BS 476 : Part 20 : 1987

UDC 614.841.332 : 620.1 : 69.01 : 699.81

© British Standards Institution. No part of this publication may be photocopied or otherwise reproduced without the prior permission in writing of BSI

British Standard

Fire tests on building materials and structures

Part 20. Method for determination of the fire resistance of elements of construction (general principles)

Essais au feu des matériaux et structures du bâtiment
Partie 20. Méthode de détermination de la résistance au feu des éléments de construction (principes généraux)

Brandschutztechnische Prüfungen an Baustoffen und Bauten
Teil 20. Verfahren zur Bestimmung des Feuerwiderstandes von Bauteilen (Allgemeines)

British Standards Institution

Licensed copy:Gravesham Borough Council, 16/03/2006, Uncontrolled Copy, © BSI

Foreword

This Part of BS 476 has been prepared under the direction of the Fire Standards Committee and describes the general procedures and equipment required to determine the fire resistance of elements of construction. This Part should be read together with BS 476 : Parts 21, 22 and 23 as appropriate which describe the detailed procedure for the testing of individual elements of construction. The four Parts taken together constitute a complete revision of BS 476 : Part 8, which is withdrawn. However, the latter will still be made available on request, since it is referred to in building regulations and other legislative documents.

Parts 20 to 23 have been prepared in such a way that Part 20 will need to be used with the subsequent Parts described.

For the purposes of these Parts, elements of construction have been categorized into three main groups:

(a) loadbearing elements that have a fire resistance;

(b) non-loadbearing elements that have a fire resistance;

(c) elements that make a contribution to the fire resistance of a structure.

The specific requirements for the testing of these groups are described in Parts 21 to 23 respectively. Guidance and background information that will assist the designer and the testing authority to select and evaluate specimens that are more representative of situations in practice are given in appendices to the four Parts.

The revision of BS 476 : Part 8 has been prepared in order to improve repeatability and reproducibility of the results obtained by more closely defining the operating procedures and the equipment used. The main changes relate to improvements in the techniques for measuring temperature, pressure and load distribution. Following the publication of PD 6496 which analysed the differences between the requirements of BS 476 : Part 8, ISO 834, ISO 3008 and ISO 3009, and Annex 1 of the preliminary draft on an EEC Commission Directive DG 111 (document 1202, September 1977) (now replaced by EUR 8750), this revision has, where possible, adopted similar requirements to those given in the international standards, though in some cases, improvements have been made. These improvements have tended to tighten up the procedures already specified in the other standards and will therefore remain in compliance with them.

One significant change in the method is the introduction of a fixed temperature/time heating regime which assumes a notional ambient temperature rather than the use of a temperature/rise curve that is related to the actual ambient temperature at the time of the test. The reasons for this change are described in appendix A.

1 In some cases, it has been requested that tests be carried out according to a so-called 'hydrocarbon curve'. Although the heating regime specified in clause 3 is the exposure condition required by this standard, in order to avoid the possible confusion which might arise due to non-availability of a standard for such temperature/time curves, appendix D includes for information a heating regime which has been proposed in ISO/DIS 834 (as a preferred option) to represent special risk requirements such as may be encountered in offshore structures, etc.'

A further change has been the adoption of the minimum specimen sizes specified in ISO 834. Combined with this is a greater acceptability of smaller furnaces for testing specimens of elements that are, at full size, capable of being tested in smaller furnaces. Because of the diversity of furnace designs it has not been possible to define the equipment more tightly, although A.5 does give guidance on the points to be considered in any future furnace designs. This Part has, however, eliminated the use of oil based fuels as a method of heating a fire resistance testing furnace.

The differential pressure between the furnace chamber and the laboratory has been changed slightly with respect to the magnitude, the time of application and the measuring technique. This has been done in an attempt to rationalize the pressure difference requirements for all elements under test.

Following the decision of the International Organization for Standardization, Technical Committee ISO/TC 92, Fire tests on building materials, components and structures, to dispense with the use of the criterion of stability (ultimate integrity) in the fire resistance testing procedures for fire doors and glazed elements (ISO 3008 and ISO 3009 respectively) it has been decided to adopt a similar principle in this revision. It is no longer required, therefore, to evaluate non-loadbearing elements (see BS 476 : Part 22) with respect to compliance with a stability requirement. In order to clarify the use of stability in respect to loadbearing elements a new term, loadbearing capacity, has been introduced in this revision (see clause 2 and appendix A). The criterion for integrity has also been slightly modified and a new term, impermeability, has been introduced in order to clarify one aspect of integrity failure.

Information on the evaluation of residual loadbearing capacity is given in appendix B.

Attention is drawn to the Health and Safety at Work etc. Act 1974, and the need to ensure that the method of test described in this standard is carried out under suitable environmental conditions to provide adequate protection to personnel against the risk of fire, and/or inhalation of smoke and/or toxic products of combustion.

Caution. The mechanical sawing of asbestos cement components attracts the provision of the Asbestos Regulations 1969. Adequate methods exist to control levels of dust during such operations and these are detailed in the Control and Safety Guides issued by the Asbestos Research Council*.

Compliance with a British Standard does not of itself confer immunity from legal obligations.

* Available from the Asbestos Information Centre, Sackville House, 40 Piccadilly, London W1V 9PA.

Licensed copy:Gravesham Borough Council, 16/03/2006, Uncontrolled Copy, © BSI

Contents

	Page
Foreword	Inside front cover
Committees responsible	Back cover

Method

0 Introduction	2
1 Scope	2
2 Definitions	2
3 Test conditions	3
4 Test specimen	4
5 Selection of support and loading conditions	5
6 Apparatus	5
7 Examination of specimen	7
8 Preparation of specimen	7
9 Test procedure	7
10 Performance criteria	8
11 Expression of results	9
12 Test report	9

Appendices

A Guidance information	10
B Evaluation of residual loadbearing capacity	18
C Operating instructions, specimen preparation and observations	19
D Hydrocarbon curve	1

Figures

1 Examples of restraint	24
2 Standard temperature/time curve	28
3 Specimen surface thermocouple junction and insulating pad	29
4 Roving thermocouple measuring junction	30
5 Typical frame for supporting the cotton pad	31
6 Steel gauges for determining imperviousness	32
7 Alternative jointing methods for walls	33
8 Pressure sensing head	34
9 Furnace thermocouple assembly	35
10 Thermocouple weight for resilient materials	36

Licensed copy:Gravesham Borough Council, 16/03/2006, Uncontrolled Copy, © BSI

Method

0 Introduction

The objective of determining fire resistance, as described in this Part and the associated Parts of BS 476, is to assess the behaviour of a specimen of an element of building construction when subjected to defined heating and pressure conditions. The method provides a means of quantifying the ability of an element to withstand exposure to high temperatures, by setting criteria by which the loadbearing capacity, the fire containment (integrity) and the thermal transmittance (insulation) functions can be adjudged.

However, the standardized temperature/time conditions used in this evaluation are representative of only one possible fire exposure condition at the fully developed fire stage and the method does not quantify the behaviour of an element, for a precise period of time, in a real fire situation (see **A.1**) and appendix D. The principle of the method is as follows.

A representative sample of the element is exposed to a specified regime of heating and the performance of the test sample is monitored on the basis of criteria described in the standard. Fire resistance of the test element is expressed as the time for which the appropriate criteria have been satisfied. The times so obtained are a measure of the adequacy of the construction in a fire but have no direct relationship with the duration of a real fire.

The test data can be used directly to show compliance with fire resistance requirements in regulations, byelaws or other safety specifications. The tests can also be used to study the behaviour of constructions at high temperatures and obtain guidance on the effect of design features on fire resistance. It is intended to extend the application of test data by agreed procedures for interpolation and extrapolation. Due to restrictions of size and the absence of surrounding construction the laboratory test cannot reproduce the actual behaviour pattern of an element in a fire. However, test data can provide a basis for making engineering evaluations. A future Part of the standard will address itself to these aspects.

1 Scope

This Part of BS 476 describes a procedure for a laboratory test for the determination of fire resistance of elements of construction.

NOTE. The titles of the publications referred to in this standard are listed on the inside back cover.

2 Definitions

For the purposes of this Part of BS 476, the definitions given in BS 4422 apply, together with the following.

2.1 associated construction. A form of construction that may be required for the testing of some elements of construction and to which the test specimen is connected, e.g. the wall into which a glazed element would be fitted.

2.2 collapse. The mechanical failure of the complete specimen that allows it to fall from the position into which it has been fixed.

2.3 fire resistance. The time for which an element of building construction is able to withstand exposure to a standard temperature/time and pressure regime without a loss of its fire separating function or loadbearing function or both.

2.4 fixity. The conditions at the edges, ends or supports of a test specimen through which the applied test load is either being applied or reacted (either directly or by induced moments).

2.5 restraint. The conditions at the edges, ends or supports of a test specimen through which the movement of the specimen is constrained. (Examples of restraint are shown in figure 1.)

2.6 furnace closure. A suitable form of construction designed to fill the space between the permanent opening of the furnace and the test construction so that the specified furnace conditions are maintained for the duration of the test without interconnection between the test construction and the furnace closure and which has no significant effect on the behaviour of the test specimen.

2.7 impermeability. The ability of a specimen of a separating element to restrict the egress of hot gases from the unexposed face of the specimen causing ignition of the cotton pad.

2.8 insulation. The ability of a specimen of a separating element to restrict the temperature rise of the unexposed face to below specified levels.

2.9 integrity. The ability of a specimen of a separating element to contain a fire to specified criteria for collapse, freedom from holes, cracks and fissures and sustained flaming on the unexposed face.

2.10 loadbearing capacity. The ability of a specimen of a loadbearing element to support its test load, where appropriate, without exceeding specified criteria with respect to either the extent of, or rate of, deformation or both.

2.11 specimen. An element of building construction provided for the purpose of determining either its fire resistance or its contribution to the fire resistance of another building element.

2.12 sustained flaming. Flaming that is visible with the naked eye and that remains visible for an uninterrupted period of not less than 10 s.

2.13 test construction. A complete assembly of a specimen and its associated construction if incorporated.

2.14 separating element. An element that is required to satisfy the criteria of integrity and insulation, in addition to loadbearing capacity if applicable, for the purposes of maintaining separation between two adjacent areas of a building in the event of a fire.

Licensed copy:Gravesham Borough Council, 16/03/2006, Uncontrolled Copy, © BSI

Licensed copy:Gravesham Borough Council, 16/03/2006, Uncontrolled Copy, © BSI

3 Test conditions

3.1 Heating conditions

3.1.1 *The standard temperature/time curve*

3.1.1.1 The temperature/time conditions (see figure 2, **A.2.1** and **A.2.2**) shall be as given by the equation

$$T = 345 \log_{10} (8t + 1) + 20$$

where

T is the mean furnace temperature (in °C);

t is the time (in min) up to a maximum of 360 min.

3.1.1.2 The mean furnace temperature (T) as given by the furnace thermocouples specified in **C.1.2** shall be controlled such that it will comply with **3.1.1.1** within the tolerances specified in **3.1.2**.

3.1.2 *Tolerances*

3.1.2.1 For the purpose of computing the percentage deviation (p), the areas under the respective temperature/time curves shall be computed (see **A.2.3**) at a minimum of the following time intervals:

0 min to 10 min at 1 min intervals
10 min to 30 min at 2 min intervals
30 min to 120 min at 5 min intervals
120 min to 360 min at 10 min intervals

Any deviation calculated in accordance with **3.1.2.2** shall be within the following limits:

(a) less than 15 % to the end of the first 10 min of the heating period or to the end of the test if this is less than 10 min;

(b) less than 10 % from 10 min to the end of the first 30 min of the heating period or to the end of the heating period if this is greater than 10 min but less than 30 min;

(c) less than 5 % from 30 min to the end of the heating period.

3.1.2.2 The percentage deviation (p) in area of the mean furnace temperature/time curve from the standard temperature/time curve is given by:

$$p = \frac{A - B}{B} \times 100$$

where

A is the area under the mean furnace temperature/time curve;

B is the area under the specified temperature/time curve.

3.1.3 *Uniformity of temperature distribution.* At any time after the first 10 min of the heating period, the temperature rise indicated by any of the thermocouples used to determine the mean furnace temperature shall not differ from the corresponding temperature rise given by the standard temperature/time curve by more than 100 °C.

With test constructions where either the specimen or any associated construction incorporates combustible materials that produce flaming within the furnace which can be identified to be causing localized heating or cooling of one or more of the furnace thermocouple hot junctions, the deviation of temperature rise recorded by that or those thermocouples so affected from the standard temperature curve shall not exceed 200 °C.

3.2 Pressure conditions

3.2.1 *General.* After the first 5 min of the heating period and for the remainder of its duration, a positive pressure relative to the laboratory shall be established within the furnace. This pressure shall be controlled to satisfy the requirements specified in **3.2.2** and **3.2.3** for the respective elements (see **A.2.4**).

3.2.2 *Separating elements.* The test construction shall be subjected to a pressure condition similar to that which would apply if a linear pressure gradient of 8.5 Pa per 1000 mm height is assumed to exist together with a neutral pressure axis at a height of approximately 1000 mm above the notional floor level. The pressure at any position on a vertical test construction and on the underside of a horizontal test construction shall be determined with respect to the elements positional height relative to notional floor level. The pressure condition shall be controlled to within ± 2 Pa. Notwithstanding the above, the pressure at the top of a vertical test construction and at the underside of a horizontal test construction shall at no time exceed a maximum value of 20 Pa.

3.2.3 *Non-separating elements.* Non-separating elements shall be subjected to similar pressure conditions as appropriate to separating elements with the same orientation, i.e. beams as per floors, columns as per walls.

NOTE. The neutral pressure axis for vertical non-separating elements may be at a height of up to 2000 mm (see clause **3** of BS 476 : Part 21 : 1987).

3.3 Ambient conditions within the laboratory

3.3.1 The ambient air temperature, as measured by the ambient temperature thermometer specified in **C.1.1**, in the general vicinity of the test construction shall be within 5 °C to 35 °C immediately prior to the heating period (see **A.2.5**, **C.7.3.2** and **C.7.3.3**).

3.3.2 For tests on separating elements where measurements of the unexposed face temperature rise are made in order to determine compliance with **10.4**, the following additional requirements shall apply:

(a) 30 min prior to the commencement of the test, the mean unexposed face temperature as indicated by the thermocouples specified in **6.4.2.1** shall be within 5 °C of the ambient temperature, but shall be not less than an actual temperature of 5 °C;

(b) during the course of the heating period the ambient temperature shall not increase above its initial value by more than 5 °C up to the time of insulation failure;

(c) measurements shall be made in essentially draught free conditions.

3.3.3 For tests on separating elements where the unexposed face temperature is only being determined for other reasons, e.g. for determining the time at which to discontinue the use of the cotton pad (see **10.3.2**), the conditions (a) and (c) specified in **3.3.2** shall be complied with but the temperature rise in (b) is permitted to increase by 15 °C.

Licensed copy:Gravesham Borough Council, 16/03/2006, Uncontrolled Copy, © BSI

3.4 Loss of accuracy

Where the mean furnace temperature, pressure conditions and ambient conditions in the laboratory create more severe conditions than those specified in **3.1**, **3.2** and/or **3.3**, the actual test result achieved may still be accepted as valid (see items (g), (k) and (m) of clause **12** and **A.2.7**).

4 Test specimen

4.1 General

The test specimen and any associated construction forming a test construction shall be identical to, or representative of, the element of building construction that is to be evaluated. The specimen and any associated construction shall not be in such a state at the start of the test that the specimen would fail the permeability criteria as defined by the use of the gap gauges (see **10.3.2**(b)).

NOTE. The choice of the associated construction may be significant to the performance of the test specimen, and reference should be made to the guidance notes given in the appendices of BS 476 : Parts 21 to 23 relevant to the element under test.

The test construction only represents the element of construction when the conditions of load, restraint and fixity used during the test are identical to, or typical of, those used in practice. If information is required to determine the behaviour of the construction under different end or edge conditions or to determine the effect of special aspects of the construction, which are not an essential or integral part of the element, then additional test(s) shall be carried out.

4.2 Design considerations

The test construction shall be designed so that the critical aspects of the element are incorporated in the specimen (see **A.3.1**). In designing a specimen and its associated construction the influence of joints, incorporated services, finishes, openings for access and vision, etc. shall be considered. Unless evidence exists indicating that these features will not have a deleterious effect, they shall be incorporated in the construction to be tested.

The influence and interactions between the element of construction and its adjacent supporting construction shall be carefully considered such that any associated construction used in conjunction with the test specimen shall have similar influences as in practice.

4.3 Manufacture of the test construction

All materials and constructional methods used in the manufacture of the test construction shall be representative of the intended use of the element, and shall be described in the report (see **A.3.2**).

If it is necessary to modify an element in order to produce a construction that will fit into the furnace or to facilitate an evaluation of a particular design feature, then full details of the design of the specimen and details of the modifications made shall also be included in the report.

The properties of any material component used in the test construction that have a significant effect on the fire resistance of the specimen shall be reported. The report shall include either the source of the information, or if particular properties are measured details of the method used (see **A.3.3**).

4.4 Number of specimens

For non-separating elements, separating elements that are only required to resist fire from one side in use, and for vertical symmetrical separating elements, one specimen shall be tested (see **A.3.4**).

For vertical asymmetrical separating elements that are required to resist fire from either side, the element shall be tested from each side using a separate specimen. However, if it is possible to ascertain the direction of exposure that will give the lesser fire resistance, one test may be carried out exposing the specimen to the furnace in its anticipated weaker direction, in which case the reasons for this shall be clearly stated in the report.

4.5 Size of specimen

Whenever possible, the test specimen and where appropriate any associated construction shall be a full sized element of building construction. Unless it is impossible, the individual components making up a test specimen shall be full size (see **A.3.5**).

When the element exceeds the size that can be accommodated by the furnace, the minimum size of element exposed to the heating conditions in the furnace shall be:

non-separating elements:	vertical	3 m high
	horizontal	4 m span
separating elements:	vertical	3 m high by 3 m wide
	horizontal	4 m span by 3 m wide

When the element, and hence the specimen, is smaller than the aperture available in the appropriate furnace, either an associated construction shall be provided with the specimen of such dimensions to give a test construction of the necessary size or furnace closures of the requisite size shall be used.

4.6 Condition of the test construction

When a test construction incorporates materials that are either time or moisture sensitive, these materials shall, at the time of test, be at a condition approximating to the state of strength and moisture content that would be expected in normal service.

NOTE. Where this is not known or cannot be achieved, the moisture content levels given in **A.3.6** should be used.

The moisture content of hygroscopic materials and the state of time sensitive materials shall, where accessible, be determined prior to test and shall be quoted in the test report together with the method used for their determination.

When it is not practicable to ascertain the condition of component material(s) of a test specimen, e.g. fully encapsulated materials, the report shall state that the condition has not been determined.

5 Selection of support and loading conditions

5.1 For non-loadbearing elements the test construction shall be mounted as realistically as possible using the fixing details employed in practice (see **A.4.1**).

5.2 For loadbearing elements, the condition at the ends or edges of the test construction through which the test loading is applied or reacted shall be selected to ensure that they represent the condition applicable to the element in practice. Any fixity shall be taken into account in calculating the test loading and, where possible, provision shall be made to measure the extent of any fixing moments or loads achieved. For loadbearing elements, those edges or ends through which no load is transmitted shall be totally unrestrained.

5.3 When the test construction is representative of a loadbearing element, it shall be subjected to a test loading (see **A.4.2**). The basis for selecting the test loading and the magnitude and direction of the loading shall be clearly stated in the report.

When an element in use is larger than the specimen for test, the nature, magnitude and the distribution of the test loading shall be carefully selected in order to subject the test construction to critical stress levels of the same nature and magnitude as those likely to be encountered by the element in practice. If the magnitude and the distribution of the load is different from that used in practice in order to achieve these requirements, the relationship between the stresses generated by the test loading and the stresses experienced by the element in use shall be explained in the test report.

6 Apparatus

6.1 *Furnace*

NOTE. All dimensions given in the description of the furnace and its associated equipment are nominal unless tolerances are specified.

6.1.1 The furnace shall be of a design (see **A.5.1**) appropriate to the type of specimen being tested, as to allow:

(a) vertical separating elements to be exposed to the heating and pressure conditions on one face;

(b) horizontal separating elements to be exposed to heating and pressure conditions from the underside;

(c) beams normally to be exposed to the heating and pressure conditions on three faces, i.e. the soffit and two sides, but provision should be made to enable beams to be tested with all four faces exposed;

(d) free standing columns to be exposed to the heating and pressure conditions equally on all four faces.

6.1.2 The furnace shall be able to accommodate the full sized element of construction or the minimum size of test construction specified in **4.5** where the element is of a larger size. Reduced size furnaces can be used for testing small, but full sized elements. Where a reduced size furnace is used (i.e. a furnace with an opening not greater than 1.5 m x 1.5 m), the furnace aperture shall be greater in area than the exposed face of the specimen by a ratio of at least 1.5:1. The additional area between the element and the furnace aperture shall be filled by means of an associated construction or a furnace closure as appropriate.

6.1.3 Vertical furnaces shall have a chamber depth, i.e. the distance between the exposed face of the specimen and the face of the furnace lining immediately opposite the specimen, of not less than 600 mm and not more than 1300 mm excluding any areas where flues or other openings enter the furnace chamber. The total area of such flues and other openings shall not exceed 25 % of the surface area of the wall in which they occur. Furnaces for testing columns shall have a minimum horizontal dimension of 1.4 m.

6.1.4 Horizontal furnaces shall have a chamber depth, i.e. the distance between the soffit of the floor or the beam and the face of the furnace floor below, of not less than 1000 mm and not more than 2000 mm excluding any areas where flues or other openings enter the furnace chamber. The total area of such flues and other openings shall not exceed 33 % of the floor area.

NOTE. For smaller furnaces a small reduction in furnace depth to less than 1 m may be satisfactory provided uniform heating of the specimen can be obtained.

6.1.5 The furnace shall be heated with burners that are fired using either natural gas or liquefied petroleum gases. The heat output of the burners shall be controllable and shall be sufficient to expose the specimen to the heating and pressure requirements specified in **3.1** and **3.2** respectively.

NOTE. The mixture of fuel and air to each burner should be nominally constant over the burner's operating range.

The furnace shall be provided with exhaust ports connected to a suitable exhaust gas handling and control system that allows control of the furnace pressure to comply with **3.2**.

6.1.6 The furnace shall be provided with thermocouples and linked to associated temperature measuring devices as specified in **C.1.2** and **C.2.2.2** for determining the temperatures at specified positions in the furnace as described for each type of specimen tested (see BS 476 : Parts 21 to 23).

6.1.7 The furnace shall be provided with a pressure sensing probe as specified in **C.1.3** situated within the furnace at a specified position as described for each type of specimen evaluated (see BS 476 : Parts 21 to 23). The pressure sensing probe shall be connected to a furnace pressure indicator (see **C.2.2.3**). The measurement of the static pressure within the furnace shall be made relative to the static pressure outside the furnace.

6.1.8

Licensed-copy:Gravesham Borough Council, 16/03/2006, Uncontrolled Copy, © BSI

Licensed copy:Gravesham Borough Council, 16/03/2006, Uncontrolled Copy, © BSI

In order to define the start of the test the temperature shall be continuously indicated and the display shall be clearly visible to the furnace operator for the purpose of starting the timing device.

A timing device complying with **C.2.3** shall be available for the furnace operator.

6.1.9 The furnace shall be located in a room of adequate size to allow easy access to the furnace and its associated equipment and safe handling of specimen constructions.

6.2 *Loading equipment*

6.2.1 *General.* The method of applying the test loading to the specimen shall be either by dead weights or by a hydraulic or mechanical jacking system, or by a combination of dead weights and a jacking system. The choice shall normally be dictated by practical convenience, considering the type of element and the type and magnitude of the loading required. Irrespective of the method chosen, the method of loading shall not significantly affect the natural thermal behaviour of the specimen. Similarly, the method of loading shall not limit the movement of the specimen nor in any other way influence the natural mechanical behaviour of the element.

6.2.2 *Dead-weight loading.* The uniformly distributed loading shall be simulated by at least four nominally equal point loads on every square metre of the specimen. The accuracy of the individual weights shall be within ± 2.5 % of their nominal value and they shall contact the surface of the specimen via legs that will not unduly impair the performing of such monitoring checks as are appropriate, e.g. the use of the cotton pad or the roving thermocouple. The total area of the contact points between the dead weights and the test specimen surface shall not exceed 10 % of the total area of the surface of the test specimen. The individual contact areas shall not be so small that they cause excessive localized stresses. The distribution of dead weights over the surface of a specimen shall be as uniform as possible.

For beams, the maximum value of any single dead weight (in kN) used to simulate a uniformly distributed load shall not exceed 25 % of the required uniformly distributed loading (in kN/m).

The loading of vertical separating elements shall not be applied by means of dead weight unless the value of the applied load is so low that the use of mechanical or hydraulic loading systems is impracticable.

6.2.3 *Mechanical or hydraulic loading.* The loading system shall be designed such that the loads are applied gradually to avoid shock loads and the direction and the magnitude of the force exerted by each individual loading unit remains constant (i.e. ± 2 % as specified in **9.1.2**) throughout the duration of the test and is not changed by the deformation of the specimen. For horizontal elements, articulation and/or freedom for movement of the contact position shall be provided, either at the point of application of the loading or the ie the loading distribution system.

The load shall be applied uniformly over the surface so that at any single point the load does not exceed 10 % of the total load.

For beams that are hydraulically or mechanically loaded to simulate the uniformly distributed load, the load shall be applied by at least four nominally equal points.

NOTE. When vertical separating elements are carrying a uniformly distributed load, the required total load may be applied through a suitable spreader beam.

When the element contains discrete loadbearing members, the loading system shall be designed so as to ensure that significant load sharing does not occur.

For horizontal elements, the mechanical or hydraulic loading system shall be capable of following a maximum rate of deformation of the test specimen of 50 mm/min with a maximum deformation of 250 mm. For vertical elements, the system shall be capable of following a maximum rate of deformation of 25 mm/min with a maximum deformation of 120 mm.

6.3 *Specimen support systems*

6.3.1 *Provision of restraint.* Any framework used to apply restraint at the edges or the ends of the test specimen shall have sufficient rigidity and stiffness to resist the forces exerted by any thermal movement induced during the test. It shall have provision for allowing the specimen edges or ends to be fixed in a manner representative of that used in practice.

6.3.2 *Loading and fixity.* Where the loading system requires the applied test loading to be reacted back to the specimen support positions, the furnace and/or the support/reaction frame shall have sufficient strength and stiffness to resist any distortion that may affect the performance of the test specimen or that may modify the applied loading.

6.4 *Instrumentation*

6.4.1 *Measuring and control equipment*, to monitor the test construction, the laboratory and the furnace environment and the behaviour of the test sample during the test.

NOTE. Details of the instrumentation needed for the measurement of temperature, pressure and load are given in appendix C.

6.4.2 *Monitoring equipment*

6.4.2.1 *Fixed specimen surface thermocouples*, constructed as shown in figure 3, and consisting of either type T type N or type K thermocouple wires complying with BS 4937 : Part 4 or 5, with a maximum diameter of 0.5 mm, brazed to a 12 mm diameter, 0.2 mm thick copper disc. Each thermocouple shall be provided with a 30 mm square, 2 ± 0.5 mm thick pad of insulation material. This insulation material shall have a dry density of 900 ± 90 kg/m^2, a thermal conductivity of 0.13 W/(m·K) ± 10 % at 100 °C, and shall be of a material capable of withstanding temperatures of 400 °C without any change in mechanical or physical properties. The insulation pads shall be slotted or provided with holes to accommodate the thermocouple wires.

The wires from the thermocouples shall be connected either directly or via compensating leads to an appropriate temperature indicator (see **C.2.2.4**).

Licensed copy:Gravesham Borough Council, 16/03/2006, Uncontrolled Copy, © BSI

6.4.2.2 *Roving surface thermocouple*, with a measurement junction consisting of either type T type N or type K thermocouple wires complying with BS 4937 : Part 4 or 5, with a diameter of 1.0 mm, brazed to a 12 mm diameter, 0.5 mm thick copper disc (a copper/constantan wire thermocouple with a diameter of 0.5 mm may also be used). The wires of the thermocouple shall be bent normal to the rear face of the copper disc to allow them to be inserted into separate holes in a porcelain insulator as shown in figure 4. The porcelain insulator shall have a diameter of 6 mm to 10 mm and shall contain two holes of approximate 2 mm diameter. The distance between the rear face of the copper disc and the end of the insulator shall be 6 ± 1 mm.

The wires from the thermocouple shall be connected to an appropriate temperature indicator (see **C.2.2.5**).

6.4.2.3 *Cotton pad*, used for monitoring of permeability and consisting of new, undyed and soft cotton fibres, without any admixtures of man-made fibres, and shall be 100 mm square by 20 mm thick and shall have a mass of between 3 g and 4 g. It shall be dried in an oven at 105 ± 5 °C for at least 30 min and then stored in a desiccator to cool and until ready for use.

It shall be placed, immediately prior to use, in the wire holder shown in figure 5.

6.4.2.4 *Gap gauges* (as shown in figure 6), used for monitoring of impermeability. They shall be made of steel rod of the diameter specified to an accuracy of ± 0.5 mm. They shall be provided with handles that are of sufficient length to ensure operator safety without detracting from the accuracy and care which may be needed in determining the point of any failure.

6.4.2.5 *Deformation measuring devices*, for measuring deformation of the test specimen having a range sufficient to take account of any deformation due to the initial application of the test load, any creep experienced under the test load prior to the heating period, and any deformation that occurs during the heating period. The measurement shall be accurate to ± 1 mm.

Provision shall normally be made for the measured deformation to be indicated and recorded remote from the test specimen. The deformation indicated by the devices shall be displayed continuously or updated at intervals not exceeding 15 s. The deformation shall be displayed and logged at 1 min intervals from the commencement of the heating period, on the minute, for calculation of the rate of deformation of the specimen.

6.4.2.6 *Radiometer.* The radiometer shall be capable of measuring irradiance within the range 0 to 100 kW/m^2. The time constant shall be not more than 3 s (corresponding to a time to reach 95 % of final output in not more than 10 s). The instrument shall normally be calibrated with the target vertical in which case the sensitivity shall not change by more than 1 % when the instrument is used with the target horizontal. The target receiving radiation shall be circular, flat, not more than 10 mm diameter, and coated with a durable matt black finish. The target shall be within a water or air cooled body whose front face shall be flat and coincident with the plane of the receiving face of the target. Radiation shall not pass through any window before reaching the target. The instrument shall be robust, simple to set up and use, insensitive to draughts and stable in calibration. The instrument shall have an accuracy of within ± 3 % and a repeatability within ± 0.5 %.

The output from the radiometer shall be measured on an appropriate millivolt measuring device (see **C.2.2.6**).

6.4.2.7 *Specimen internal thermocouples*, for measuring internal temperatures.

NOTE. Determination of internal temperatures is not required. When these are to be determined for information purposes, the guidance given in **A.6.2.5**, **A.8.2** and **C.4.1.3** should be followed.

6.4.2.8 *Recording and ancillary equipment*, required for the following purposes:

(a) furnace temperature;
(b) furnace pressure;
(c) specimen interior temperature;
(d) fixed and roving furnace temperature devices;
(e) radiation measuring devices;
(f) timing devices.

NOTE. The type of equipment suitable for such purposes is described in **C.2**.

7 Examination of specimen

A full and detailed specification of the test specimen shall be provided by the test sponsor prior to the installation of the test specimen at the laboratory. This specification shall be to a level of detail sufficient to allow the laboratory to conduct a detailed examination of the specimen in accordance with **C.3** before the test and to agree with the sponsor the accuracy of the specimen specification.

NOTE. **A.7** provides guidance on the important characteristics to be noted.

8 Preparation of specimen

The procedure for fixing thermocouples, installing the specimen, applying restraint, measurement of radiation and other essential steps to be taken before a test can be undertaken shall be as given in **C.4**.

9 Test procedure

9.1 General

NOTE. The procedure for conducting the test and measurements and observations to be made during the course of the test are defined in **9.1.1** to **9.1.3** and details are described in **C.9** to **C.11**.

9.1.1 *Ambient temperature measurements.* Measure the ambient temperature, using the ambient temperature thermometer or thermocouple. Do not commence heating until the ambient temperature is within the specified limits.

9.1.2 *Application of the test loading.* For loadbearing elements, apply the test loading in such a way as to obtain stable conditions not less than 15 min before the

commencement of the heating period. Maintain the load constant within ± 2 % until the test is terminated.

9.1.3 *Establishment of datum values.* Not more than 15 min before the commencement of heating take and record datum values for each individual temperature measurement, deflection measurement and any other supplementary measurement, e.g. radiation.

9.2 Heating procedure

Commence heating of the specimen and control the furnace temperature to comply with **3.1** and the furnace pressure to comply with **3.2**.

9.3 Monitoring of criteria

Throughout the heating period monitor the behaviour of the specimen for compliance with the relevant criteria in clause **10** and the appropriate clauses of BS 476 : Part 21, 22 or 23.

9.4 Other observations

Monitor and record any significant deflection of the specimen even when not required as a criteria for failure. Monitor and record the radiation flux emitted from the unexposed face of separating elements using the radiometer specified in **6.4.2.6** (see **A.9.4**).

9.5 Termination of test (see also A.9.5)

9.5.1 Continue heating until failure occurs under one or more of the relevant performance criteria or at a time agreed between the sponsor and the test laboratory. If the heating is terminated before failure, the duration of heating is deemed to be the fire resistance of the specimen.

9.5.2 For non-loadbearing constructions, terminate the test at the end of the heating period.

9.5.3 For loadbearing constructions, terminate the test at the end of the heating period.

NOTE. An evaluation of the residual loadbearing capacity may be carried out in which case terminate the test following completion of the procedure described in appendix B.

10 Performance criteria

10.1 General

The fire resistance of the test construction shall be assessed against one or more of the criteria for loadbearing capacity, integrity and insulation, whichever are relevant to the elements used in practice (see **A.10** and BS 476 : Parts 21 to 23).

10.2 Loadbearing capacity

10.2.1 *General.* A failure of the test construction to maintain its loadbearing capacity (see **2.10**) shall be deemed to have occurred when any of the requirements specified in **10.2.2** and **10.2.3** are exceeded.

10.2.2 *Loadbearing vertical elements.* Failure of the test construction shall be deemed to have occurred when the specimen fails to support the test loading (see **A.10**).

10.2.3 *Loadbearing horizontal elements.* The test specimen shall be deemed to have failed if it is no longer able to support the test load. For the purposes of this standard, this shall be taken as either of the following, whichever is exceeded first:

(a) a deflection of $L/20$; or

(b) where the rate of deflection (in mm/min), calculated over 1 min intervals, starting at 1 min from the commencement of the heating period, exceeds the limit set by the following equation:

$$\text{rate of deflection} = \frac{L^2}{9000d}$$

where

L is the clear span of specimen (in mm);

d is the distance from the top of the structural section to the bottom of the design tension zone (in mm).

However, this rate of deflection limit shall not apply before a deflection of $L/30$ is exceeded.

NOTE. *Residual loadbearing capacity.* The residual loadbearing capacity of both vertical and horizontal loadbearing test constructions may be determined following the procedure described in appendix B.

10.3 Integrity

10.3.1 *General.* A failure of the test construction to maintain integrity shall be deemed to have occurred when collapse or sustained flaming on the unexposed face occurs or the criteria given in **10.3.2** for impermeability are exceeded (see clause **2**).

10.3.2 *Impermeability.* Failure shall be deemed to have occurred when one or other of the following conditions prevail.

(a) For situations where the cotton pad (**6.4.2.3**) is suitable (see **C.10.3.2**), failure shall be deemed to have occurred when flames and/or hot gases cause flaming or glowing of the cotton fibre pad.

(b) For situations where the use of the cotton pad is not suitable, failure shall be deemed to have occurred when either:

(1) the 6 mm diameter gap gauge can penetrate a through gap such that the end of the gauge projects into the furnace and the gauge can be moved in the gap for a distance of at least 150 mm; or

(2) the 25 mm diameter gap gauge can penetrate a through gap such that the end of the gauge projects into the furnace.

10.4 Insulation

Failure shall be deemed to have occurred when one of the following occurs:

(a) if the mean unexposed face temperature increases by more than 140 °C above its initial value;

(b) if the temperature recorded at any position on the unexposed face, either by a fixed thermocouple (see **6.4.2.1**) or by the roving thermocouple subject to the following provisions (see **6.4.2.2**) is in excess of 180 °C above the initial mean unexposed face temperature;

(c) when integrity failures as defined in **10.3** occur.

Licensed copy:Gravesham Borough Council, 16/03/2006, Uncontrolled Copy, © BSI

Temperatures measured by the roving thermocouple placed on a flat surface that has a minimum 12 mm diameter flat surface to which the disc can be applied shall be included in the evaluation of maximum temperature criterion.

Temperatures measured by the roving thermocouple, placed on small features that have a minimum 6 mm diameter flat surface, shall only be used in the evaluation of the maximum temperature criterion if the aggregate area of this or these features exceeds 0.1 % of the specimen surface area within any 1 m^2 of surface area.

11 Expression of results

△1 **11.1** The test results shall be stated in terms of the elapsed time, rounded down to the nearest minute, between the commencement of heating and failure under one or all of the criteria given in clause **10**. If no integrity or insulation failure occurred in a separating element during the heating period, then the times stated for these criteria shall be the elapsed time between the commencement and the termination of the heating.

11.2 With respect to the loadbearing capacity of a loadbearing specimen, the time stated shall be the elapsed time between the commencement of heating and the termination of heating or failure to meet the loadbearing capacity criterion whichever is the sooner.

11.3 In no case shall the period taken for insulation failure to occur exceed the period given for integrity failure to occur.

NOTE. An example of the method of expressing the results is given in **A.11**.

11.4 The results of the test shall be contained in a test report as specified in clause **12**.

NOTE. In the event of the test being performed to determine the residual loadbearing capacity of a test construction, a supplementary report should be prepared as stated in appendix B.

12 Test report

The test report shall include the following information.

(a) The name of the testing laboratory.

(b) The name of the sponsor.

(c) The date of the test.

(d) The name of the manufacturer and the trade name, if any, of the specimen and any of its component parts, if known. If unknown, this shall be stated.

(e) The construction details, materials used, dimensions and condition of the assembly as tested, with detailed drawings noting, where appropriate, any modifications made to the element in order to manufacture a test construction (see **4.3**).

(f) The important physical properties of materials or components, including the condition and the means by which this was achieved, together with each source of information. Where it proved impracticable to measure any of these properties, this shall be reported (see **4.6**).

(g) The ambient temperature of the test area at the commencement of the test.

(h) For asymmetrical separating elements, the direction in which the specimen was tested and the reason for this choice.

(i) The test loading, if any, and its relation to the design conditions.

NOTE. This should include the method of loading.

(j) The fixity and restraint conditions that applied to the test construction during the test.

(k) The overpressure conditions within the furnace related to the position of the test construction.

(l) The reasons validating the test in the event of the tolerances on the temperature/time curve, pressure conditions or ambient laboratory conditions being inadvertently exceeded (see **3.4**).

(m) Temperature/time graphs of the furnace heating conditions (see **A.2.3**).

(n) The fire resistance when adjudged by the appropriate criteria as given in clause **10**, and expressed as specified in clause **11**, including:

(1) the rate of deflection when this is the criterion used to assess loadbearing capacity, including the value of *d* used in calculating the limiting rate;

(2) the maximum deflection and the time and position at which it occurred, supported by adequate graphical data;

(3) the mode of failure with respect to all criteria, but especially in respect to loss of loadbearing capacity;

(4) temperature/time graphs of unexposed face temperatures;

(5) the position(s) at which the maximum temperature rise was measured should this be the cause of failure with respect to insulation;

(6) the time at which the cotton fibre pad was discontinued in favour of gap gauges;

(7) if recorded, the irradiance with respect to time with details of positioning/screening of radiometers (see **A.9.4**);

(8) if recorded, the temperature of any internal components or cavities;

When a test is terminated before the occurrence of failure under any of the relevant criteria, this shall be stated.

(o) The following statement:

'The results only relate to the behaviour of the specimen of the element of construction under the particular conditions of test; they are not intended to be the sole criteria for assessing the potential fire performance of the element in use nor do they reflect the actual behaviour in fires.'

Licensed copy:Gravesham Borough Council, 16/03/2006, Uncontrolled Copy, © BSI

Appendices

Appendix A. Guidance information

A.1 Application of method

The rate at which a fire develops and the temperatures reached are highly dependent upon the size and nature of the fire load (the materials within the fire compartment), the oxygen supply available to feed the fire and the shape and size of the compartment. From this it can be seen that it is impossible for any method to simulate a real fire situation. Experience has shown, however, that elements that have not failed the appropriate performance criteria given for an appropriate period of fire resistance are rarely the cause of catastrophic failure in the real fire environment.

In certain industrial processes where the nature of the fuel load is different, e.g. petrochemicals, the standard method is less applicable and, as a result, different temperature/time relationships are used for evaluating the structure. These test conditions should, however, only be used in the context of evaluating buildings that are known to be housing processes or materials for which the modified heating regime was designed.

If one considers the limitations that the furnace imposes on the size of the element that can be evaluated it will be recognized that many elements can only be tested at a fraction of their design size. The designer should therefore consider the result obtained from a fire resistance test in the context of the total building design. Whilst every effort is made during the test to reproduce the restraint conditions that apply to the element in use, this often has to be simplified when compared with the complex nature of such forces in a building.

It is important that the design of the specimen takes account of these considerations and it may be necessary that more than one test will be required to sufficiently characterize the fire performance of an element of building construction.

A.2 Furnace temperature and pressure conditions

A.2.1 General

The fire environment simulated in the furnace is a simplification of the real conditions that exist in a fire within an enclosed room. In this standard, the temperature and pressure conditions are specified but no requirements have been given for oxygen content in the furnace environment. In real fires, the actual magnitude and variation of these parameters will be dependent upon several interrelated factors, some of which are:

(a) the amount and type of combustible materials in the room (the fire load);

(b) the distribution of the fire load in the room;

(c) the configuration of the fire load;

(d) the amount of air supplied to the room;

(e) the geometry of the room;

(f) the thermal characteristics of the structures which enclose the fire chamber or are contained within it.

A.2.2 Heating regime

The heating of the furnace is specified in terms of a temperature/time relationship which is given by the following equation:

$$T = 345 \log_{10} (8t + 1) + 20$$

This equation is slightly different from the equation given in BS 476 : Part 8, and ISO 834, in that it gives the furnace temperature in terms of actual temperature and not temperature rise. It has been assumed that the furnace temperature at commencement of the fire test is 20 °C, irrespective of its actual value, so that all furnaces will operate to the same actual temperature/time programme. The actual initial furnace temperature is required to be within the limits of 5 °C to 35 °C.

The change to the use of actual temperature as a basis of the temperature/time programme is to enable closer correlations in performance to be achieved on elements whose performance is very much temperature sensitive (e.g. glass). Also, with the use of critical temperatures as a basis for assessment and calculation of fire resistance, it is logical to have both the temperature of the element and the temperature of the heating environment expressed in the same terms. With the previous basis of operating to a temperature rise, a possible 30 °C difference in the initial furnace temperature between tests is maintained throughout the test duration.

A.2.3 Temperature/time tolerances

A more precise definition of the application and method of calculation of the tolerances on the furnace temperature/time programme has been given in **3.1.1.1** than in the previous edition of the standard. A requirement has been included on the distribution of temperature within the furnace, and advice is given about the course of action to be taken if the test conditions do not comply with the required tolerances.

The area under the time/temperature curve $A_{t,0}$ can be estimated by using a mechanical integrating device such as a planimeter. If such a device is not available approximations can be obtained by 'counting squares' or by numerical approximations.

One such method of approximation is known as the Trapezoidal Rule which is given by:

$$A_{t,0} = \tfrac{1}{2} (T_0 + T_t) + \sum_{n=1}^{n=(t-1)} T_n$$

where

t is the time (in min) at which the temperature T is measured;

T_0 is the initial temperature (in °C);

T_t is the temperature at t (i.e. at the end of the test) (in °C);

T_n is the temperature at a given time (in min).

A more accurate and widely used approximation is given by Simpson's Rule:

Licensed copy:Gravesham Borough Council, 16/03/2006, Uncontrolled Copy, © BSI

$$A_{t,0} = {}^1/_3\ (T_0 + 2\,\Sigma\,T_{odd} + 4\,\Sigma\,T_{even} + T_t)$$

where

T_0 is the initial temperature (in °C);

T_{odd}, T_{even} are the temperature measurements at alternate time increments (in min);

T_t is the temperature at t (i.e. at the end of the test) (in °C).

On both of these examples it is assumed that the temperatures used are sampled at 1 min intervals. If a wider time interval is used, for instance to calculate the area in the later stages of the test, it is important to note that the result has to be multiplied by the number of time units in the interval, and that all the intervals within a summation have to be of equal width.

A.2.4 Pressure conditions

Generally, the distribution of pressure over the height of a vertical furnace is a function of the furnace design and is dominated by the natural buoyancy effect of the hot gases. In a simple closed box type design the pressure gradient will be approximately 8.5 Pa (0.85 mm of water-gauge) per metre height of the furnace, and although control of the furnace damper allows the actual value of pressure to be changed, there is little that can be done to alter the gradient. The pressure experienced by an element in a real fire will depend upon its height relative to the normal floor level.

If for example, a panel of glazing is normally installed in a wall such that the head of the panel is 2.8 m above floor level, then it would be anticipated that the top of the element would be subjected to an overpressure of 15.3 Pa, assuming that the neutral pressure axis exists approximately 1 m above floor level. A specimen of such an element should therefore be installed in the vertical face of a furnace such that a positive pressure of 18 Pa exists at the head of the element.

This would not necessarily coincide with a height of 2.8 m above furnace floor level but it would coincide with a height of 1.8 m above the furnace neutral pressure axis subject to 20 Pa maximum limit.

The overpressure requirements have been extended to apply to non-separating elements on the basis that gas circulation within a hollow box type protection system and other specimens which incorporate air spaces may be affected by this condition.

A.2.5 Ambient conditions

A.2.5.1 Because of the large variation in ambient conditions experienced within a fire laboratory and also between fire laboratories, wide temperature tolerances on the ambient temperature have been allowed. It is important that reasonable equilibrium is established between the surface temperatures of the specimen and the ambient temperature of the laboratory, and that there is no significant change in the surrounding ambient conditions which might affect the heat loss from the unexposed face of a specimen.

A.2.5.2 The standard requires that the sensing element be protected from localized environmental effects. Two concentric lengths of plastics pipe provide adequate screening of the sensing element, nominally 100 mm and 150 mm in diameter.

A.2.6 Oxygen content

No requirement has been placed on the oxygen concentration within the furnace during the test, but it is acknowledged that this could be an important factor on the performance of combustible specimens and is known to be a significant factor in the cotton wool pad test for integrity. Whilst nothing is specified, it is recommended that laboratories should investigate the measurement of oxygen concentrations during a test and should ensure that these are maintained at between 5 % and 10 %.

A.2.7 Acceptability of the test

When the accuracy of control of the furnace temperature, pressure conditions and ambient conditions in the laboratory require an assessment of acceptability (see **3.4**) the conduct of the test and conditions pertaining during the test may be such that the test result is acceptable to both the laboratory and test sponsor. If this is the case the the basis of such a decision should be reported in the test report.

A.3 Specimen construction and preparation

A.3.1 Design of specimen

The design of the test specimen is of paramount importance if the fire resistance rating of the specimen is to be widely applicable. An analysis of almost any element will reveal features that are more critical to the fire performance than the other features. Joints between individual components making up an element are an obvious weakness in the fire behaviour. Such joints may be designed into the element in order to facilitate such functions as expansion movements, whereas other joints may only occur in protective claddings and linings that are manufactured from sheet materials smaller than the structure to be protected. When considering the inclusion of joints in a protective lining, the position and the number of joints is also critical. As an example, figure 7 shows two alternative ways that joints may be included in the evaluation of a single storey partition. It is likely that the two arrangements shown would give different performances under test and it should be decided, during the specimen design stage, which method is most appropriate to the element under test.

The jointing arrangement shown in figure 7(a) is likely to have a wider applicability than that shown in figure 7(b) as the conditions applying to the central board are closer to those that would be found in practice in a longer run of partitioning.

Less obvious features that may be critical to the performance of an element include changes in the depth of concrete cover to the steel reinforcement in a beam or floor slab, changes in the thermal inertia of protection to steelwork and the disturbance of built-in insulating materials by fittings or services. All possible variations

Licensed copy:Gravesham Borough Council, 16/03/2006, Uncontrolled Copy, © BSI

Licensed copy:Gravesham Borough Council, 16/03/2006, Uncontrolled Copy, © BSI

should be considered during the design of the specimen and the worst case situations should be included in the test construction. It may of course be necessary to test more than one specimen as the incorporation of too many critical features in a single specimen may lead to a totally unrepresentative construction.

A.3.2 Construction of specimen

All aspects of the construction of the element should be considered in the construction of a specimen. For example the number of fixings used in securing components and/or materials should be identical in both the specimen and the element and where the method of making such fixings is likely to influence the behaviour, e.g. the use of power tools against hand tools, normal site techniques should be used during the construction of the specimen. Where operations are performed that are covered by recommendations given in codes of practice, these should be used in the construction of the specimen.

When a specimen is built under laboratory conditions, access is often easier than it is during the construction of a building. This is particularly true in the fitting of protective claddings or linings to the fixed structure of a building. During the construction of the specimen it may be possible to carry out certain fixing operations from the opposite side to that normally available on site. Advantage should not be taken of this abnormal situation and all operations should be carried out as they would be in practice.

A.3.3 Materials used in the construction of the specimen

The quality of the materials used in the construction of a test specimen is obviously very important with respect to the fire resistance as determined by these methods. It is important therefore to know how the materials used in the construction of the test specimen relate to those used on site. Whilst it is important that the material is representative of that used on site, it is of greater importance to know how the material relates to the materials likely to be used in practice. The main properties of the materials should therefore be determined and the method used should be stated. The values should then be compared with those known for the materials in use and the relationship should be reported, i.e. whether the material properties represent the average values or the worst case situation, etc.

The critical properties will depend upon the nature of the element being evaluated. For a simple loadbearing element the strength of the materials is obviously of primary importance whilst for a non-loadbearing separating element the density and the thermal conductivity of the materials may be more significant. With composite constructions or fire protected elements a full understanding of both of these basic properties is necessary.

For a full analysis of the strength of a specimen only a complete proof loading procedure will provide exact figures. This will often not be practicable and the strength will need to be determined by analysis of samples. When samples are used, the report should state the relationship between the specimen and the sampled material.

When the properties of a material have not been determined or when nominal properties (taken from appropriate codes or standards) are used, this should be clearly stated in the test report.

A.3.4 Number of specimens

When performing a fire resistance test it is often possible to include more than one specimen in the furnace opening. This is particularly true in the case of fire resisting doors where the basic construction of a single-acting doorset is asymmetric. It is possible to evaluate two units simultaneously, one door opening towards the fire and one door opening out, thus satisfying the need to evaluate the construction with respect to fire exposure on either side by the performance of a single test.

A.3.5 Size of specimen

The need to determine fire resistance with full sized specimens is dictated by the difficulties in reproducing in detail a functionally correct fire behaviour, in model scale, of a loadbearing or separating element of building construction. For ordinary reinforced or prestressed concrete structures, the determination of fire resistance by model scale tests is complicated by the considerable influence of, for instance, the interior thermal stresses, the short term shrinkage and internal creep from heating and the disintegration of the material at certain temperature conditions. For timber structures the problem of determining the fire resistance by a model scale test is just as difficult due to the effects that growth rings, knots and other non-homogeneous features have on the overall behaviour of the material.

The protection of steel structures is equally difficult to model although in the case of unprotected steel work the use of model scale tests for a fire resistance investigation is comparatively favourable. The use of anything other than full sized elements and components is, however, not recommended. The sizes given for the various elements in this method are based upon the limitations imposed by the facilities currently available. There is evidence to show that the minimum dimensions specified for beams and floors which span in two directions (as given in **4.5**) are inadequate to provide a proper analysis of such elements. For biaxial floors it is desirable, and it may eventually become essential, to introduce a minimum dimension of 4 m x 4 m although this cannot be advanced until the facilities are available for testing the larger specimens. Similarly, most beams are used at sizes greater than those that can be tested and whilst advice is given in the appropriate section of this method as to how to design a specimen which is smaller than the element, this is not a substitute for testing at full size.

When elements are smaller than the minimum dimensions given in **4.5**, the specimen should be mounted in a test construction which should be constructed such that it has a fire resistance at least as great as that anticipated from the specimen and should have thermally similar behaviour in terms of strength, restraint, conductivity or thermal inertia, if relevant, as the construction in which the element would normally be built.

A.3.6 Conditioning

The condition of the specimen should, at the time of the evaluation, be similar with respect to its state of strength

and its moisture content as the element would be in normal service. When it is known that the element is going to be exposed to extreme conditions of temperature or humidity, it is unlikely that the testing authority will have the facilities to reproduce these conditions.

In such cases the specimen should be tested in a condition that is as close to those expected within the constraints imposed by the laboratory and the type of element. It is more feasible for example, to condition small joinery items under non-standard conditions than it is to condition a concrete floor slab where the local environment cannot be as closely controlled.

The moisture content of any hygroscopic materials used in a construction has an influence when the specimen is exposed to fire conditions. High moisture contents can lead to the development of steam pockets which may cause delamination of board materials and spalling of concrete as well as producing unnaturally high moisture gradients, and hence distortions, in materials such as timber. Similarly, specimens with unrepresentatively low moisture contents can be affected by abnormal heat flow effects and in the case of jointed constructions there would be smaller shrinkage gaps than would be expected at higher moisture contents.

Under normal use conditions it would be anticipated that the moisture contents by mass of the common materials would be as follows and it is recommended that these moisture levels should exist in specimens being evaluated for internal use.

Timber: all internal joinery applications	9 % to 12 %
structural loadbearing and non-loadbearing timber where the timber will be exposed or partially exposed to a heated or unheated internal environment	9 % to 12 %
all other applications, including structural loadbearing and non-loadbearing timber where the timber will be insulated from the ambient internal conditions of the building	16 ± 2 %

Whilst these recommendations apply to the materials in the construction of the test specimen, the condition of the materials used in the construction of any associated construction or furnace closure may also influence the fire behaviour and hence some control should be exercised with respect to these components.

A.4 Selection of specimen support and loading conditions

A.4.1 Support conditions for the specimen

The edge or end conditions require careful consideration during the design of the test specimen in that the restriction to freedom and/or fixity conditions may be significant to the overall performance of the specimen during the test.

A loadbearing specimen will have a fixity condition at the ends or edges which take the loading or load reaction and will have a variety of restraints at the ends or edges that do not resolve the loading. The ends or edges of a non-loadbearing specimen will only be considered with respect to the restraint to movement that should apply.

For example, the ends of a simply supported beam will have some restraint at the support position in resisting movement in the direction of the applied load, but may be free from restraint against elongation, lateral movement and rotation about the support; the beam should have freedom of movement along its long edges to enable bending to take place in the direction of load. A non-loadbearing partition may be fixed at its head and base restricting any increases in the height of the assembly and perhaps restricting rotation of the fixing in a direction normal to the face of the partition; the vertical edges may be similarly restricted or may have complete freedom.

With specimens that represent the element of construction at full size, the fixity conditions in practice can perhaps be achieved by utilizing the same fixing methods as employed on site. However, with specimens that are smaller than the element in practice, the end or edge conditions will be artificial in relation to the specimen size. It is important that when fixity or restrictions to freedom are introduced into a test specimen, the degree of fixity can be quantified or measured.

Where the fixity conditions in practice cannot be precisely determined or when the practical situation cannot be simulated in a single test specimen, it may be necessary to conduct more than one test in order to appreciate the behaviour of the element in practice, the fixity conditions being varied between the tests to determine their significance on the elements behaviour.

The forces required to produce a situation of full restriction to movement, i.e. no allowance for any increase in dimension or change in position, will depend upon the thermally induced forces developed by the specimen during the test. Where such conditions are warranted, substantial specimen support frames will need to be available with the ability to overcome these forces without significant deflection.

When providing conditions of unrestricted movement, sufficient clearance for movement or expansion should be allowed to ensure that restraining forces are not introduced during the course of the test.

A.4.2 Loading

When selecting the appropriate test loading for a specimen, the following alternative methods of determining the load should be considered.

(a) Where the loading on the element is known, the specimen should carry a test loading that will generate stresses of the same nature and order of magnitude as would be produced at normal temperatures when the element is carrying the design load.

(b) Where the loading on the element is not known, the specimen should be subjected to a test loading that will generate stresses related to the material properties in conjunction with appropriate factors of safety.

It may be necessary to adjust the method of loading in order to obtain maximum stresses of the same nature as those to be encountered by the element, e.g. if the design of the element is governed by the maximum bending stress, it is not valid to test the element with a loading that is governed by maximum shear stress conditions. In certain cases the test loading may be governed by limiting deflection considerations that apply to the element. If this is so, this should be clearly stated in the test report.

Licensed copy:Gravesham Borough Council, 16/03/2006, Uncontrolled Copy, © BSI

(c) The test loading may be a load which has been requested by the sponsor. This should be clearly stated in the test report.

In calculating the test loading it is recommended that actual dimensions, as measured on the specimen or its component parts, should be used in determining the cross-sectional areas and associated section modulii. Similarly, it is recommended that the maximum stresses be determined from the materials used in the construction of the specimen (see **A.7**) rather than by reference to published nominal values for the material. The use of nominal sizes and nominal stresses may lead to subsequent limitations with respect to the applicability of the result obtained.

A.5 Furnace design

A.5.1 Variations in furnace design can account for a lack of reproducibility of fire resistance ratings between laboratories. This standard has introduced a control over the depth of the furnace chamber (based on current practice) and the fuels to be used in order to avoid propagating differences between furnaces if any new furnaces are constructed. The radiated heat reaching the specimen is primarily received from the surface of the furnace chamber opposite the surface of the specimen. The nature of this radiation is determined by the emissivity, the thermal conductivity and the specific heat of the materials used in the construction of this surface. The radiation reaching the specimen from this surface is inversely proportional to the square of the distance travelled and is further modified by flames and particulate matter in the combustion chamber. Whilst at this time it is not possible to impose new constraints on the materials used in the construction of the existing furnaces, the restrictions on the depth of the chamber and the type of fuel used, and hence the combustion environment, which are within the specification of the existing furnaces will stop the building of furnaces that may reduce the reproducibility of the current test. Nevertheless, it is recommended that furnace linings, for a thickness of at least 50 mm, consist of low thermal inertia materials so that kpc (where k is thermal conductivity, p is density and c is the specific heat) at 500 °C is not greater than $500\ W \cdot s^{0.5}/(m^2 \cdot K)$.

Experience gained on oil fired furnaces, mainly in Europe, has shown that the higher levels of radiation emitted from the burner flames have a significant effect on the fire resistance ratings obtained on radiation sensitive materials. For this reason, this standard has limited the fuel to the gaseous fuels, such as natural gas or liquid petroleum gases.

A.5.2 The nature of the flame produced by a burner will depend on the richness of the mixture of fuel and oxygen at the burner. Where a mixture of fuel and air is fed to the burner, the flame produced is likely to be less dependent on the oxygen content of the gases inside the furnace than where the burner is fed with fuel only, but extreme changes in oxygen content can still have significant effects. The oxygen content of the furnace gases has been found to vary with the following:

(a) the combustibility of the test specimen;

(b) the level in vertical furnaces at which the oxygen content is measured;

(c) the general level of pressure inside the furnace;

(d) the amount of air entering the furnace by;

(1) pumping in secondary air;

(2) suction through openings in areas of negative pressure.

A.5.3 While it may seem desirable in the interests of better control of furnace operating conditions to require that the oxygen content of the furnace gases be controlled within stated limits, this revision of the standard has not introduced such requirements because greater importance is attached to the control of temperature and pressure, and no practical means of independently controlling the oxygen content within narrow limits for all furnaces can yet be proposed.

A.5.4 The static pressure difference between the inside and the outside of a vertical furnace operating under steady conditions has been found to vary linearly with height at a gradient of about 8.5 Pa (0.85 mm water-gauge) per 1 m of height, the upper part being at the higher relative pressure. The gradient does not change significantly with operating conditions but the pressure difference at a given height can vary by 20 Pa to 30 Pa (2 mm to 3 mm water-gauge). The pressure inside the furnace at a given level can be increased by:

(a) restricting the area of the flue, e.g. by closing a damper;

(b) reducing the temperature of the gases in the flue, e.g. by diluting them with cold air;

(c) decreasing the amount of ventilation at the bottom of the furnace;

(d) pumping 'secondary' air into the furnace.

Varying the relative amounts of fuel burnt at different levels can also affect the pressure difference at a given level, but the pressure gradient is not affected to any significant extent.

A.6 Instrumentation and ancillary equipment

A.6.1 Ambient temperature measurements

Some guidance on the equipment to be used is given in **A.2.5.2**.

A.6.2 Thermocouples

A.6.2.1 Bare-wire thermocouple measuring junctions are vulnerable to damage and deterioration. Before every test, they should be cleaned, inspected for adequate separation of the wires and checked for proper operation. Because of the deterioration it is recommended that the thermocouples be discarded or recalibrated after being subject to heating in the furnace for a period of not greater than 6 h.

Licensed copy:Gravesham Borough Council, 16/03/2006, Uncontrolled Copy, © BSI

Licensed copy:Gravesham Borough Council, 16/03/2006, Uncontrolled Copy, © BSI

A.6.2.2 Sheathed thermocouple measuring junctions are subjected to much less risk of deterioration but should be cleaned and checked for proper operation before each evaluation. It is recommended that such thermocouples should be recalibrated after an exposure period of between 20 h and 25 h or as may be deemed necessary by the supplier.

A.6.2.3 Support to the furnace thermocouples should not penetrate or be attached to the specimen unless the specific requirements for the position of the measuring junction cannot otherwise be ensured. If the support for the measuring junction has penetrated or been attached to the specimen, it should be arranged so as to have minimal effect on the behaviour of the specimen in relation to the relevant failure criteria or the supplementary information being determined.

A.6.2.4 When measuring temperature by means of thermocouples, significant errors can occur if care is not taken to limit differences in temperature between the individual connections positioned between the thermocouple leads and compensating leads via sleeve connectors, all of different materials. It is therefore important to ensure that either all electrical conductors in each lead from the junction to the recording instrument are of nominally the same material, or there is no significant difference in the temperatures of any of the connections between conductors in both leads to the recorder. The risk of error is probably less for the measurement of furnace temperature than for the measurement of specimen temperatures where connections between thermocouple junction leads and compensating leads may rise in temperature to different extents because of their proximity to a heated specimen. Nevertheless, simple precautions, such as providing thermally insulating sleeves over all electrical connections on all thermocouple leads, should be adopted as good practice.

A.6.2.5 Where information is required about the temperatures reached by individual components or parts of a specimen within its construction, thermocouples should be chosen of the appropriate type and design to suit the type of measurement to be made, e.g. air temperature, material temperature or surface temperature. The thermocouple wires should be suitably insulated to ensure that the wires to the hot junction are not short-circuited by any aspect of the specimen construction or by the conditions experienced during the heating conditions of the test.

The wires from the junctions should be taken along an isotherm for a distance of at least 50 mm and then to the outside of the specimen in such a way that they do not experience temperatures higher than the hot junction. There should be no joint or junction made in the wires until they emerge from the specimen.

A.6.3 Pressure head

A.6.3.1 Because of the turbulence of the gases inside a furnace, a sensitive pressure measuring system could record rapid fluctuations in pressure (with cycles of 1 s or less) often well in excess of the specified tolerance for variation in pressure. These variations would tend to mask the longer-term trends in pressure change which are of greater importance to the test, and thus need to be damped by restricting the tube connecting the sensing head to the micro-manometer or by electrical damping within the measuring or recording circuits.

A.6.3.2 The equipment specified for measuring pressure difference is very sensitive to Pitot effect, i.e. an increase in recorded pressure resulting from air travelling towards the open end of a tube connected to the pressure-sensing side of the measuring device and the reverse effect on the static side. Whilst the effect can be reduced considerably by having a short length of tube forming a T junction at the end of the tube connected to the micro-manometer, the pressure recorded is still dependent on the direction of the air flow in relation to a T-piece sensing head. The recommended sensing head effectively reduces the velocity of air at the entrance to the tube irrespective of the direction of travel of the turbulent gases in the furnace.

A.6.3.3 The pressure difference recorded by the micro-manometer is dependent on the pressure developed at the static side of the instrument as well as the pressure-sensing side; the point in the system at which the static side is exposed to the laboratory atmosphere should therefore also be protected against draughts. The use of the pressure head detailed in figure 8 is recommended for both the sensing head and the static side of the instrument.

A.6.3.4 The accuracy of the measured pressure difference will be seriously affected by any condensed water that blocks the tube between the sensing head and the micro-manometer (particularly in vertical sections). It is therefore recommended that a trap to remove condensed water should be fitted in the tube close to the exit from the furnace. The accuracy can also be affected by significant lengths of vertical tube containing gases at temperatures other than ambient. It is important, therefore, that the tube should not travel vertically until the gases inside will be at a temperature close to ambient.

If the tube connected to a pressure-sensing head inside the positive pressure zone of an operating furnace is open to the laboratory atmosphere at a point near to the micro-manometer, even for a brief time, the tube may well become partly filled with hot gases, which have a lower density than if they were at ambient temperature, and as a result, a lower pressure will be measured. The measured pressure will remain low until the gases have cooled again to ambient temperature.

A.6.4 Balance and oven

A.6.4.1 The balance should be of sufficient capacity to weigh samples of materials selected for monitoring the drying of the specimen, determination of moisture content and density and for weighing the cotton pad. It should have a resolution equivalent to 0.1 % of the total mass of the item being weighed or 0.1 g whichever is the greater. One or more balances may be provided as convenient to satisfy the requirements over the anticipated range of measurement.

A.6.4.2 The oven should be ventilated, capable of accommodating the samples of materials selected for monitoring the drying of the specimen and for determination of moisture content and accommodating the cotton pad for drying. It should be controllable within the range of ± 5 °C. One or more ovens may be provided for convenience.

A.7 Pre-test analysis of the test construction

A.7.1 Size of specimen and individual components

A.7.1.1 The number of readings that are taken when determining the dimensions of the specimen, or its component parts, is dependent upon the known variability of the materials. The accuracy at which the measurements are made depends upon how critical the component is in the overall fire performance. In certain cases the dimensions will not be of any consequence, e.g. the length of the lever handle on a fire resisting doorset, whereas in the case of an applied fire protective coating the thickness will probably be the most important feature of the construction.

A.7.1.2 The use of measured values rather than nominal sizes cannot be overemphasized. This is of greater importance in the case of loadbearing elements as the test loading should be calculated on the basis of the actual dimensions. For both loadbearing and non-loadbearing elements, a complete knowledge of the specimen or component sizes can be of assistance in making any subsequent assessments of the performance should they be required.

A.7.2 Density of materials

A.7.2.1 The density of the materials used in the test construction can significantly affect the thermal behaviour. Both the thermal conductivity and the thermal inertia normally increase as a function of increase in density. Both of these properties play an important role in the fire behaviour of the specimen.

A.7.2.2 The density of a material is normally obtained by weighing samples of known volume. The moisture content of hygroscopic materials will affect such readings and it is therefore important to determine the moisture content and record the density at that moisture content. For relatively homogeneous materials it is normally sufficient to take offcuts of the materials used in the construction for sampling purposes but for less homogeneous materials care has to be taken in the selection of these offcuts to ensure that they are fully representative. For constructions that are cast, e.g. concrete, special samples will need to be produced. Samples should be taken at various stages during the casting process in order to obtain an average density.

A.7.2.3 Similarly, applied coatings require special samples to be produced. A sample should be prepared by coating a smaller section of similar base material, which has previously been weighed, in the same manner and plane as that used during the construction of the specimen and at the same time as the coating is being applied to the specimen.

A.7.2.4 In the case of a construction that is received by the laboratory in a finished condition it may not be possible to take a sample without damaging it. This is particularly true of fully encapsulated materials that are consumed during the test. When no reliable samples of such materials are available, it should be recorded that the densities were not determined.

When a material complies with a British Standard or an international standard that adequately specifies the density, this can be quoted in lieu of taking measurements.

A.7.3 Moisture content

A.7.3.1 Direct reading moisture meters are a convenient method of determining the moisture content of finished specimens. The use of such meters is, however, subject to limitations in use. When meters are used for determining the moisture content of reinforced concrete, the steel reinforcement can easily cause errors in measurement due to the conductivity of the steel.

A.7.3.2 Similarly, composite timber materials such as plywood and glue laminated constructions will cause errors due to the conductivity of the glue lines. Whilst moisture meters are available for several materials they may not always determine the moisture content with sufficient accuracy. The use of meters should therefore be limited to those that have demonstrated a satisfactory correlation with oven drying techniques and even the use of these should be limited to homogeneous materials without composite construction. Where moisture meters are thought to be unsuitable, use should be made of oven drying techniques.

A.7.3.3 When using oven drying techniques the mean moisture content should be determined. In thick samples this will involve the removal of a core sample which extends from the surface to a point at mid-thickness. This sample should be weighed, and then dried in an oven operating at a temperature of 105 ± 5 °C (except for gypsum based products which should be dried at a temperature of 50 ± 5 °C) until an equilibrium mass is reached. From the difference between two masses the moisture content can be calculated.

A.8 Setting-up procedure

A.8.1 Unexposed face temperature measurement

A.8.1.1 In order to evaluate a test construction with respect to compliance with the maximum unexposed face temperature, fixed thermocouples should be applied to the unexposed face of the construction in the same manner as those that are applied for evaluating compliance with the mean unexposed face temperature. These thermocouples should be attached to any feature that is likely to exhibit a more rapid temperature rise than the rest of the specimen.

When, during a test, other unpredicted areas or features start to exhibit local temperature increases greater than those shown on the remainder of the specimen, the roving thermocouple should be used for determining compliance with the criterion of maximum unexposed face temperature.

Licensed copy:Gravesham Borough Council, 16/03/2006, Uncontrolled Copy, © BSI

A.8.1.2 Where it is necessary to use adhesives to attach the unexposed face thermocouples via the insulating pads, the choice of adhesive is important. For consistency of readings the insulating pad should be in an oven dry condition at the start of a test. When an adhesive is used that requires long curing times, it is not possible to maintain the dryness and the adhesive itself is likely to introduce a certain amount of moisture. The adhesive used therefore should contain as little water as possible and should cure as rapidly as is consistent with the state of curing required. The use of locally applied warm air may help to dry the pad and cure the adhesive.

A.8.1.3 Where thermocouples are to be attached to irregular surfaces, a smooth surface not greater than 100 mm x 100 mm should be made to provide an area adequate for adhesive bonding by smoothing the existing surface with a suitable abrasive paper. The material removed should be the minimum to provide an adequate bonding surface. Where the surface cannot be smoothed, a minimum quantity of fillings should be used to provide a suitable surface. The filling should comprise a proprietary brand of ceramic cement and when the filled surface is dry, it should be smoothed, if necessary, with abrasive paper.

A.8.2 Internal temperature measurement

If the internal temperatures being measured are not likely to exceed 400 °C, copper/constantan measuring junctions may be used; if higher temperatures are expected, chromel/alumel junctions should be used. Such thermocouples are more easily installed during the construction of the test specimen rather than during setting-up.

Appropriate methods should be adopted for fixing the measuring junctions securely to the components or the construction so that the thermal behaviour is not greatly disturbed. For example, a junction can be peened to a heavy metal section by drilling a hole in the section only slightly larger in diameter than the thermocouple junction and deep enough to accommodate the junction below the surface. Insert the junction into the hole and burr over the edge of the hole with a punch to retain the wires in position. For light metal sections, the measuring junction can be made leaving a 'tail' of twisted thermocouple wires beyond the junction, which can be attached to the section under the head of a small bolt or rivet. A similar junction can be attached to small metal components, such as screws or wires, by wrapping the tail around the component. In these applications the first contact between the pair of thermocouple wires has to be close to the surface whose temperature is being measured. The thermal contact can be improved by applying a little solder, which will remain effective even at temperatures above its melting point.

The thermal contact can be made by inserting the junction and the insulated leads into a hole with a suitable material of similar properties. Junctions and their leads may also be cast into materials such as concrete.

Protect the thermocouple wires against the following:

(a) excessive temperature rise;

(b) condensation;

(c) damage during further construction of the specimen;

(d) damage resulting from deformation of the specimen during test.

Take care to ensure that the protection does not significantly affect the behaviour of the specimen during the test, and all holes used for egress of the wires are suitably sealed against the flow of hot gases.

A.9 Test procedure

A.9.1 Integrity failure

The collapse of any part of an element will cause failure of integrity by means of a gross failure with respect to imperviousness and should be evaluated by means of the cotton pad test or the gap criterion. Where the whole of the specimen falls from the frame, leaving no part of the specimen to be evaluated with respect to imperviousness, then this is deemed to be an integrity loss.

A.9.2 Cotton pad test

A cotton pad placed in a stream of hot gases issuing from an opening in a specimen may fail to ignite because of a lack of oxygen in the emitted gases when it would normally do so should sufficient oxygen be present. As the oxygen content of the furnace gases has not been specified (see **A.2.6**), the ability of the cotton pad to ignite may depend on the possibility of air from outside the furnace mixing with the hot gases issuing from within.

The operator should therefore use his/her experience to move the pad within reasonable limits so that the pad is subject to a mixture of hot gases and cold air which would not inhibit the ignition.

A.9.3 Observations

A.9.3.1 When evaluating loadbearing constructions the deformation of the construction is used as a basis for the criterion of loadbearing capacity. In non-loadbearing constructions the deformation can be of almost as much value in subsequent assessment work even though there is no criterion imposed upon the performance of the specimen. A knowledge of the deformation characteristics can assist a system designer to choose associated components. Of particular value are records of the distortion of a fire resisting door within its frame or the maximum distortion observed on a non-loadbearing partition. In the case of the door such a knowledge can be used in assessing changes in the sealing specification and in the latter the measured distortion can assist in the choice of a glazing system of a door assembly that is to be used in conjunction with the partition. The data can also be of assistance in the assessment of oversize door assemblies.

A.9.3.2 The lateral deflection of the centre of a loadbearing wall can sometimes be a useful guide to the onset of structural failure. The extent of deformation of a masonry type of construction, taken in conjunction with observations of cracking, or changes in the rate of deformation may both be of significance. Similarly, even with respect to non-loadbearing specimens, the lateral deflection can be of value to the designer when considering

Licensed copy:Gravesham Borough Council, 16/03/2006, Uncontrolled Copy, © BSI

the overall fire behaviour. This is particularly relevant in the case of fire resisting doorsets as the lateral deflections can often dictate the choice of door furniture or edge sealing system.

A.9.3.3 For vertical separating elements the change in deformation recorded by the two displacement measuring devices at any one time should be checked periodically to ensure that the specimen is being loaded symmetrically. Any excessive difference in readings should be reported as supplementary information relevant to the interpretation of the test results.

A.9.4 Radiation

The recording of the irradiance at a certain distance from the unexposed face of the specimen can be of value when calculating safe storage distances for goods and materials. For example, from the measurement of irradiance at a known distance from a radiator of known shape and size, the irradiances at other distances, or the distances required for any given irradiance, may be calculated. The use of these irradiances is, however, a matter for the specialists as there is little guidance in existing fire codes as to limiting irradiances applicable to the storage of goods. Care should also be taken as to how the values are presented. If a radiometer is placed in front of a solid, non-translucent specimen, the measured irradiance is a function of the temperature and the emissivity of the specimen under test. When the meter is placed in front of a translucent element, the measured irradiance is dependent upon the radiation characteristics of the flame and the emissivity of the furnace walls, the latter of which is modified by the absorption and emissivity characteristics of the translucent membrane. Until the thermal characteristics of all furnaces are standardized, it is unlikely that similar irradiances will be measured for identical specimens in different laboratories. The use of irradiance measurements, taken in conjunction with translucent specimens, should therefore be used with discretion.

A.9.5 Termination of test

A.9.5.1 The heating period for a construction is often governed by the regulatory requirements of the element evaluated. The aims of a test have often been met once the duration of exposure has reached the level required by the regulation governing the elements use. It is permissible, therefore, to terminate the heating, and hence the test, at this stage, even if the element has not failed any of the relevant criteria. There are advantages, however, in extending the period of exposure for experimental use. Subsequent assessment of the performance can be aided by a greater knowledge of the mode of collapse, the ultimate duration of the specimen or even just a study of the thermal behaviour beyond that required. In order to provide further knowledge with respect to the first two parameters, the test would be extended under full load; however, for studying the thermal behaviour it may be necessary to remove or reduce the test loading in order to extend the test duration. The test is terminated for certification purposes at the time at which the load is reduced.

A.9.5.2 If the heating period is terminated at the end of the regulatory period for the element under test, in order to demonstrate its ability to carry the load after a period of at least 16 h, in accordance with appendix B, this will inhibit the finding of additional information.

A.9.5.3 If an element is made from a material that is combustible or otherwise degraded by heat, assessments of the amount of material consumed during the test should be made by measurements of the remaining good material in the specimen after the test.

A.10 Loadbearing vertical elements

It has not been possible to define the point at which specimens of vertical elements are deemed to be incapable of supporting the test loading. However, for the purpose of the test, this end point can be indicated by a rapid change in the rate of deformation tending towards infinity. It is recommended that laboratories monitor the rate of deformation in order to be able to predict the onset of failure to support the test load. Since laboratories are required only to provide for maximum deformations of 120 mm, deformations greater than this will not be able to be accommodated and the test would need to be terminated at this point.

Laboratories should monitor the extent and rate of deformation to assist in the future quantification of the mechanism of failure.

A.11 Expression of results

An example of the method of expressing the results of the test is given below:

loadbearing capacity	123 min
integrity	104 min
insulation	63 min

Appendix B. Evaluation of residual loadbearing capacity

B.1 Additional test procedure

The residual strength of a test construction in a fire resistance test is dependent on a number of factors, for example materials of construction, and fixity and continuity. Because of the simplified end conditions usually adopted in a fire resistance test these may be significantly different from those present in a building. Therefore the residual strength of a test construction may be significantly different from that which would be obtained in practice. Members likely to be used simply supported in a building are those likely to require an evaluation of residual strength. Where a structure can be shown to have adequate redundancy or where the form of construction is known to have sufficient residual loadbearing capacity, the residual strength test would not normally be required.

Licensed copy:Gravesham Borough Council, 16/03/2006, Uncontrolled Copy, © BSI

Licensed copy:Gravesham Borough Council, 16/03/2006, Uncontrolled Copy, © BSI

A test construction may be considered to have adequate residual strength if, following the test procedure described in clause **9**, it is capable of supporting the full test load 16 h after termination of the heating period as defined in **9.5** and extinguishing flaming and cooling the specimen as necessary.

If a test construction collapses during the post-heating period, or if a residual strength test is not carried out, a reduction in the time for compliance with the loadbearing capacity criterion may be considered necessary. The level of reduction may be varied for example depending on the mode of failure but should not be greater than 20 %.

B.2 Supplementary report

Where the residual loadbearing capacity is evaluated (see **B.1**) a supplementary report should be issued. The report should contain all of the information required in clause **12** with the results expressed as recommended in **A.11**. An additional statement should be made, however, advising whether the construction supported or failed to support the test load after 16 h. The report should also contain:

(a) details of the post-heating loading conditions;

(b) as many pertinent details of the cooling behaviour as can be quantified, including the use of any extinguishing agents.

B.3 Guidance notes on additional test procedure

If the heating period is terminated before failure has occurred with respect to loadbearing capacity, in order to evaluate the residual loadbearing capacity, the subsequent treatment of the test construction can have a large influence on the result of the load maintenance performance. The rate of cooling of the furnace will depend upon many features, including:

(a) the cooling effect of continued forced ventilation;

(b) the cooling effect of natural furnace ventilation;

(c) the thermal inertia of the furnace construction;

(d) the use of extinguishing agents;

(e) the volume and duration of application of any such extinguishing agents.

These factors are not controlled under the specified method of test and it is probable that there is insufficient data to define a cooling regime. Without the use of an extinguishing agent, the cooling cycles in the various furnaces available will not be standardized and a lack of reproducibility of results will occur due to the influence of the first three factors.

The use of an extinguishing agent such as water will give a degree of uniformity to the cooling cycle but due to furnace design it is not always possible to extinguish a specimen in situ and maintain the loading conditions. The delay between the termination of the heating and the start of extinguishing will also introduce differences, not only between laboratories but even between elements of different construction within a single laboratory.

As it will be extremely difficult to control the cooling cycle, especially with respect to the thermal inertia of the furnace and its natural ventilation, it is recommended that the test report should contain as many pertinent details of the cooling behaviour as can be quantified.

All constructions that contain combustible components but are of a form of construction that needs to demonstrate adequate residual loadbearing capacity will have to be extinguished at the end of the heating cycle for safety reasons. Where this calls for temporary removal of the load in order to facilitate extinguishing, the load should be reapplied as soon as possible after extinguishing has been completed and the time taken should be added to the load maintenance period.

Appendix C. Operating instructions, specimen preparation and observations

C.1 Control instrumentation

C.1.1 Ambient temperature thermometer

This thermometer shall be a mercury-in-glass thermometer, or a thermocouple with a similar hot-junction detail to that specified for the furnace thermocouples (see **6.4.2.2**) to indicate the ambient temperature within the laboratory both prior to and during the test period (see **3.3**). The bulb of the thermometer or the hot junction of the thermocouple shall be protected from the influence of radiated heat and draughts by suitable screening.

NOTE. A recommended method is described in **A.2.5.2**.

The ambient temperature thermometer shall be capable of indicating temperatures to within 1 °C and be accurate to within ± 0.5 °C.

C.1.2 Furnace thermocouples

The furnace thermocouples shall have measuring junctions that consist of either (a) or (b).

(a) Bare nickel chromium/nickel aluminium wires (see BS 4937 : Part 4), 0.75 mm to 1.50 mm in diameter, welded or crimped together at their ends and supported and insulated from each other in a twin bore porcelain insulator except that the wires for 25 mm approximately from the weld or the crimp shall be exposed and separated from each other by at least 5 mm (see figure 9). Such thermocouples shall be replaced after 6 h exposure or be recalibrated after every 6 h of use.

(b) Nickel chromium/nickel aluminium wire contained within a mineral insulation and in a heat resisting steel sheath of diameter 1.5 mm, the hot junctions being electrically insulated from the sheath. The thermocouple hot junction shall project 25 mm from a porcelain insulator. The assembly shall have a response time on cooling in air of not greater than 30 s.

Each thermocouple hot junction shall be supported so that it is 100 ± 10 mm from the nearest point of the test specimen at the start of the test. Provision shall be made to

Licensed copy:Gravesham Borough Council, 16/03/2006, Uncontrolled Copy, © BSI

maintain the thermocouple hot junction between 50 mm and 150 mm from the face of the specimen during the test should any deflection or distortion of the test specimen take place.

The number of thermocouples shall be as required by particular elements and they shall be arranged symmetrically within the furnace. The furnace temperature shall be deemed to be the average of the temperatures given by these thermocouples.

C.1.3 Pressure sensing probe

The pressure sensing probe shall be capable of measuring the true static pressure head at a given height within the furnace. It shall consist of a heat resistant steel pipe having an internal diameter of between 5 mm and 10 mm which passes from inside the furnace to outside the furnace in a substantially horizontal orientation and such that the level at which it exits from the furnace does not differ by more than 25 mm vertically from the level of the sensing head of the probe in the furnace. The open end of the tube inside the furnace shall be provided with a suitable device to ensure that the measured pressure is not influenced by dynamic head effects (see **A.6.3**).

NOTE. A suitable design of pressure sensing probe is shown in figure 8. Alternative designs may be used, provided that their performance has been verified as being equivalent to the device shown in figure 8.

The pressure sensing probe shall be connected to a pressure indicator (see **C.2.2.3**) via leaktight tubing with a condensation trap that shall preferably be positioned adjacent to the outside of the furnace.

C.1.4 Load measurement

When a test construction is required to be tested under load, and the test loading is applied by hydraulic or mechanical rams, the value of loading shall be determined by either the measurement of the hydraulic pressure in the supply lines to the loading rams, or by the use of load cells taking care to avoid excessive side loads. Where the load is determined by measurement of the hydraulic pressure, frequent checks of the system shall be conducted using load cells to ascertain that each hydraulic ram is producing the required level of load over its operational stroke to an accuracy of ± 2.5 %. Where possible, load cells shall be used on the hydraulic rams during the course of the test to ensure that loading is applied correctly and shall be positioned such that they are not subjected to excessive temperature change so as to affect their accuracy.

C.2 Recording and ancillary equipment

C.2.1 General

This subclause specifies the requirements for recording equipment to be used with various items of the control and monitoring instrumentation as it is considered that careful description of the item is necessary. Also included are details of ancillary equipment that are required for incidental measurements required by the standard.

C.2.2 Indicating and recording equipment

C.2.2.1 *General.* It is recognized that the outputs from the various instruments may be measured on a single multi-channel data logging system rather than supplying separate recording equipment for each type of instrument or groups of instruments. Nevertheless, the requirements given in **C.2.2.2** to **C.2.2.6** are the minimum that shall be satisfied for recording the output of each transducer instrument.

C.2.2.2 *Furnace temperature and specimen internal temperature indicators.* The temperature indicator shall be capable of measuring the output from a furnace and/or specimen thermocouple with an accuracy not less than 1 % of indicated reading or ± 1 °C or the millivolt equivalent, whichever is the greater, over a temperature range of 0 °C to 1250 °C. It shall be capable of assimilating the incoming data and producing a permanent record of the temperature of each thermocouple at intervals of not greater than 60 s. It shall be provided with its own cold junction reference and compensation device.

C.2.2.3 *Furnace pressure indicator.* The furnace pressure shall be measured using a precision inclined manometer or a pressure transducer. It shall be capable of indicating pressure differences of up to 25 Pa, both negative and positive. It shall have a resolution of 0.5 Pa or better. The indicator, together with the pressure sensing probe and interconnecting tubing, shall respond to a change of pressure of 10 Pa and achieve an equilibrium value in less than 10 s.

C.2.2.4 *Fixed surface temperature indicator.* The temperature indicator shall be capable of measuring the output of the specimen surface thermocouples with an accuracy not less than 1 % of the indicated reading or ± 1 °C or the millivolt equivalent, whichever is the greater, over a temperature range of 0 °C to 400 °C. It shall be capable of assimilating the incoming data and producing a permanent record of the temperature of each thermocouple at intervals of not greater than 60 s. It shall be provided with its own cold junction reference and compensation device. 1

C.2.2.5 *Roving surface temperature device.* The display from the instrument shall be visible to the operator during use of the roving thermocouple. It shall be capable of measuring the output from the roving specimen surface thermocouple with an accuracy not less than 1 % of the indicated reading or ± 1 °C or the millivolt equivalent, whichever is the greater, over a temperature range of 0 °C to 400 °C.

C.2.2.6 *Irradiance indicator.* The instrument shall be a millivolt measuring device with a range compatible with the maximum output from the radiometer. It shall have a range sensitivity and accuracy that enables the irradiance measured by the radiometer to be resolved to 0.5 kW/m^2. It should not be provided with any cold junction reference or compensation device.

C.2.3 Ancillary equipment

Timing devices, with an accuracy of 1 s/h and capable of running throughout the test period, suitable weighing equipment and drying ovens (see **A.6.4**) are required.

Licensed copy:Gravesham Borough Council, 16/03/2006, Uncontrolled Copy, © BSI

C.3 Examination of specimen

C.3.1 Make a detailed examination of the test specimen comparing the constructional details against the specification provided by the sponsor. When it is not possible to verify aspects of the sponsors specification, state this in the test report.

C.3.2 Measure dimensions using equipment with an accuracy consistent with the measurement being made. Where appropriate, make these measurements in accordance with the relevant specification (see **A.7.1**).

C.3.3 Where the density of a material (see **A.7.2**), component or applied finish is likely to influence the fire resistance of the specimen, determine the density of that material in accordance with the appropriate British Standard.

Where no relevant British Standard exists, determine the density by weighing samples of known volume taken from materials used in the construction of the specimen. When evaluating factory made specimens that incorporate fully encapsulated materials which cannot be sampled without detriment to the specimen, determine the density on samples supplied by the manufacturer of the test specimen and in the report identify such measurements as having been determined in this way. When no reliably related samples of materials exist, state in the report that the density has not been checked.

When the density has been determined, state the appropriate value and the method by which it was determined in the test report.

For hygroscopic materials relate the density to the moisture content as measured.

C.3.4 As part of the specimen analysis determine the moisture content of all hygroscopic materials when possible (see **A.7.3**).

NOTE. Direct reading moisture meters are available for some materials and these may be used for this purpose providing that a satisfactory correlation with oven drying techniques has been established. When no such correlation exists, or for materials for which no such equipment is available, the moisture content should be measured using oven drying methods on representative samples of material.

Give careful consideration to the positions from which samples are taken in order to ensure that the fire resistance of the specimen is not adversely affected. When this is unavoidable, repair the specimen using material with similar fire properties fixed in such a manner that the fire resistance of the specimen is not impaired. In certain cases, e.g. composite or encapsulated materials, it may not be possible to make such measurements without impairing the behaviour of the specimen and in such cases report that the moisture contents have not been determined.

Report the values obtained for moisture contents and the method used for determining them.

C.4 Preparation of specimen

C.4.1 Fixing the monitoring thermocouples

C.4.1.1 *General.* For the purposes of determining temperatures on the unexposed surface and inside, if appropriate, of the test construction during the heating period, affix thermocouples as specified in clause **6**.

Allow sufficient time for any adhesive that is used for attaching the thermocouples to attain the required state of cure before testing (see **A.8.1**).

C.4.1.2 *Internal temperatures.* Where information is required about the temperatures reached by internal components or parts of a test construction within its construction, fix thermocouple measuring junctions at the required positions within the specimen (see **A.6.2.5** and **A.8.2**).

C.4.1.3 *Temperatures at predetermined positions on the unexposed face*

C.4.1.3.1 *General.* Where a specimen of a separating element is to be evaluated for its insulating properties, fix the surface temperature thermocouple to the unexposed face as described in **C.1.2**, at positions appropriate to the type of element and as specified in BS 476 : Parts 21 to 23 (see **A.8.1**). Ensure that the copper disc is held in intimate contact with the surface of the specimen by fixing or holding the insulating pad to the surrounding surface (see **A.8.1.2**).

C.4.1.3.2 *Flat surfaces.* Mount the measuring junction on flat surfaces so that the whole of the surface of the copper disc is in intimate contact with the unexposed surface of the specimen. Fix the insulating pad to the surface of the specimen either by the use of a heat-resisting adhesive or by some mechanical means fixed through the area outside that covering the copper disc. Ensure that no adhesive gets between the disc and the surface of the specimen and that any mechanical device has an insignificant effect on the transmission of heat through the specimen to the copper disc.

On certain horizontal separating elements, especially those with exposed insulation, this may not be suitable due to the fibrous or resilient nature of the materials in such situations. In these situations use the thermocouple weights shown in figure 10 by placing the lower ends of the four legs symmetrically on top of the pad in such a manner that air is free to circulate over the upper surface.

NOTE. Textured surfaces require special consideration (see **A.8.1.3**).

C.4.1.3.3 *Small features.* When it is required to apply a measuring junction to a small feature, do not apply the junction to a small feature with a diameter less than 12 mm. Where the temperature of small features is to be measured, attach the thermocouple only where the small feature diameter is greater than 12 mm in diameter. If necessary, distort or cut the insulating pad but without affecting the part immediately over the disc. Hold the disc in contact with the feature by the method described in **C.4.1.3.2**.

C.4.1.3.4 *Positions of measuring junctions.* Position the measuring junctions so that they are not over or immediately adjacent to any feature that constitutes a potential failure with respect to integrity rather than insulation, i.e. where the measuring junction may be heated by the passage of hot gases from the furnace through the specimen. Do not fix the junctions where they may be affected by any equipment used for applying the test

loading to a loadbearing specimen. This may require a re-positioning of the thermocouple from its normal position up to a maximum of 200 mm; if this is necessary, report the position and reason for its alteration.

C.5 Installation of specimen

The test specimen prepared in accordance with clause **4** and following measurement of the properties of materials (see clause **7**) and taking account of the thermocouple fixings (see **C.4.1**) shall be mounted together with any support system (see **6.3**) as defined in BS 476 : Parts 21 to 23, in its normal orientation either on top of, in front of, or within the appropriate furnace for the type of element being evaluated.

Care shall be taken to ensure that the test construction, and its support frame if used, is correctly and adequately fixed and is stable.

Loadbearing constructions shall be mounted such that the plane of the specimen is in line with, or normal to any fixed plane of loading, so that the loading plane passes through the central axis of the specimen unless the evaluation is to be performed specifically with eccentric loading. Any gaps shall be sealed between the test construction or its support frame and the furnace opening, taking care not to introduce unintentional restrictions to any degrees of freedom which may have been provided.

C.6 Application of fixity

When a specimen is required to be evaluated with end or edge conditions that require initial fixity, the fixing devices or forces shall be applied prior to the application of the test load.

C.7 Installation of control thermocouples and temperature measuring devices

C.7.1 Timing control thermocouple

Text deleted.

1

C.7.2 Furnace control thermocouples

The furnace temperature control thermocouples shall be positioned as described in **C.1.2** in the positions specified in BS 476 : Part 21, 22 or 23 as appropriate to the element under evaluation.

C.7.3 Ambient temperature measuring devices

C.7.3.1 *General.* Where the thermometer or thermocouple systems used for determining the ambient temperature is not a permanent fixture in the laboratory, these shall be in accordance with **C.7.3.2** and **C.7.3.3**.

C.7.3.2 *Vertical separating elements.* When testing vertical separating elements, the sensing element of the temperature measuring device shall be located at a level approximately that of the mid-height of the test construction and at a position between 0.5 m and 1.5 m outside a vertical edge of the test construction.

C.7.3.3 *Horizontal separating elements.* When testing horizontal separating elements, the sensing head shall be positioned at a level approximately at the top of the test construction and at a position between 0.5 m and 1.5 m outside a horizontal edge of the test construction and at approximately mid-span.

C.8 Installation of other monitoring equipment

C.8.1 Lateral deflection and other linear displacement measuring equipment

If applicable, any apparatus required for measuring deformations (see **6.4.2.5**) shall be attached or positioned in the positions specified in BS 476 : Part 21, 22 or 23 as appropriate to the element under evaluation.

C.8.2 Irradiance measurement.

When it is required to evaluate a specimen with respect to radiation from the unexposed face, the radiometer (see **6.4.2.6**) shall be located at a distance such that its field of view circumscribes the specimen area.

NOTE. If the radiating area is of a more complex shape, the length of the largest dimension of the radiating area should be used.

The distance of the receiving elements of the radiometer to the mean plane of the radiating surface shall be measured to an accuracy of ± 10 mm and this shall be reported.

C.8.3 Interconnection of monitoring equipment

Connect all thermocouple wires and other monitoring instruments to the appropriate recording equipment and check them for proper functioning.

C.9 Furnace heating

The heating of the furnace shall be commenced and when the temperature indicated by one of the furnace control thermocouples (see **6.1.8**) is 40 °C, take this as the nominal start of the test. At this time, the timing device(s) (see clause **6** and **C.2.3**) shall be started and monitoring of all data commenced. The mean furnace temperature shall be controlled, as indicated by the furnace thermocouples (see **6.1.6**) positioned as specified for the type of component being evaluated (see BS 476 : Parts 21 to 23), so that the requirements of **3.1** are met. Five minutes after starting the test, the pressure inside the furnace shall be controlled as specified in **3.2**.

1

C.10 Monitoring of criteria

C.10.1 General

Throughout the heating period, the specimen shall be continually monitored for compliance with the relevant

Licensed copy:Gravesham Borough Council, 16/03/2006, Uncontrolled Copy, © BSI

criteria for loadbearing capacity, integrity and insulation, and all times recorded as elapsed times to the nearest minute, from the start of the heating period, until the occurrence of the event being monitored.

C.10.2 Loadbearing capacity

The vertical deflection in the case of flexural members shall be monitored at the appropriate positions for the loadbearing element (see BS 476 : Part 21).

C.10.3 Integrity

C.10.3.1 The test construction shall be monitored for the appearance of any sustained flaming on the unexposed face.

C.10.3.2 The test construction shall be monitored for impermeability, by noting any gaps, cracks or fissures that are visible on the unexposed face of the specimen. After the first 5 min of the heating period, all gaps, whether they were visible before the heating period or have developed during heating, shall be subjected to periodic evaluation by the cotton pad as specified in **6.4.2.3** to determine whether the cotton pad flames on application or is observed to glow. The pad shall be used by placing the frame in which it is carried against the surface of the specimen, for a period of not less than 10 s and not longer than 15 s, over or near any opening.

Wherever possible, the whole of the base of the frame shall be kept in contact with the unexposed face of the specimen throughout this period.

NOTE 1. Some small positional adjustment may be made, parallel to the surface, in order to obtain the maximum effect from any hot gases. Where irregularities in the surface of the specimen near the opening prevent the whole of the base of the frame from being in contact, place the pad so that as much of the frame as possible is in contact with the specimen (see **A.9.2**).

In the event of the pad failing to ignite or glow, the test shall be repeated using a new pad in the frame at a frequency determined by the condition of the element.

When gaps occur on the unexposed face of vertical separating elements at positions on or below the neutral pressure axis, the gap gauges specified in **6.4.2.4** for evaluating the integrity shall be used.

The size of the gap, hole or fissure shall be measured at intervals determined by the condition of the construction, by using without excessive force the gauges specified. The gauges shall be tried in turn in any hole to determine whether the 25 mm diameter gauge can penetrate the gap to its full length or the 6 mm diameter gauge can be moved in any one opening for a distance of 150 mm.

NOTE 2. The 6 mm gauge should be applied to any hole through which hot gases can pass. The hole should be part of a continuous passage through the specimen.

When using the 6 mm diameter gauge, any small interruption to the passage of the gauge that would cause an insignificant reduction to the transmission of the hot gases through the opening shall be ignored, e.g. small fastenings across a construction joint that has opened up due to distortion.

The time at which the opening exceeds the criteria given in **10.3.2** shall be recorded.

The use of the cotton pad shall be discontinued when the unexposed face of the construction indicates a temperature of 300 °C in the vicinity of the gap being evaluated. This temperature shall be measured by placing the centre of the roving thermocouple, specified in **6.4.2.2**, at a distance of between 30 mm and 70 mm to the side of, or below the gap, or by the nearest unexposed face fixed thermocouple if one is positioned within 30 mm to 70 mm of the gap. 1

After the use of the cotton pad has been discontinued, the integrity of the test construction shall be determined at such gaps by means of the gap gauges used above.

C.10.4 Insulation

The temperature measured by the fixed unexposed face thermocouples as specified in **C.2.2.4** shall be monitored for compliance with the criteria given in **10.4** (see **A.8.1**) for both the mean and the maximum unexposed face temperatures. The unexposed face shall be monitored for compliance with the criterion for maximum unexposed face temperature as defined in **10.4** using the roving thermocouple (see **6.4.2.2**). This roving thermocouple shall be used to determine the temperature of hot spots that develop during a test. Unlike the fixed thermocouples, the roving thermocouple shall be applied to any surface on which it can be placed, whether 12 mm in diameter or not, subject to the limits given in **10.4**.

The temperatures recorded by the roving thermocouple shall not be used in the calculation of the mean unexposed face temperature, unless failure or detachment of one of the specified mean unexposed thermocouples requires data from that position to be supplemented by information from the roving thermocouple.

C.11 Observations

C.11.1 Whilst not being a criterion of failure for non-loadbearing constructions, any significant deflections of the test specimen (see **A.9.3**) shall be monitored and recorded.

C.11.2 The unexposed face of the construction shall be monitored by means of the radiometer specified in **6.4.2.6** (see **A.9.4**). The radiometer shall be supported with the receiver parallel to the unexposed surface of the test construction, on a line perpendicular to the surface at the centre of the area of the part of the construction from which the radiation is to be measured.

NOTE 1. Irradiance from the surface of a test construction is a characteristic of the performance for which no criterion exists. There is, however, a need in the case of separating elements that have poor insulating characteristics to determine the amount of heat being radiated from the whole or part of the specimen being evaluated.

If the radiometer receives radiation from warm or hot surfaces other than that part of the construction from which the radiation is to be measured, a screen of polished aluminium large enough to screen the receiver from the

Licensed copy:Gravesham Borough Council, 16/03/2006, Uncontrolled Copy, © BSI

extraneous radiation and with an aperture geometrically similar to that part of the test construction from which the radiation is to be measured, shall be interposed between the radiometer and the specimen.

The screen shall be positioned in front of the receiver and parallel to the specimen so as to exclude as much extraneous radiation as possible but without obstructing the passage of radiation between the part of the test construction being evaluated and the receiver.

NOTE 2. A distance of 200 mm from the plane of the screen to the receiver would be suitable for the receiver specified in **6.4.2.6.**

Additional screening may be required if the radiometer can receive radiation from other sources by reflection from the screen.

Appendix D. Hydrocarbon curve

While the heating regime described in clause **3** is the fire exposure condition required by this standard and generally employed for building uses it is recognized that it may be inappropriate for certain special risk requirements. Such exposure environments will, more appropriately, be provided for in other standards which cover fire resistance tests of other than building constructions.

An example of one heating regime where the exposure is considered to equate with a large hydrocarbon fire which has recently been proposed in ISO/DIS 834 is as follows:

$$T = 1100\,[1 - 0.325 \exp(-\ 0.1667\,t) - 0.204 \exp(-\ 1.417\ t) - 0.471 \exp(-15.833\ t)]$$

where

T is the temperature increase (in °C);

t is the time at which temperature increase has occurred (in min).

It has to be recognized that, as well as varying the heating regime, detailed attention needs to be given to other test parameters and certain procedural details will also require alterations.

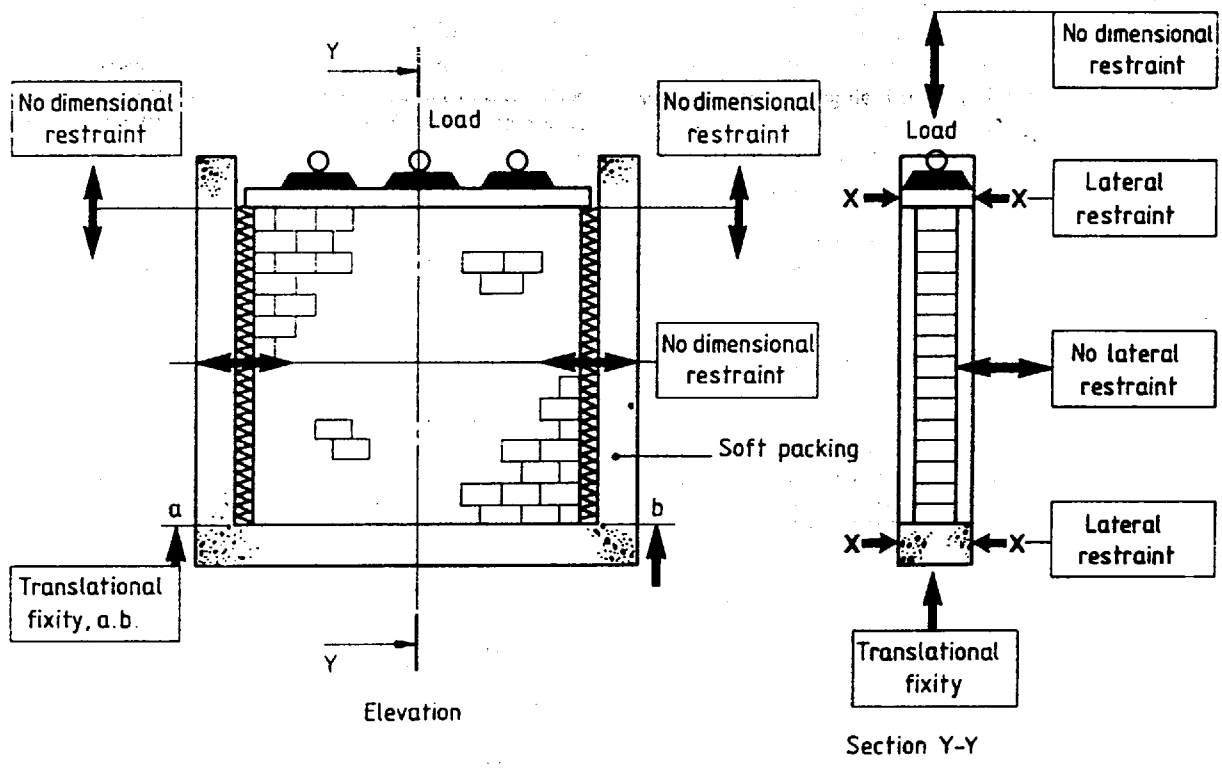

(a) Loadbearing wall

Figure 1. Examples of restraint

Licensed copy:Gravesham Borough Council, 16/03/2006, Uncontrolled Copy, © BSI

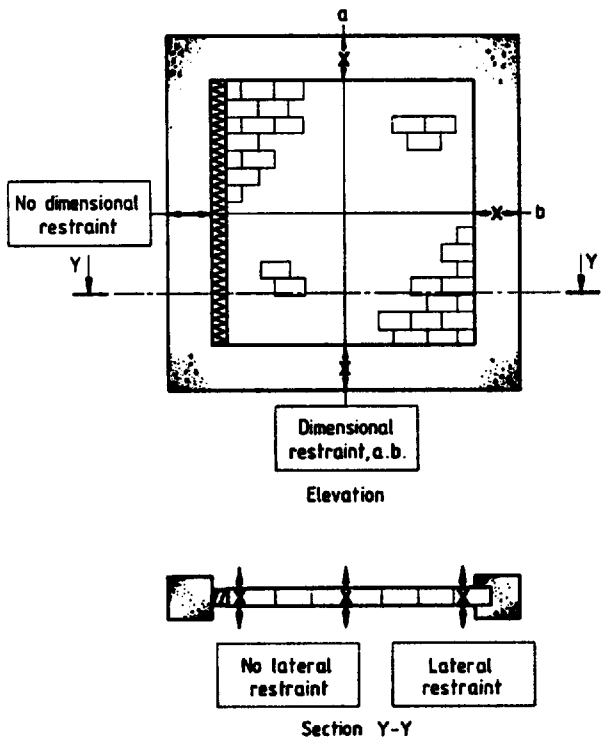

(b) Non-loadbearing wall

Figure 1 *(continued)*

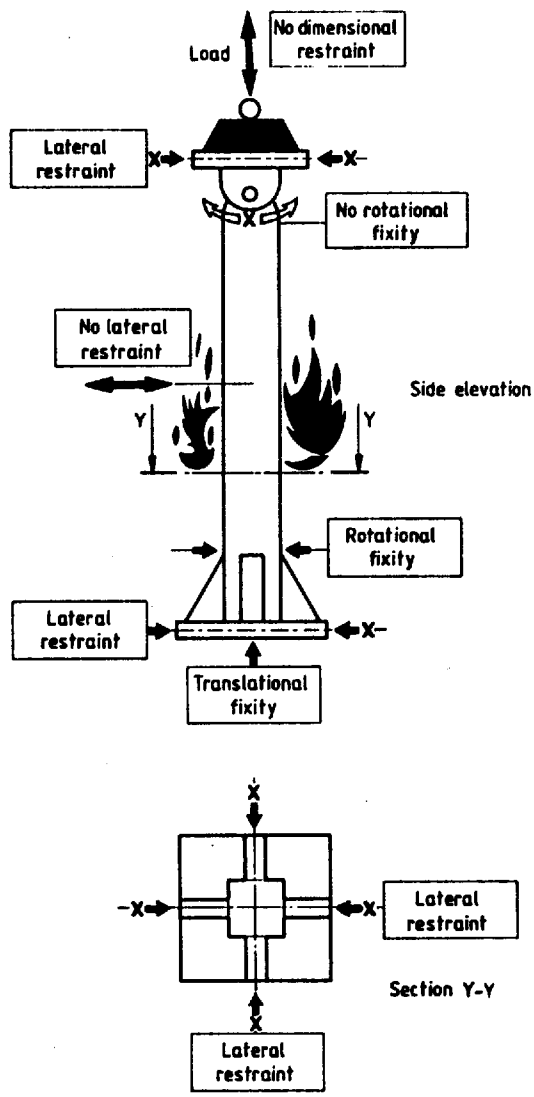

(c) Column pinned one end

Figure 1 *(continued)*

Licensed copy:Gravesham Borough Council, 16/03/2006, Uncontrolled Copy, © BSI

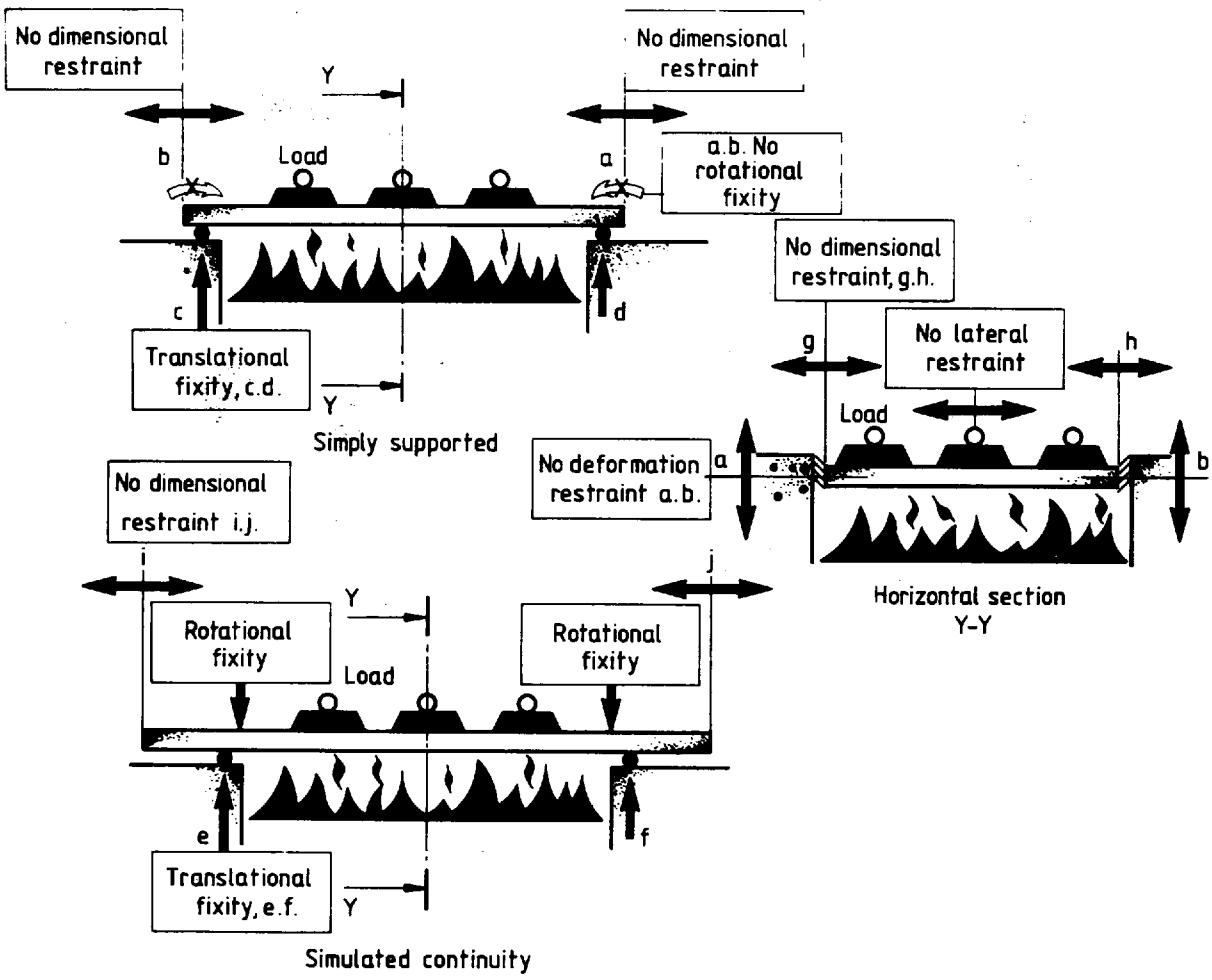

(d) Floors

Figure 1 *(continued)*

Licensed copy:Gravesham Borough Council, 16/03/2006, Uncontrolled Copy, © BSI

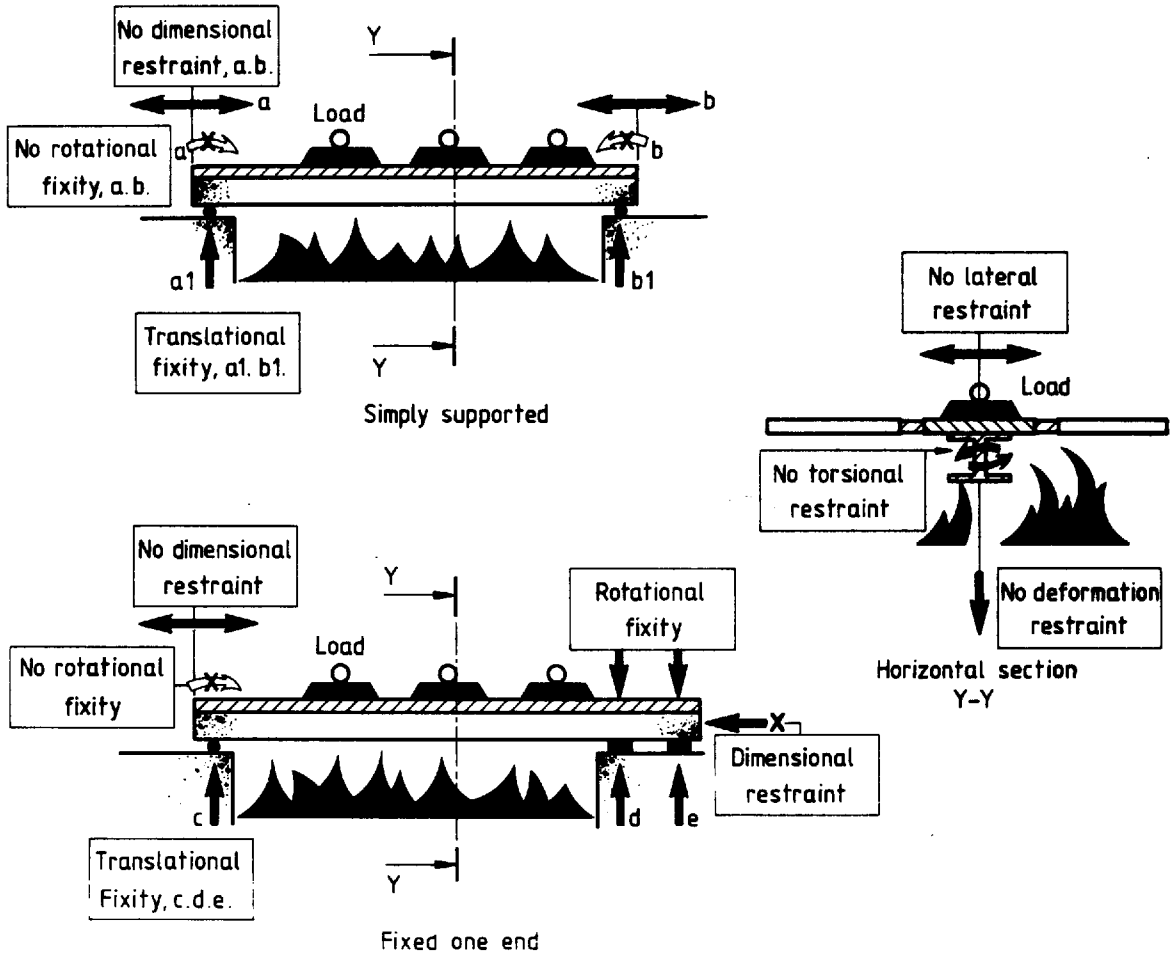

(e) Beams

Figure 1 *(concluded)*

Licensed copy:Gravesham Borough Council, 16/03/2006, Uncontrolled Copy, © BSI

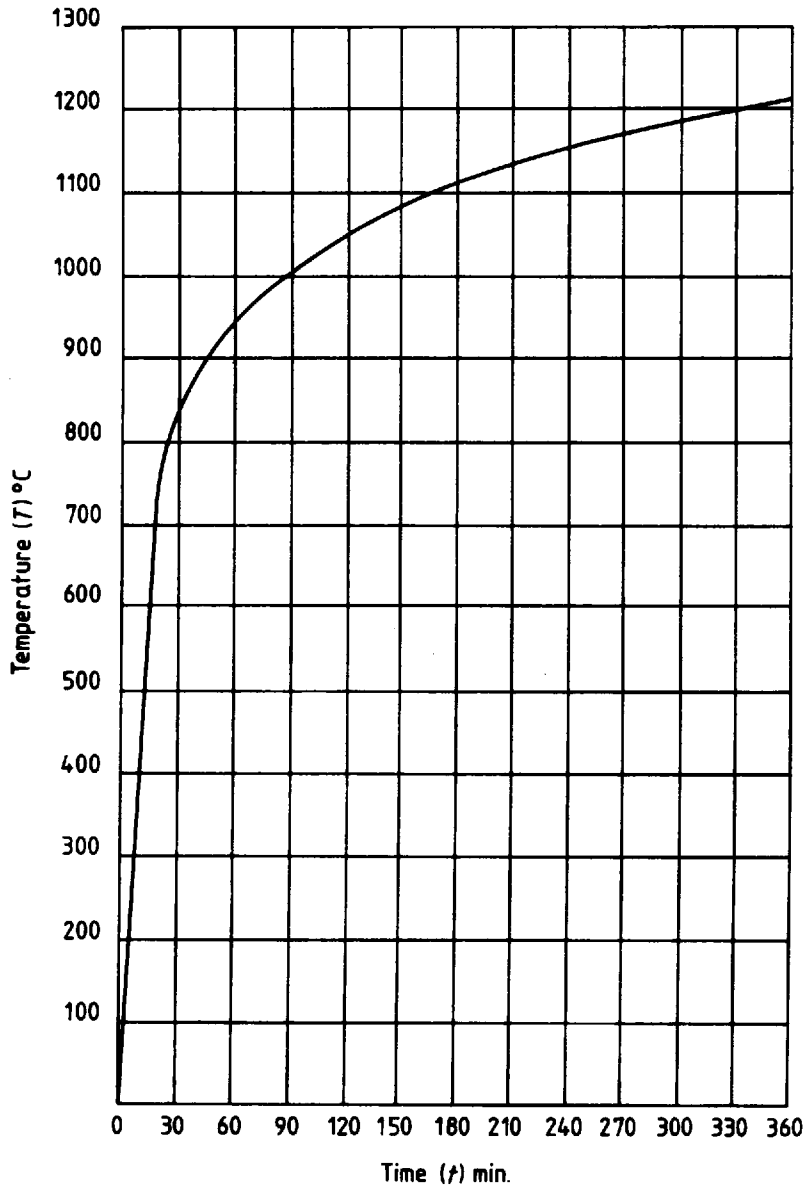

Figure 2. Standard temperature/time curve

Licensed copy:Gravesham Borough Council, 16/03/2006, Uncontrolled Copy, © BSI

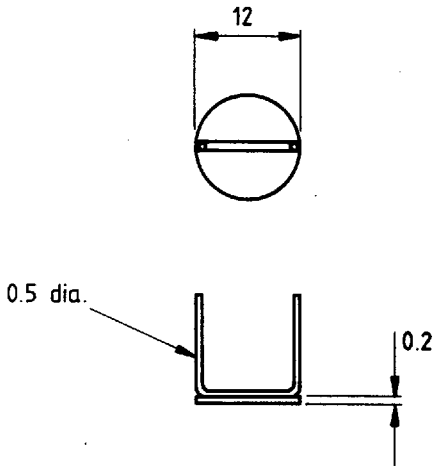

(a) Copper disc measuring junction

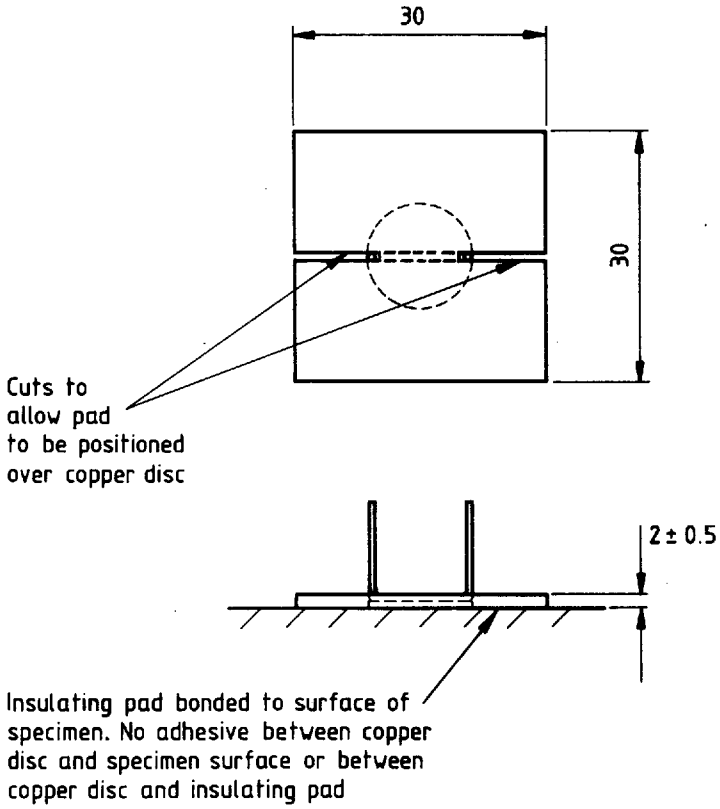

(b) Copper disc and insulating pad

All dimensions are in millimetres.

Figure 3. Specimen surface thermocouple junction and insulating pad

Licensed copy:Gravesham Borough Council, 16/03/2006, Uncontrolled Copy, © BSI

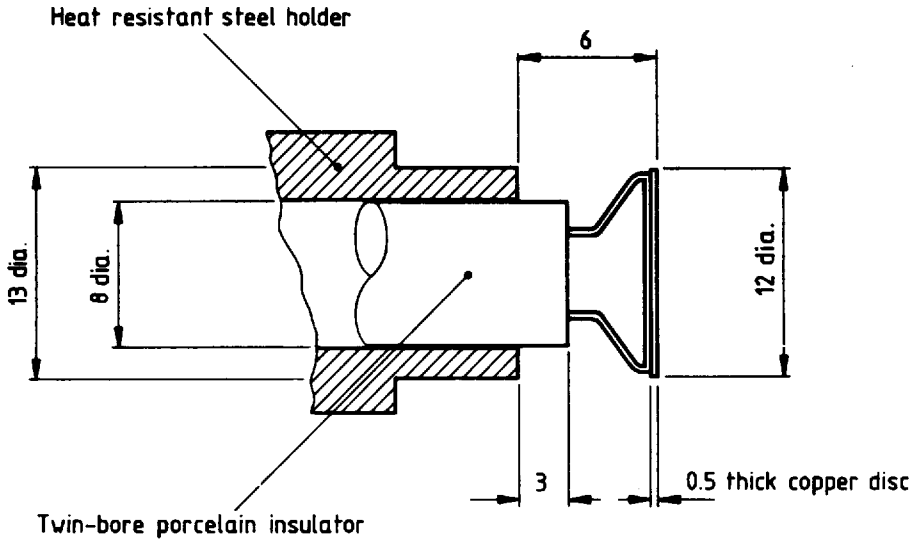

All dimensions are in millimetres.

Figure 4. Roving thermocouple measuring junction

Licensed copy:Gravesham Borough Council, 16/03/2006, Uncontrolled Copy, © BSI

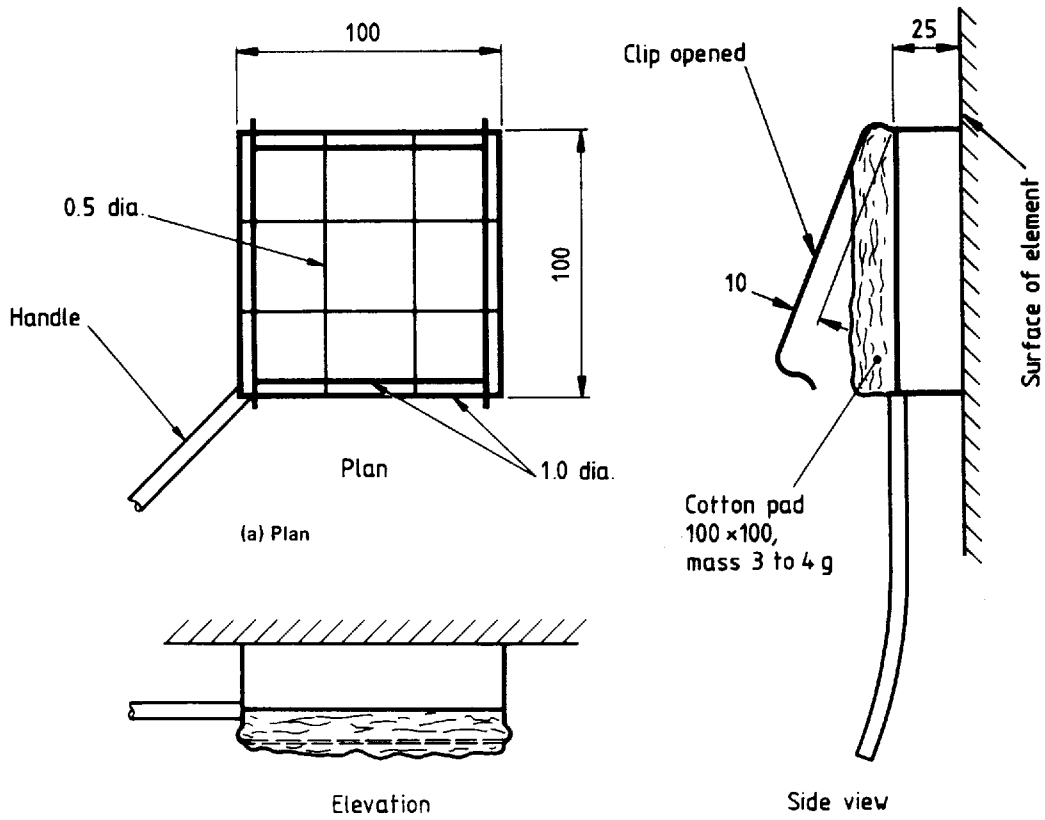

All dimensions are in millimetres.

Figure 5. Typical frame for supporting the cotton pad

Licensed copy:Gravesham Borough Council, 16/03/2006, Uncontrolled Copy, © BSI

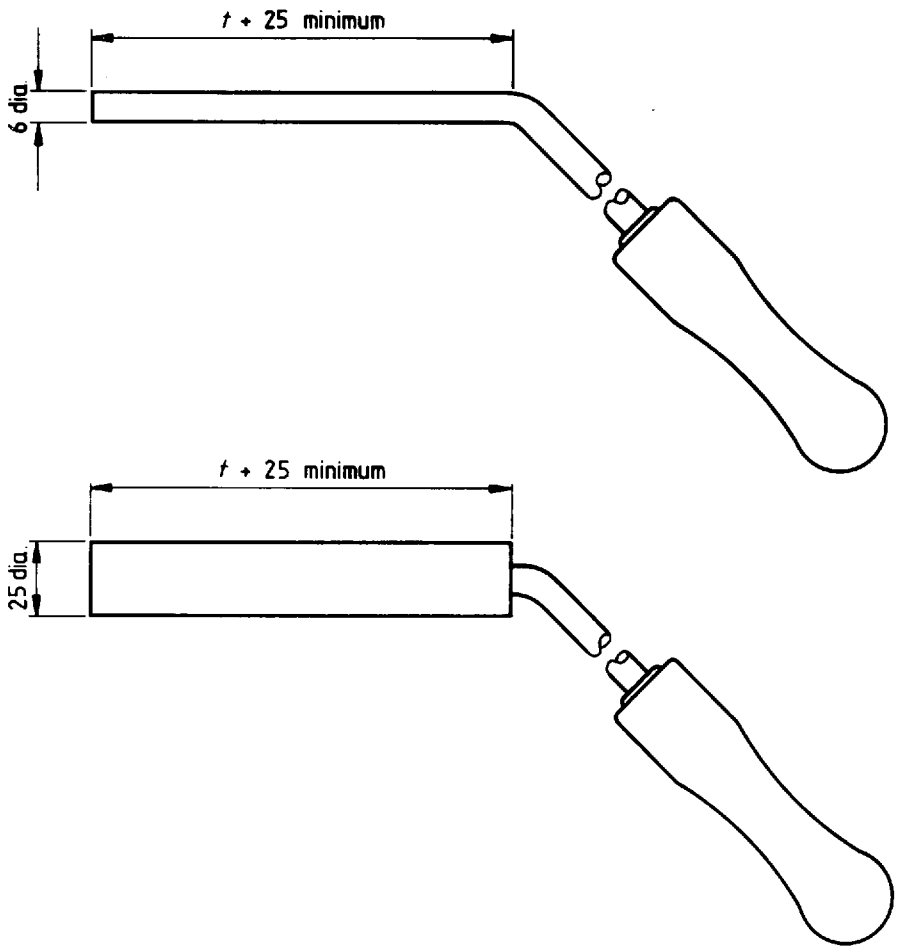

All dimensions are in millimetres.

NOTE. *t* is the thickness of the specimen.

Figure 6. Steel gauges for determining imperviousness

Licensed copy:Gravesham Borough Council, 16/03/2006, Uncontrolled Copy, © BSI

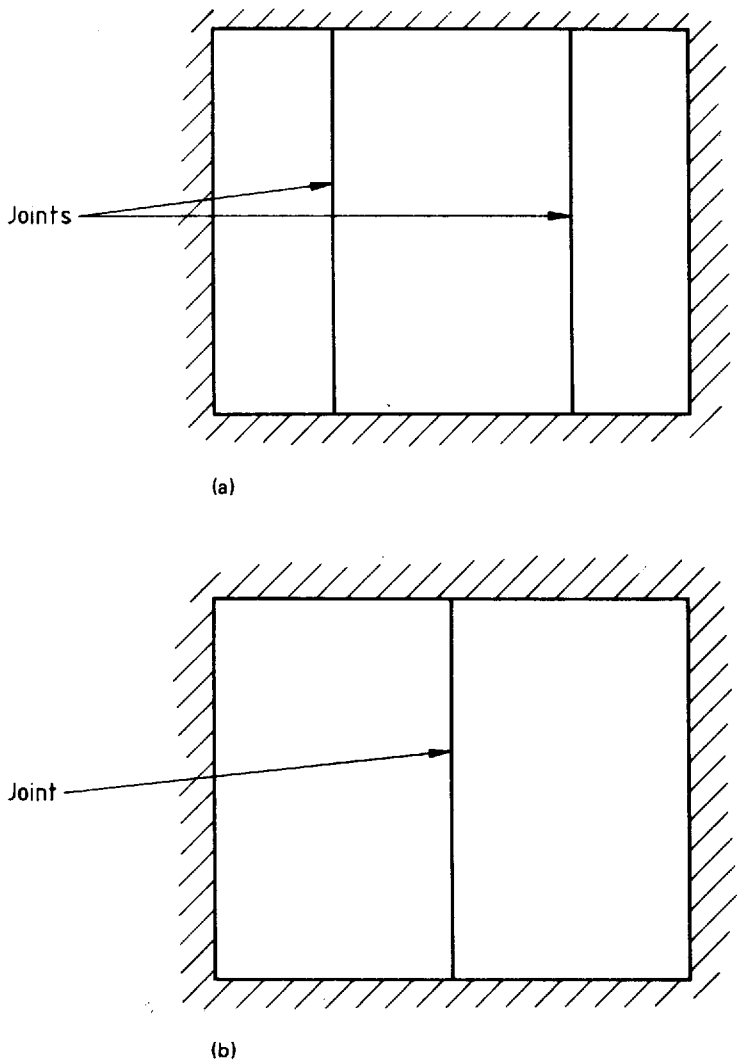

Figure 7. Alternative jointing methods for walls

Licensed copy:Gravesham Borough Council, 16/03/2006, Uncontrolled Copy, © BSI

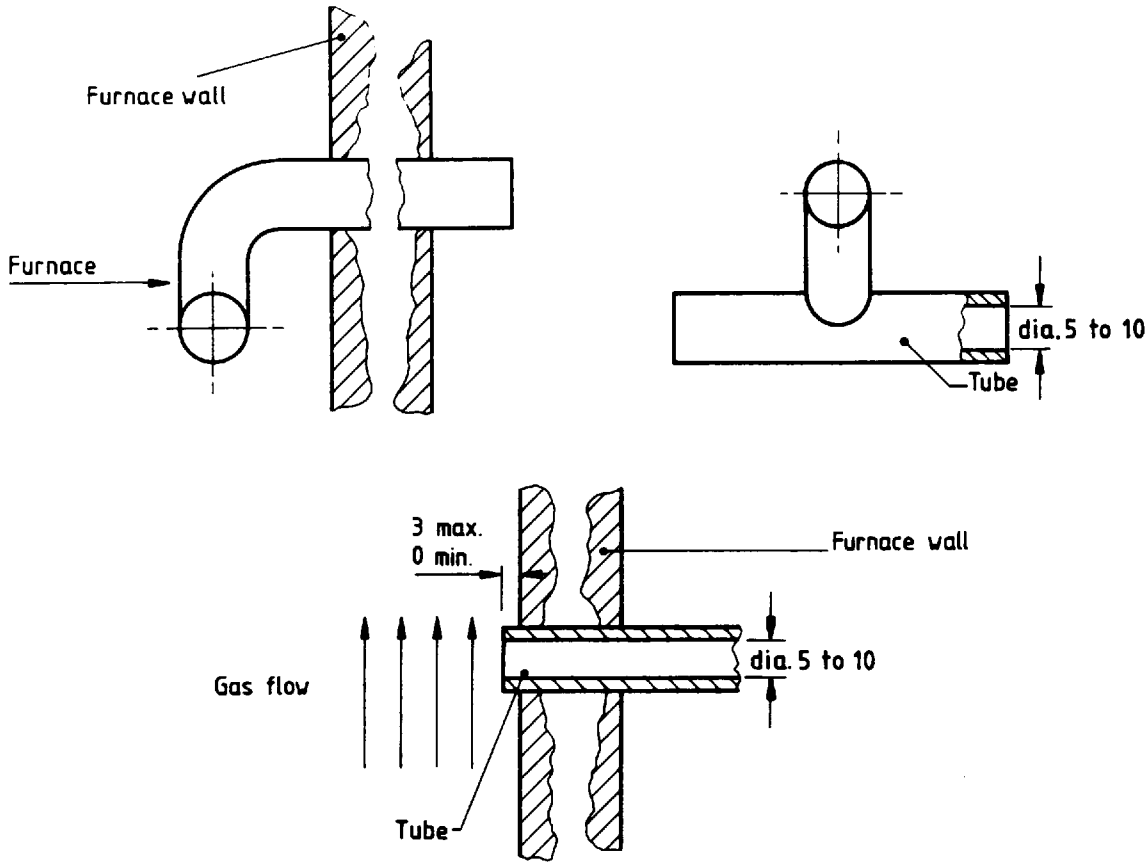

Figure 8. Pressure sensing head

Licensed copy:Gravesham Borough Council, 16/03/2006, Uncontrolled Copy, © BSI

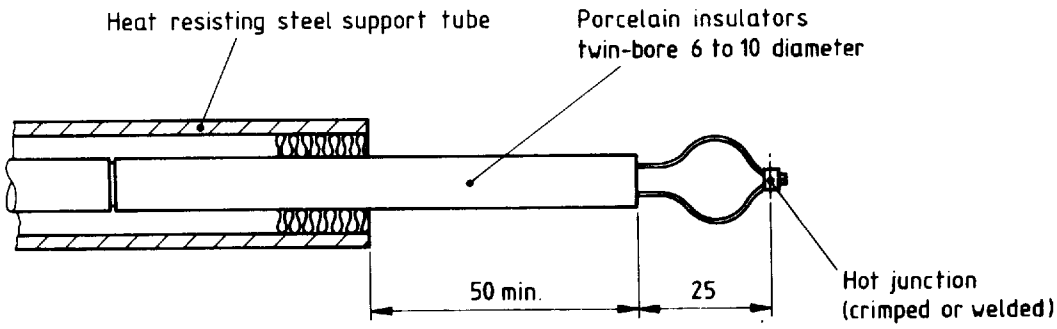

(a) Bare wire thermocouple assembly

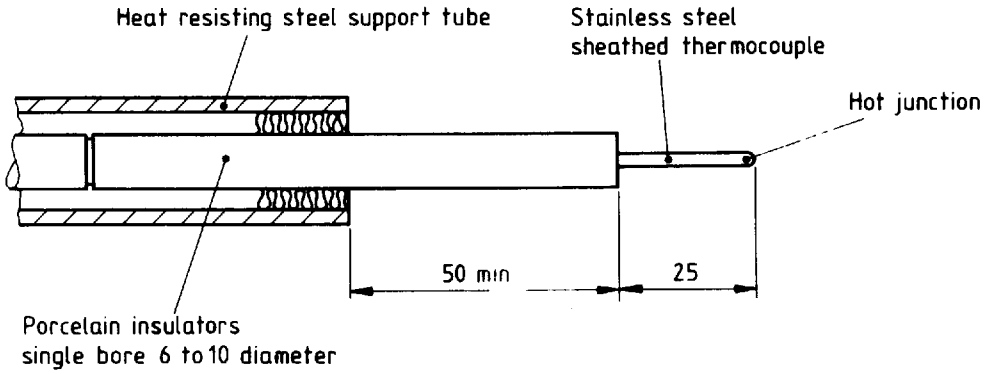

(b) Stainless steel sheathed thermocouple assembly

All dimensions are in millimetres.

Figure 9. Furnace thermocouple assembly

Licensed copy:Gravesham Borough Council, 16/03/2006, Uncontrolled Copy, © BSI

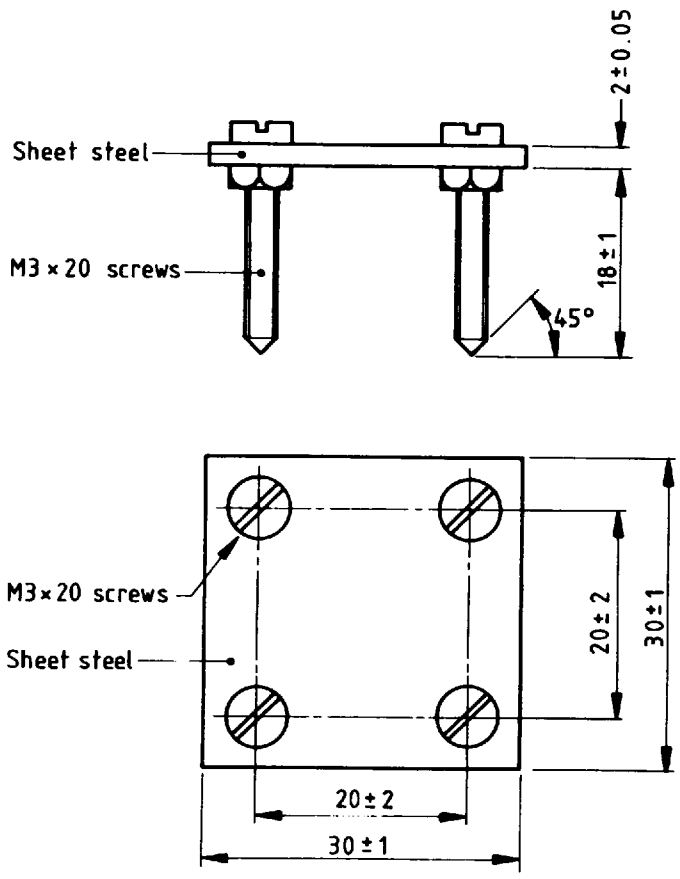

All dimensions are in millimetres.

Figure 10. Thermocouple weight for resilient materials

Licensed copy:Gravesham Borough Council, 16/03/2006, Uncontrolled Copy, © BSI

Publications referred to

BS 476	Fire tests on building materials and structures Part 21 Methods for determination of the fire resistance of loadbearing elements of construction Part 22 Methods for determination of the fire resistance of non-loadbearing elements of construction Part 23 Methods for determination of the contribution of components to the fire resistance of a structure Part 24 Method for determination of the fire resistance of ventilation ducts
BS 4422	Glossary of terms associated with fire
BS 4937	International thermocouple reference tables Part 4 Nickel-chromium/nickel-aluminium thermocouples. Type K Part 5 Copper/copper nickel thermocouples. Type T
PD 6496*	A comparison between the technical requirements of BS 476 : Part 8 : 1972 and other relevant international standards and documents on fire resistance tests
ISO 834	Fire resistance tests — Elements of building construction
ISO 3008*	Fire resistance tests — Door and shutter assemblies
ISO 3009*	Fire resistance tests — Glazed elements
EUR 8750*	Testing and classification of the resistance to fire of structural building components

*Referred to in the foreword only.

Licensed copy:Gravesham Borough Council, 16/03/2006, Uncontrolled Copy, © BSI

This British Standard, having been prepared under the direction of the Fire Standards Committee, was published under the authority of the Board of BSI and comes into effect on 29 May 1987.

©British Standards Institution, 1987

ISBN 0 580 15897 7

The following BSI references relate to the work on this standard: Committee reference FSM/1 Draft for comment 84/38456 DC

British Standards Institution. Incorporated by Royal Charter, BSI is the independent national body for the preparation of British Standards. It is the UK member of the International Organization for Standardization and UK sponsor of the British National Committee of the International Electrotechnical Commission.

In addition to the preparation and promulgation of standards, BSI offers specialist services including the provision of information through the BSI Library and Standardline Database; Technical Help to Exporters; and other services. Advice can be obtained from the Enquiry Section, BSI, Milton Keynes MK14 6LE, telephone 0908 221166, telex 825777.

Copyright. Users of British Standards are reminded that copyright subsists in all BSI publications. No part of this publication may be reproduced in any form without the prior permission in writing of BSI. This does not preclude the free use, in the course of implementing the standard, of necessary details such as symbols and size, type or grade designations. Enquiries should be addressed to the Publications Manager, BSI, Linford Wood, Milton Keynes MK14 6LE. The number for telephone enquiries is 0908 220022 and for telex 825777.

Contract requirements. A British Standard does not purport to include all the necessary provisions of a contract. Users of British Standards are responsible for their correct application.

Revision of British Standards. British Standards are revised, when necessary, by the issue either of amendments or of revised editions. **It is important that users of British Standards should ascertain that they are in possession of the latest amendments or editions.**

Automatic updating service. BSI provides an economic, individual and automatic standards updating service called **PLUS**. Details are available from BSI Enquiry Section at Milton Keynes, telephone 0908 221166, telex 825777.

Information on all BSI publications is in the *BSI Catalogue*, supplemented each month by *BSI News* which is available to subscribing members of BSI and gives details of new publications, revisions, amendments and withdrawn standards. Any person who, when making use of a British Standard, encounters an inaccuracy or ambiguity, is requested to notify BSI without delay in order that the matter may be investigated and appropriate action taken.

Committees responsible for this British Standard

The preparation of this British Standard was entrusted by the Fire Standards Committee (FSM/-) to Technical Committee FSM/1, upon which the following bodies were represented:

Association of British Roofing Felt Manufacturers
Association of Building Component Manufacturers Ltd.
Association of Structural Fire Protection Contractors and Manufacturers
British Coal
British Fire Services' Association
British Floor Covering Manufacturers' Association
British Plastics Federation
British Railways Board
British Rigid Urethane Foam Manufacturers' Association
British Wood Preserving Association
Cement and Concrete Association
Chemical Industries Association
Chief and Assistant Chief Fire Officers Association
Concrete Society
Department of Education and Science
Department of the Environment for Northern Ireland
Department of the Environment (Housing and Construction Industries)
Department of the Environment (Property Services Agency)
Department of Transport (Marine Directorate)
Electricity Supply Industry in England and Wales
Engineering Equipment and Materials Users' Association
Eurisol (UK) Association of Manufacturers of Mineral Insulation Fibres
Fibre Building Board Organisation (FIDOR)
Fibre Cement Manufacturers Association Limited
Fire Insurers Research and Testing Organisation (FIRTO)
Fire Offices Committee
Fire Protection Association
Flat Glass Manufacturers' Association
Flat Roofing Contractors' Advisory Board
Gypsum Products Development Association
Home Office
Institution of Fire Engineers
Mastic Asphalt Council and Employers' Federation
National Council of Building Materials Producers
National GRP Construction Federation
RAPRA Technology Ltd.
Royal Institute of British Architects
Steel Construction Institute
Timber Research and Development Association
United Kingdom Antimony Oxide Manufacturers' Association
United Kingdom Atomic Energy Authority
Warrington Fire Research Centre
Wood Wool Slab Manufacturers' Association
Yarsley Technical Centre Ltd.

The following bodies were also represented in the drafting of the standard, through subcommittees and panels:

Association of Builders Hardware Manufacturers
British Steel Industry
Department of the Environment (Building Research Establishment, Fire Research Station)
Door and Shutter Association
Electric Cable Makers' Confederation
Guild of Architectural Ironmongers
Hevac Association
Intumescent Fire Seals Association
National Association of Lift Makers
Suspended Ceilings Association
Thermal Insulation Manufacturers' and Suppliers' Association (TIMSA)

Amendments issued since publication

Amd. No.	Date of issue	Text affected

British Standards Institution · 2 Park Street London W1A 2BS · Telephone 01-629 9000 · Telex 266933

8708–8–2k–B

Licensed copy:Gravesham Borough Council, 16/03/2006, Uncontrolled Copy, © BSI

BS 476 : Part 20 : 1987

BSI

Amendment No. 1
published and effective from 30 April 1990
to BS 476 : Part 20 : 1987

Fire tests on building materials and structures
Part 20. Method for determination of the fire resistance of elements of construction (general principles)

Revised text

Licensed copy:Gravesham Borough Council, 16/03/2006, Uncontrolled Copy, © BSI

AMD 6487
April 1990

Foreword

In paragraph 6, after 'change are described in appendix A.' insert the following new matter.

'In some cases, it has been requested that tests be carried out according to a so-called 'hydrocarbon curve'. Although the heating regime specified in clause **3** is the exposure condition required by this standard, in order to avoid the possible confusion which might arise due to non-availability of a standard for such temperature/time curves, appendix D includes for information a heating regime which has been proposed in ISO/DIS 834 (as a preferred option) to represent special risk requirements such as may be encountered in offshore structures, etc.'

AMD 6487
April 1990

Contents

Insert the following at the end of the existing list of appendices.

'D Hydrocarbon curve'

AMD 6487
April 1990

Clause 0 Introduction

In paragraph 2, line 6, after '(see **A.1**)', insert 'and appendix D'.

AMD 6487
April 1990

Clause 2.3 fire resistance

Delete the existing clause and substitute the following.

'**2.3 fire resistance.** The time for which an element of building construction is able to withstand exposure to a standard temperature/time and pressure regime without a loss of its fire separating function or loadbearing function or both.'

AMD 6487
April 1990

Clause 6.1.2

Delete the existing third sentence and substitute the following.

'Where a reduced size furnace is used (i.e. a furnace with an opening not greater than 1.5 m x 1.5 m), the furnace aperture shall be greater in area than the exposed face of the specimen by a ratio of at least 1.5:1.'

AMD 6487
April 1990

Clause 6.1.8

Delete paragraph 1, the note and the first sentence of paragraph 2. Delete 'The' at the beginning of the second sentence of paragraph 2 and substitute 'In order to define the start of the test the'.

AMD 6487
April 1990

Clause 6.2.3 Mechanical or hydraulic loading

In line 5, after 'constant' insert '(i.e. ± 2 % as specified in **9.1.2**)'.

Delete the existing paragraph 2 and substitute the following.

'The load shall be applied uniformly over the surface so that at any single point the load does not exceed 10 % of the total load.'

AMD 6487
April 1990

Clause 6.4.2.1 Fixed specimen surface thermocouples

In line 2, after 'type T' insert ', type N'.

AMD 6487
April 1990

Clause 6.4.2.2 Roving surface thermocouple

In line 2, after 'type T' insert ', type N'.

AMD 6487
April 1990

Clause 6.4.2.5 Deformation measuring devices

Delete paragraph 2 and in paragraph 3, line 5, after 'shall be' insert 'displayed and'.

AMD 6487
April 1990

Clause 7 Examination of specimen

Delete the existing text, retaining the note, and substitute the following.

'A full and detailed specification of the test specimen shall be provided by the test sponsor prior to the installation of the test specimen at the laboratory. This specification shall be to a level of detail sufficient to allow the laboratory to conduct a detailed examination of the specimen in accordance with **C.3** before the test and to agree with the sponsor the accuracy of the specimen specification.'

AMD 6487
April 1990

Clause 11.1

In line 2, after 'time', insert 'rounded down'.

Licensed copy: Gravesham Borough Council, 16/03/2006, Uncontrolled Copy, © BSI

AMD 6487
April 1990

Clause A.3.6 Conditioning

In the penultimate paragraph, delete the information given for moisture content of timber and substitute the following.

Timber: all internal joinery applications	9 % to 12 %
structural loadbearing and non-loadbearing timber where the timber will be exposed or partially exposed to a heated or unheated internal environment	9 % to 12 %
all other applications, including structural loadbearing and non-loadbearing timber where the timber will be insulated from the ambient internal conditions of the building	16 ± 2 %

AMD 6487
April 1990

Clause C.2.2.4 Fixed surface temperature indicator

In the penultimate sentence, delete '30 s' and substitute '60 s'.

AMD 6487
April 1990

Clause C.3.1

Delete the existing clause and substitute the following.

'**C.3.1** Make a detailed examination of the test specimen comparing the constructional details against the specification provided by the sponsor. When it is not possible to verify aspects of the sponsors specification, state this in the test report.'

AMD 6487
April 1990

Clause C.7.1 Timing control thermocouple

Delete the existing text entirely and substitute *'Text deleted.'*.

AMD 6487
April 1990

Clause C.9 Furnace heating

In the first sentence, delete 'the timing control thermocouple' and substitute 'one of the furnace control thermocouples'.

AMD 6487
April 1990

Clause C.10.3.2

Delete the existing paragraph 8 and substitute the following.

'The use of the cotton pad shall be discontinued when the unexposed face of the construction indicates a temperature of 300 °C in the vicinity of the gap being evaluated. This temperature shall be measured by placing the centre of the roving thermocouple, specified in **6.4.2.2**, at a distance of between 30 mm and 70 mm to the side of, or below the gap, or by the nearest unexposed face fixed thermocouple if one is positioned within 30 mm to 70 mm of the gap.'

Licensed copy: Gravesham Borough Council, 16/03/2006, Uncontrolled Copy, © BSI

New appendix D

Insert the following new appendix D.

'Appendix D. Hydrocarbon curve

While the heating regime described in clause **3** is the fire exposure condition required by this standard and generally employed for building uses it is recognized that it may be inappropriate for certain special risk requirements. Such exposure environments will, more appropriately, be provided for in other standards which cover fire resistance tests of other than building constructions.

An example of one heating regime where the exposure is considered to equate with a large hydrocarbon fire which has recently been proposed in ISO/DIS 834 is as follows:

$$T = 1100\,[1 - 0.325 \exp(-\ 0.1667\ t) - 0.204 \exp(-\ 1.417\ t) - 0.471 \exp(-15.833\ t)]$$

where

T is the temperature increase (in °C);

t is the time at which temperature increase has occurred (in min).

It has to be recognized that, as well as varying the heating regime, detailed attention needs to be given to other test parameters and certain procedural details will also require alterations.'

Licensed copy:Gravesham Borough Council, 16/03/2006, Uncontrolled Copy, © BSI