BRITISH STANDARD

BS 9251:2005

Sprinkler systems for residential and domestic occupancies — Code of practice

ICS 13.220.20

Licensed copy:London Borough of Sutton , 13/06/2010, Uncontrolled Copy, © BSI

NO COPYING WITHOUT BSI PERMISSION EXCEPT AS PERMITTED BY COPYRIGHT LAW

British Standards

Committees responsible for this British Standard

The preparation of this British Standard was entrusted by Technical Committee FSH/18, Fixed firefighting systems, to Subcommittee FSH/18/2, Sprinkler systems, upon which the following bodies were represented:

ABI — Association of British Insurers

Association of Building Engineers

BASA — British Automatic Sprinkler Association

BRE/LPC Laboratories

British Fire Consortium

British Plastics Federation

British Pump Manufacturers' Association

British Fire Protection Systems Association

Chief and Assistant Chief Fire Officers' Association

Copper Development Association

District Surveyors' Association

Fire Sprinkler Association

Home Office

IFS — Institute of Fire Safety

London District Surveyors' Association

London Fire and Emergency Planning Authority

National Fire Sprinkler Network

ODPM — represented by BRE

ODPM — Construction Directorate

Powder Actuated Systems Association

Water UK

Co-opted member

This British Standard was published under the authority of the Standards Policy and Strategy Committee on 31 January 2005

© BSI 31 January 2005

First published as DD 251 April 2000
First edition as BS 9251 January 2005

Amendments issued since publication

Amd. No.	Date	Comments

The following BSI references relate to the work on this British Standard:
Committee reference FSH/18/2

ISBN 0 580 44816 9

Licensed copy:London Borough of Sutton , 13/06/2010, Uncontrolled Copy, © BSI

Contents

		Page
Committees responsible		Inside front cover
Foreword		ii
Introduction		1
1	Scope	8
2	Normative references	8
3	Terms and definitions	8
4	Consultation	10
5	Design	11
6	Installation, commissioning and documentation	16
7	Maintenance	18
Annex A (normative) Hydraulic calculation		19
Annex B (normative) Pipework support		22
Bibliography		23
Figure 1a) — Typical mains fed sprinkler system installation control details (unmetered supply)		2
Figure 1b) — Typical mains fed sprinkler system installation control details — For new buildings (metered domestic supply)		3
Figure 2a) — Typical in line fire pump fed sprinkler system installation control details (unmetered supply)		4
Figure 2b) — Typical in line fire pump fed sprinkler system installation control details (metered domestic supply)		5
Figure 3a) — Typical stored water and fire pump fed sprinkler system installation control details (unmetered supply)		6
Figure 3b) — Typical stored water and fire pump fed sprinkler system installation control details (metered domestic supply)		7
Figure 4 — Typical sprinkler connection, installation control and monitoring details		15
Table A.1 — Pressure loss in 1 m of copper pipe for a water flow rate of 60 l/min		19
Table A.2 — Pressure loss in 1 m of CPVC pipe for a water flow rate of 60 l/min		19
Table A.3 — Pressure loss in 1 m of steel pipe for a water flow rate of 60 l/min		20
Table A.4 — Values of C for steel, copper and CPVC		20
Table A.5 — The equivalent length of copper pipe for the pressure loss due to the bend for a water flow rate of 60 l/min		20
Table A.6 — Copper: equivalent lengths of pipe for fittings (in metres of pipe)		21
Table A.7 — Steel: equivalent lengths of pipe for fittings (in metres of pipe)		21
Table A.8 — CPVC: equivalent lengths of pipe for fittings (in metres of pipe)		21
Table B.1 — Maximum spacing of fixings for copper and stainless steel pipework		22
Table B.2 — Maximum spacing of fixings for steel pipework		22
Table B.3 — Maximum spacing of fixings for CPVC pipework		22

Licensed copy:London Borough of Sutton , 13/06/2010, Uncontrolled Copy, © BSI

Foreword

This British Standard has been prepared by a Task Group from Technical Committee FSH/18/2. It supersedes DD 251:2000, which is withdrawn.

It gives recommendations for the design, installation, components, water supplies, commissioning and maintenance of fire sprinkler systems for use specifically in residential and domestic occupancies. It is intended for the use of designers, engineers, architects, surveyors, contractors, installers and authorities having jurisdiction. Sprinkler protection for other buildings and industrial plant is specified in BS 5306-2 and BS EN 12845.

Fire sprinkler systems for domestic and residential application are designed to provide an additional degree of protection of life and property, above that already achieved by the installation of smoke and/or fire detectors and systems. This British Standard presumes that the sprinkler protection will form part of an integrated fire safety system as part of the building design.

Product certification/inspection/testing. Users of this British Standard are advised to consider the desirability of third-party certification/inspection/testing of product conformity with this British Standard. Appropriate conformity attestation arrangements are described in BS EN ISO 9001. Users seeking assistance in identifying appropriate conformity assessment bodies or schemes may ask BSI to forward their enquiries to the relevant association.

The recommendations contained in this British Standard result from the best technical information available to the committee at the time of writing. Firefighting and life protection encompasses a wide field of endeavour and as such it is impracticable to cover every possible factor or circumstance that might affect implementation of this British Standard. Therefore the design and installation of any system should be entrusted to a suitably qualified and experienced sprinkler contractor.

Attention is drawn to the requirements of BS 6700 with special regard to back-flow prevention and to BS 1710 for guidance on identification and marking of pipework.

This publication does not purport to include all the necessary provisions of a contract. Users are responsible for its correct application.

Compliance with a British Standard does not of itself confer immunity from legal obligations.

Attention is drawn to the requirements of the Water Regulations [1], [2], [3].

Summary of pages

This document comprises a front cover, an inside front cover, pages i and ii, pages 1 to 23 to and a back cover.

The BSI copyright notice displayed in this document indicates when the document was last issued.

Licensed copy:London Borough of Sutton , 13/06/2010, Uncontrolled Copy, © BSI

© BSI 31 January 2005

Introduction

Sprinkler systems have demonstrated their value in protecting life and property in industrial and commercial applications for many years. The advent of sprinklers that operate at an earlier stage in the development of a fire, plus the recognition that the largest numbers of deaths from fire occur in the home, have led to the introduction of sprinkler systems specifically designed for residential and domestic occupancies.

A correctly designed and installed sprinkler system can detect and control a fire at an early stage of development and activate an alarm. Operation of the system will rapidly reduce the rate of production of heat and smoke, allowing more time for the occupants to escape to safety or be rescued.

This British Standard accordingly covers design, installation, components, water supplies, maintenance and testing of residential and domestic sprinkler systems installed for life safety purposes.

Residential and domestic fire sprinkler systems are systems in accordance with this standard and consist of a water supply, backflow prevention valve (check valve), stop valve, priority demand valve (where required), automatic alarm system (both internal and external) and pipework to quick response sprinklers. The sprinklers are fitted at specified locations, the appropriate sprinkler type being used for each location. The main elements of a typical domestic fire sprinkler system are shown in Figure 1a) and Figure 1b), Figure 2a) and Figure 2b) and Figure 3a) and Figure 3b).

Sprinklers operate at a pre-determined temperature to discharge water over a known area below. The flow of water thus initiated causes the sounding of an alarm. Only those sprinklers operate which are individually heated above their operating temperature by the heat from the fire.

The provision of a sprinkler system does not negate the need for other fire precautions or practical measures, which may include structural fire resistance, escape routes, smoke or fire detectors and safe housekeeping practices. Even with the installation of a sprinkler system, normal actions on the discovery of a fire should be taken, such as immediate evacuation and the calling of the fire service. The sprinkler system should be turned off by the fire service when it is deemed safe to do so.

Sprinkler system maintenance is not complex but is essential (see Clause **7**). It is important that owners and occupiers pay particular attention to precautions issued by the sprinkler contractor, such as the avoidance of obstructions to the sprinkler, or the painting of the sprinkler head.

Licensed copy:London Borough of Sutton , 13/06/2010, Uncontrolled Copy, © BSI

Licensed copy:London Borough of Sutton , 13/06/2010, Uncontrolled Copy, © BSI

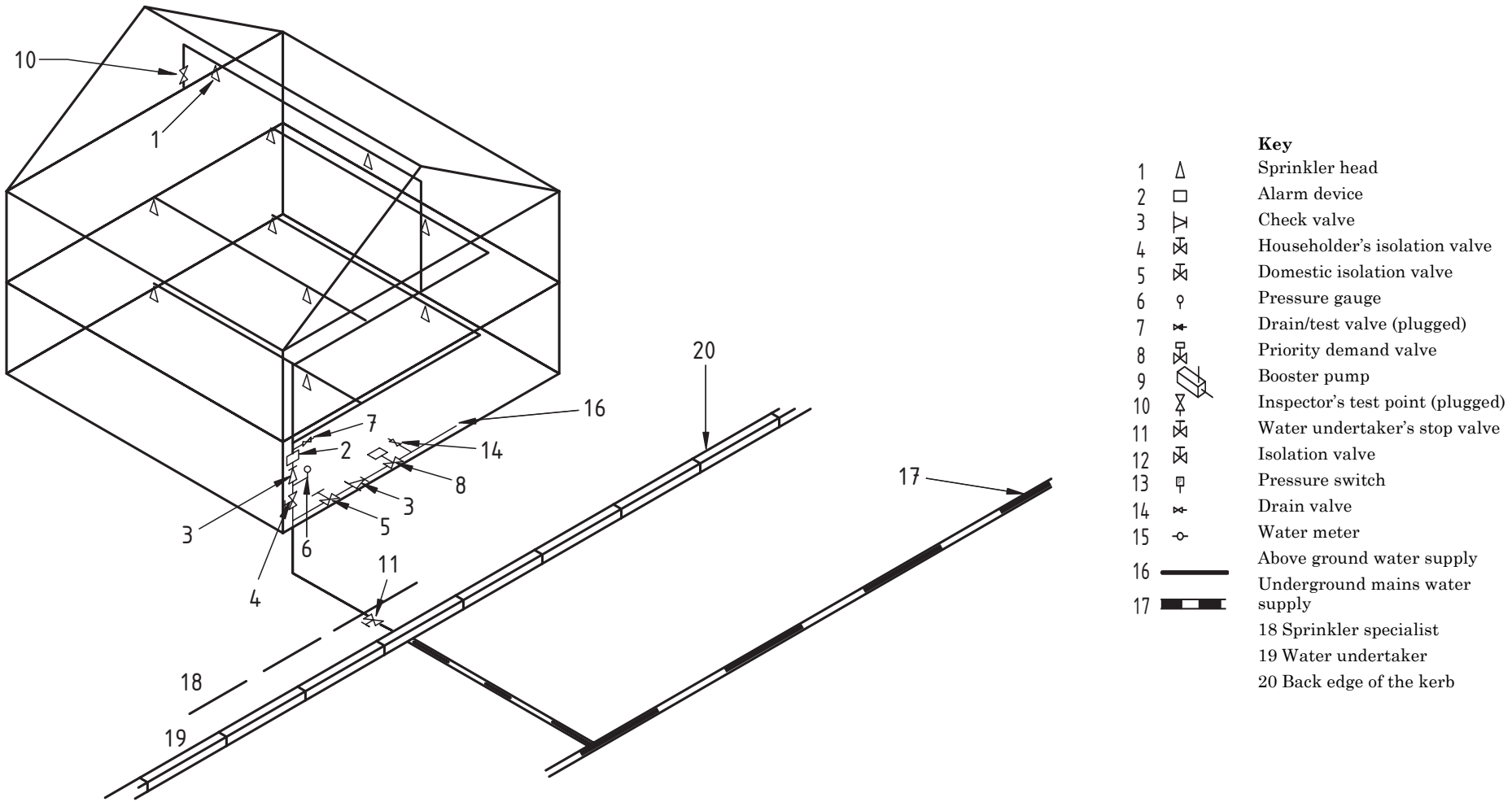

NOTE 1 Employing one combined system for drinking water and sprinkler water.

NOTE 2 Fluid category 2 water supply no additives.

NOTE 3 Check valve to comply with fluid category 2 no additives.

Figure 1a) — Typical mains fed sprinkler system installation control details (unmetered supply)

Licensed copy:London Borough of Sutton , 13/06/2010, Uncontrolled Copy, © BSI

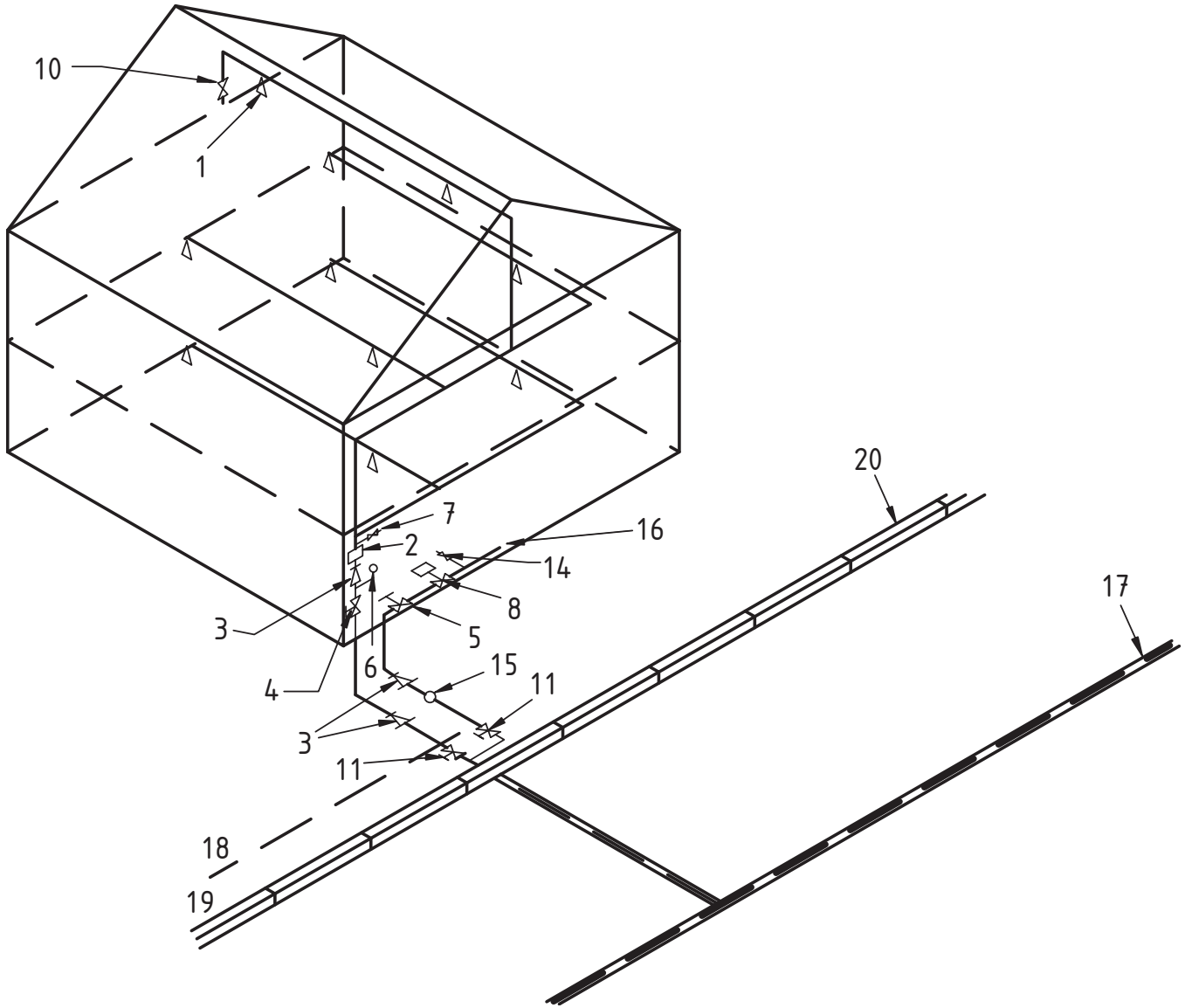

Key

1 Sprinkler head
2 Alarm device
3 Check valve
4 Householder's isolation valve
5 Domestic isolation valve
6 Pressure gauge
7 Drain/test valve (plugged)
8 Priority demand valve
9 Booster pump
10 Inspector's test point (plugged)
11 Water undertaker's stop valve
12 Isolation valve
13 Pressure switch
14 Drain valve
15 Water meter
16 Above ground water supply
17 Underground mains water supply
18 Sprinkler specialist
19 Water undertaker
20 Back edge of the kerb

NOTE 1 Fluid category 2 water supply no additives.

NOTE 2 Check valve to comply with fluid category 2 no additives.

Figure 1b) — Typical mains fed sprinkler system installation control details — For new buildings (metered domestic supply)

Licensed copy:London Borough of Sutton , 13/06/2010, Uncontrolled Copy, © BSI

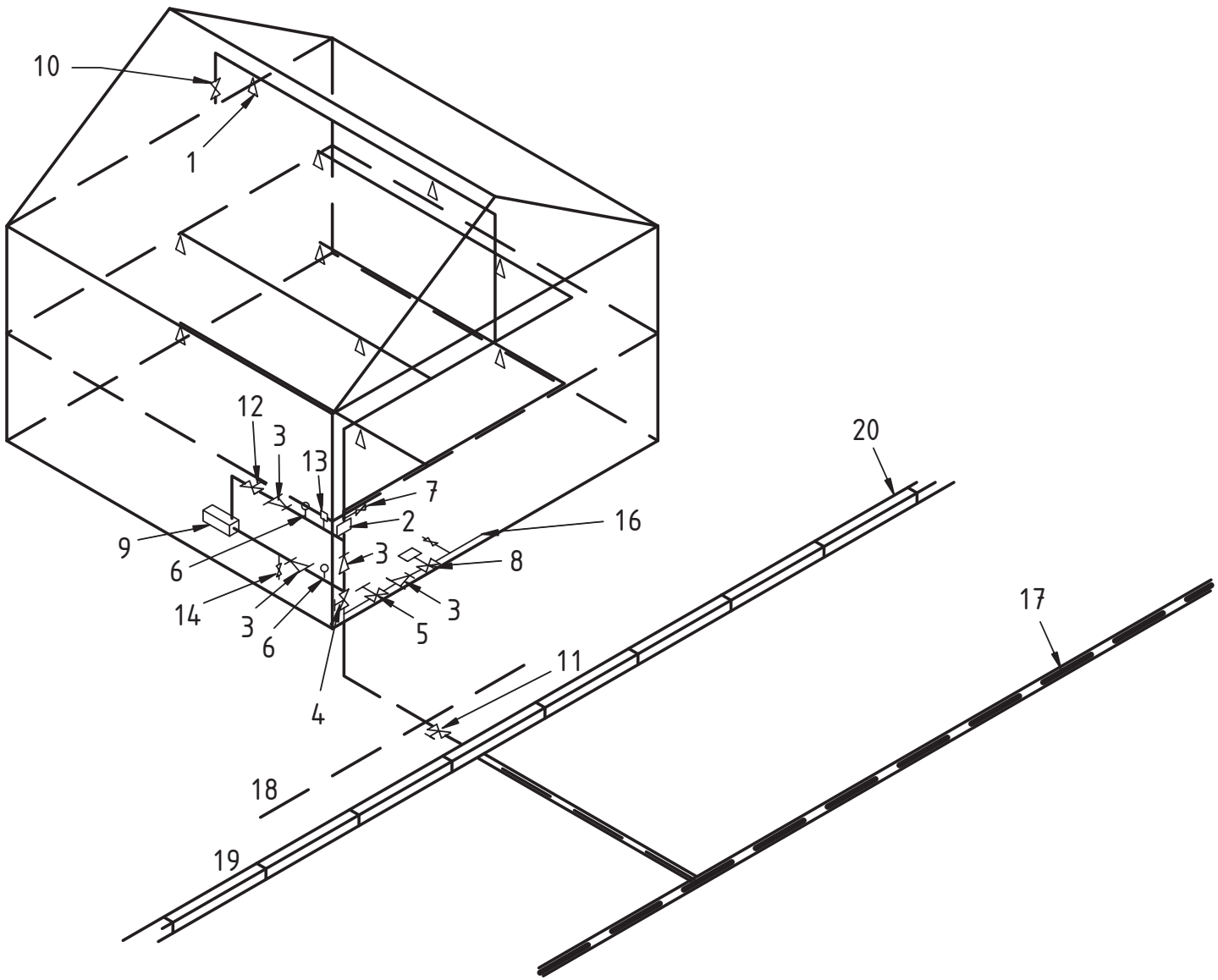

Key

1 Sprinkler head
2 Alarm device
3 Check valve
4 Householder's isolation valve
5 Domestic isolation valve
6 Pressure gauge
7 Drain/test valve (plugged)
8 Priority demand valve
9 Booster pump
10 Inspector's test point (plugged)
11 Water undertaker's stop valve
12 Isolation valve
13 Pressure switch
14 Drain valve
15 Water meter
16 Above ground water supply
17 Underground mains water supply
18 Sprinkler specialist
19 Water undertaker
20 Back edge of the kerb

NOTE 1 Fluid category 2 water supply no additives.

NOTE 2 Check valve to comply with fluid category 2 no additives.

Figure 2a) — Typical in line fire pump fed sprinkler system installation control details (unmetered supply)

© BSI 31 January 2005

Licensed copy:London Borough of Sutton , 13/06/2010, Uncontrolled Copy, © BSI

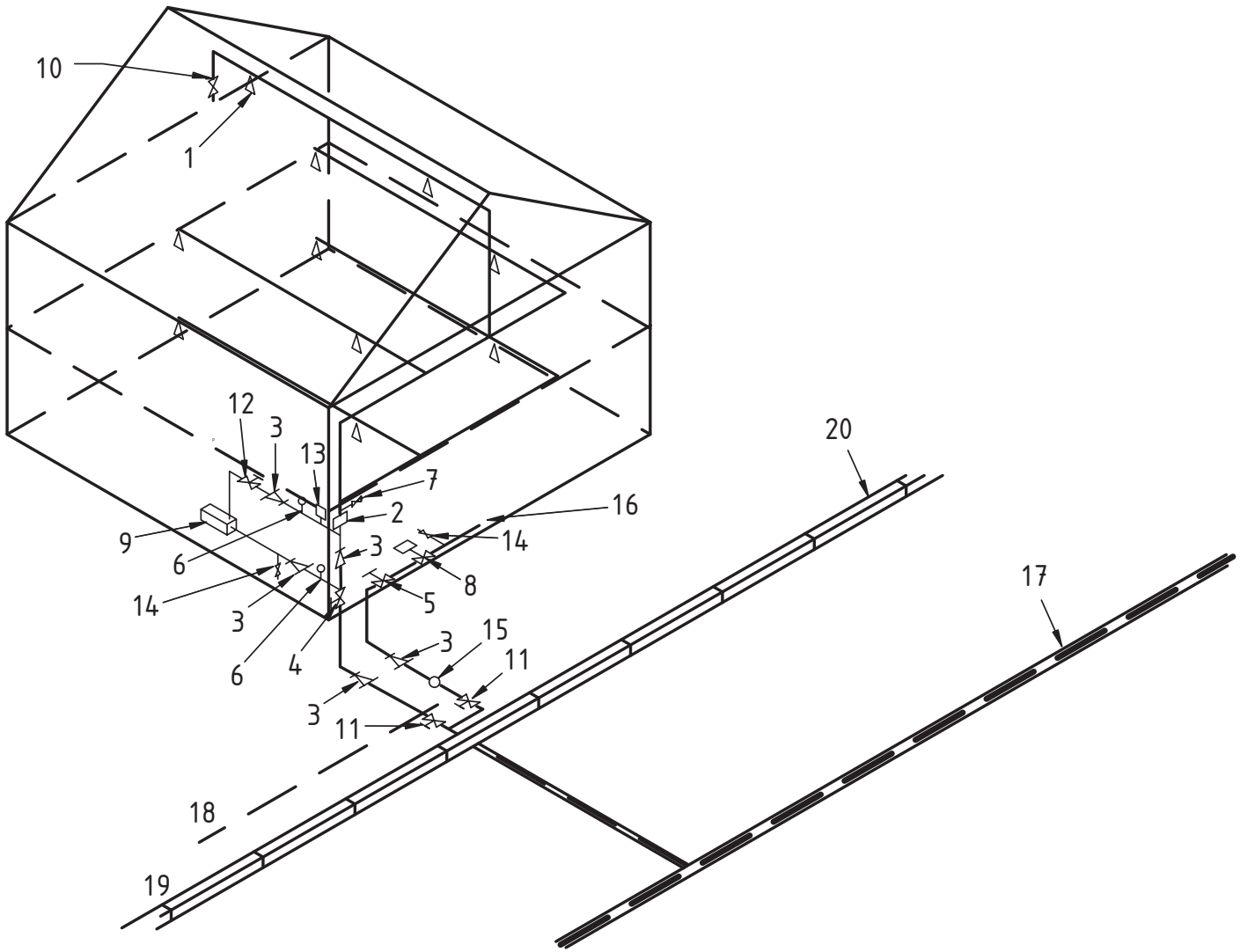

Key

1 Sprinkler head
2 Alarm device
3 Check valve
4 Householder's isolation valve
5 Domestic isolation valve
6 Pressure gauge
7 Drain/test valve (plugged)
8 Priority demand valve
9 Booster pump
10 Inspector's test point (plugged)
11 Water undertaker's stop valve
12 Isolation valve
13 Pressure switch
14 Drain valve
15 Water meter
16 Above ground water supply
17 Underground mains water supply
18 Sprinkler specialist
19 Water undertaker
20 Back edge of the kerb

NOTE 1 Fluid category 2 water supply no additives.

NOTE 2 Check valve to comply with fluid category 2 no additives.

Figure 2b) — Typical in line fire pump fed sprinkler system installation control details (metered domestic supply)

Licensed copy:London Borough of Sutton , 13/06/2010, Uncontrolled Copy, © BSI

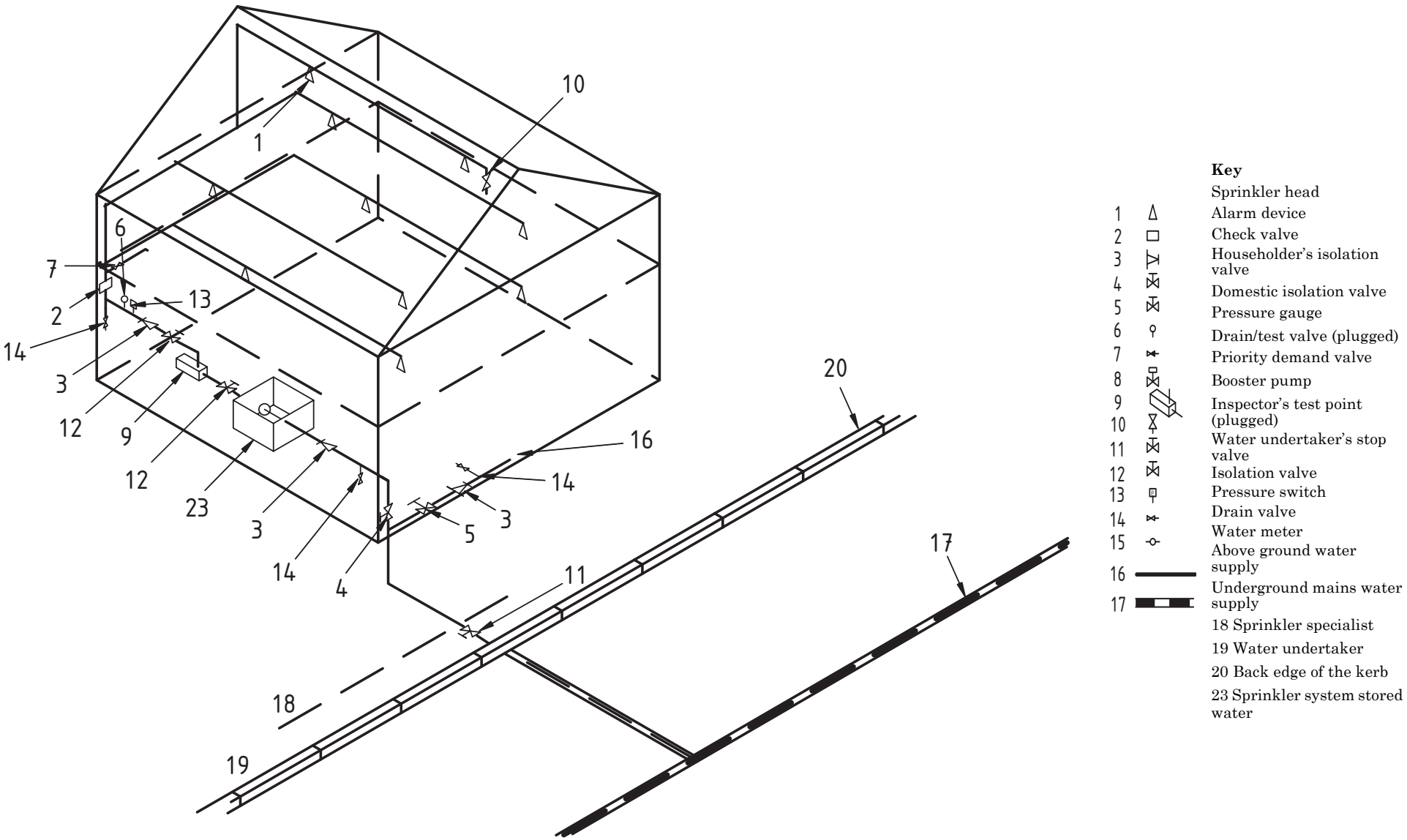

NOTE 1 Fluid category 2 water supply no additives.

NOTE 2 Check valve to comply with fluid category 2 no additives.

Figure 3a) — Typical stored water and fire pump fed sprinkler system installation control details (unmetered supply)

© BSI 31 January 2005

Licensed copy:London Borough of Sutton , 13/06/2010, Uncontrolled Copy, © BSI

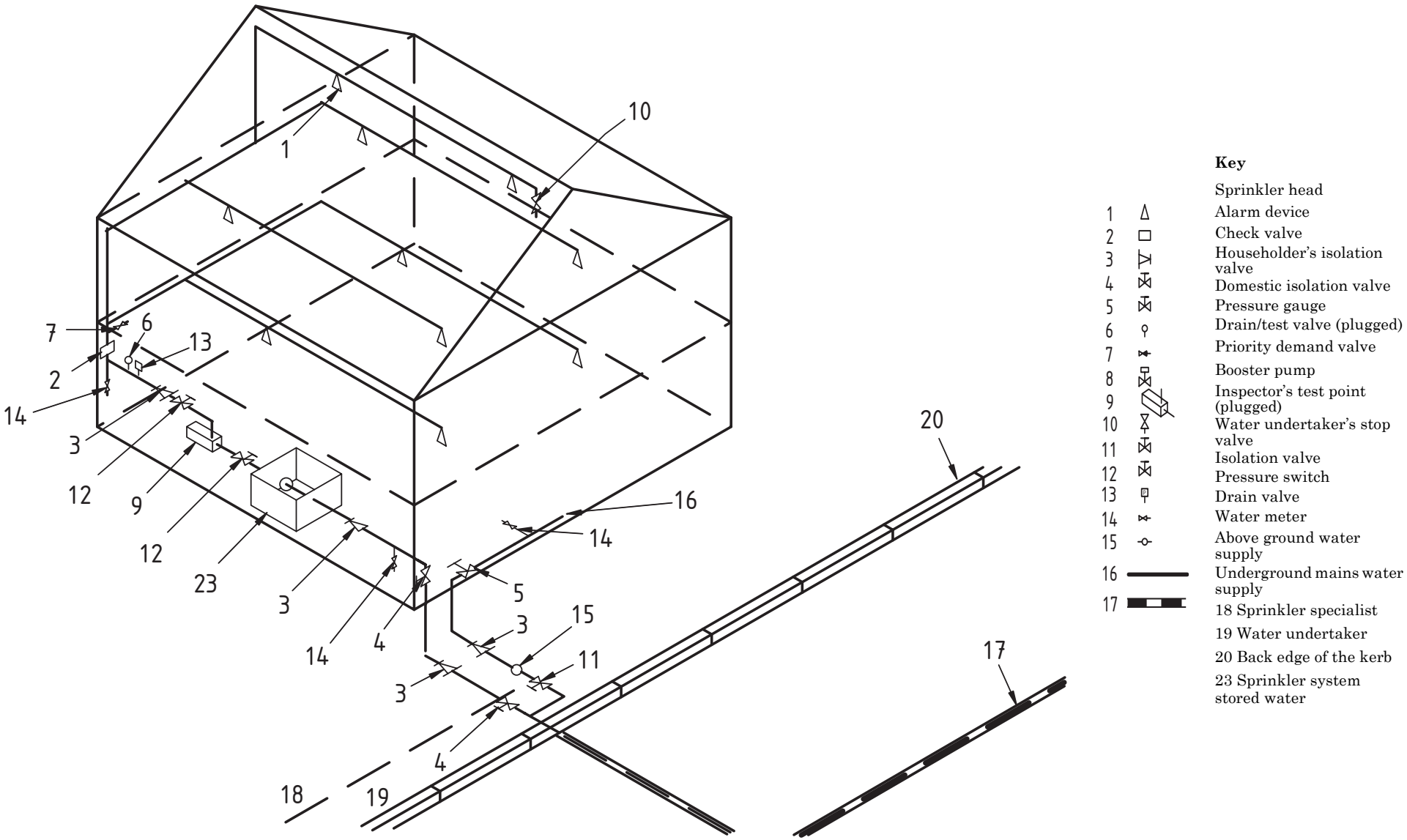

NOTE 1 Fluid category 2 water supply no additives.

NOTE 2 Check valve to comply with fluid category 2 no additives.

Figure 3b) — Typical stored water and fire pump fed sprinkler system installation control details (metered domestic supply)

© BSI 31 January 2005

Licensed copy:London Borough of Sutton , 13/06/2010, Uncontrolled Copy, © BSI

1 Scope

This British Standard gives recommendations for the design, installation, components, water supplies and backflow protection, commissioning, maintenance and testing of fire sprinkler systems installed for life safety purposes with additional benefits for property protection in residential and domestic occupancies.

Residential occupancies, for multiple occupation, not exceeding 20 m in height, include apartments, residential homes, houses of multiple occupancy (HMOs), blocks of flats, boarding houses, aged persons homes, nursing homes, residential rehabilitation accommodation and dormitories.

Domestic occupancies include individual dwelling houses, individual flats, maisonettes and transportable homes.

NOTE Care should be taken particularly when specifying residential sprinkler systems that the fire/fuel loading in any given occupancy does not exceed that which would normally be found in a residential living room, kitchen and bedrooms. If the fire/fuel loading is greater than that of a conventional residential occupancy then consideration should be given to installing a sprinkler installation in accordance with BS 5306-2/BS EN 12845. Key indicators of high fire loading include significant volumes of video tapes, books, paper and institutional catering facilities.

2 Normative references

The following normative documents contain provisions which, through reference in this text, constitute provisions of this British Standard. For dated references, subsequent amendments to, or revisions of, any of these publications do not apply. For undated references, the latest edition of the publication referred to applies.

BS 21, *Specification for pipe threads for tubes and fittings where pressure-tight joints are made on the threads (metric dimensions).*

BS 476, *Fire tests on building materials and structures.*

BS 5839-6, *Fire detection and alarm systems for buildings — Part 6: Code of practice for the design and installation of fire detection and alarm systems in dwellings.*

BS 6700, *Specification for design, installation, testing and maintenance of services supplying water for domestic use within buildings and their curtilages.*

DD 252, *Components for residential sprinkler systems — Test methods and specification for residential sprinklers.*

BS EN 1057, *Copper and copper alloys — Seamless round copper tubes for water and gas in sanitary and heating applications.*

BS EN 12259-1, *Fixed firefighting systems — Components for sprinkler and water spray systems — Part 1: Sprinklers.*

BS EN 29453 (ISO 9453), *Soft solder alloys — Chemical compositions and forms.*

ISO 7-1, *Pipe threads where pressure-tight joints are made on the threads — Part 1: Dimensions, tolerances and designation.*

ISO 65, *Carbon steel tubes suitable for screwing in accordance with ISO 7-1.*

3 Terms and definitions

For the purposes of this British Standard the following terms and definitions apply.

3.1
alarm device
electrical or mechanical device for detecting water flow into the system and sounding an alarm

3.2
alarm system
electrical or mechanical system audible internally and externally, with a built-in precaution to avoid spurious alarms

NOTE An electrical system should be mains powered and have a back up battery of adequate capacity.

© BSI 31 January 2005

3.3
alarm test valve
valve through which water may be discharged to test the operation of alarm system

3.4
backflow prevention device
type EA verifiable single check valve which permits water to flow from upstream but not in the reverse direction

3.5
cistern
stored water supply with cover

NOTE Attention is drawn to the Water Regulations [1], [2], [3] which cover requirements for cisterns.

3.6
concealed sprinkler
recessed sprinkler with a cover plate that disengages when heat is applied

3.7
domestic occupancy
individual dwelling for occupation as a single family unit used or constructed or adapted to be used wholly or principally for human habitation, such as individual dwelling houses, individual flats, maisonettes and transportable homes, with a maximum individual room size of 40 m^2

NOTE In the preparation of this standard it was thought necessary to reconsider areas of sprinkler operation and this will be subject to further investigation.

3.8
experienced sprinkler contractor
contractor who is suitably qualified and experienced and has independent documentation providing evidence of this

3.9
fire pump
pump that is automatically operated in the event of a fire which supplies water to a sprinkler system from a water storage facility or from a mains supply

3.10
fusible link sprinkler
sprinkler which opens when an element provided for that purpose melts

3.11
glass bulb sprinkler
sprinkler which opens when a liquid-filled glass bulb bursts

3.12
pendent sprinkler
sprinkler in which the nozzle directs the water downwards

3.13
priority demand valve
valve for isolating the supply to the domestic service in the event of sprinkler operation

3.14
quick response sprinkler
sprinkler with quick response temperature sensing element which operates to allow water to discharge in accordance with BS EN 12259-1

3.15
recessed sprinkler
sprinkler in which all or part of the heat sensing element is above the lower plane of the ceiling

Licensed copy:London Borough of Sutton , 13/06/2010, Uncontrolled Copy, © BSI

3.16
residential pattern sprinkler
sprinkler which gives an outward and downward water discharge, suitable for use in domestic and residential occupancy

3.17
residential occupancy
occupancy for multiple occupation not exceeding 20 m in height, with a maximum individual room size of 180 m^2, such as apartments, residential homes, houses of multiple occupancy (HMOs), blocks of flats, boarding houses, aged persons homes, nursing homes, residential rehabilitation accommodation and dormitories

NOTE 1 Where multiple occupation buildings exceed 20 m in height, special circumstances need to be considered and the authority having jurisdiction should be consulted. This matter is receiving the attention of the relevant BSI committee with a view to issuing an amendment.

NOTE 2 This occupancy classification is not suitable for secure accommodation, asylum centres and large, open, communal dormitories or equivalent hazards.

3.18
room
area, enclosed by walls and a ceiling, which may have openings to an adjoining room or adjoining rooms provided such openings have a lintel depth of at least 200 mm

3.19
service pipe
pipe supplying water from a water supply to any premises that are subject to water pressure from that water supply

3.20
sidewall pattern sprinkler
sprinkler which gives an outward half paraboloid pattern of water discharge

3.21
stop valve
manually operated valve for controlling the flow of water into the system pipework which is normally kept in the open position

3.22
subsidiary alternate system
portion of a sprinkler system which is capable of being charged with air or water

3.23
upright sprinkler
sprinkler in which the nozzle directs the water upwards

3.24
wet pipe system
sprinkler system which is designed to be permanently charged with water

4 Consultation

Where a sprinkler system or an extension or alteration to a sprinkler system is being considered for new or existing buildings, the following should be consulted and, where necessary, their approval sought at an early stage:

a) the water undertaker (see *Guidelines for the supply of water to fire sprinkler systems* [4]);

b) the fire authority;

c) the building control body;

d) the insurer(s) of the dwelling and dwelling contents.

Licensed copy:London Borough of Sutton , 13/06/2010, Uncontrolled Copy, © BSI

© BSI 31 January 2005

Licensed copy:London Borough of Sutton , 13/06/2010, Uncontrolled Copy, © BSI

5 Design

5.1 Water supplies

5.1.1 *Types of supply*

Sprinkler systems should be connected to one of the following water supplies:

a) a mains water supply;

b) pressure tank or vessel;

c) automatic fire pump drawing from a stored water facility;

d) automatic fire pump drawing water from a mains water supply or an elevated storage cistern;

e) gravity fed stored water system.

5.1.2 *Supply characteristics*

When planning to use a mains water supply to feed a sprinkler system, prior to installation the minimum mains pressure and capacity should be ascertained in conjunction with the water undertaker.

When using an existing service pipe the pressure should be checked and flow rate ascertained at the point of entry to the building.

5.2 Design and installation criteria

5.2.1 *System design and installation*

The system should be designed and installed by an experienced sprinkler contractor.

5.2.2 *System type*

A sprinkler system should be a wet pipe system, i.e. one that is permanently charged with water. Precautions should be taken to prevent the water freezing (see **6.1.4**).

5.2.3 *Extent of sprinkler protection*

Sprinkler protection should be provided in all parts of the dwelling, with the permitted exception of:

— bathrooms with a floor area of less than 5 m^2;

— cupboards and pantries with a floor area of less than 2 m^2 and where the least dimension does not exceed 1 m and the walls and ceilings are covered with non-combustible or limited-combustible materials;

— non communicating, attached buildings such as garages, boiler houses, etc.;

— crawl spaces.

NOTE 1 "Non communicating" means separated from the protected premises by a 30 min fire resisting construction in accordance with BS 476 or equivalent European Standard.

NOTE 2 Certain authorities may require 60 min fire resisting construction.

NOTE 3 Lift shafts are not excluded from protection.

5.2.4 *Hydraulic calculations*

Calculation of pressure losses in pipework should be carried out in accordance with Annex A to determine the recommended pipe sizes to meet the performance recommendations in **5.2.5** with the water pressure and flow rate at the lowest flow/pressure characteristics anticipated. Where systems are to be directly mains fed, the size of service pipe to the premises that will feed the sprinkler system should be agreed with the water supplier.

5.2.5 ***System flow rate***

5.2.5.1 *Sprinkler flow rates*

A sprinkler system should be capable of providing flow rates at the sprinklers of not less than:

a) for domestic occupancies:

1) 60 l/min through any single sprinkler; or

2) 42 l/min through each of two sprinklers operating simultaneously in a single room;

b) for residential occupancies:

1) 60 l/min through any single sprinkler; or

2) 42 l/min for each sprinkler operating simultaneously up to a maximum of four sprinklers in a single room.

5.2.5.2 *Residential pattern sprinklers*

Where residential pattern sprinklers are used in domestic occupancies, the system should be capable of providing flow rates to permit one or two sprinklers to operate simultaneously at not less than the flow rates given in **5.2.5.1**a) or their approval listed discharge performance, **whichever is the greater**, plus any flow for alarm purposes (see **5.3.3**).

Where residential pattern sprinklers are used in residential occupancies, the system should be capable of providing flow rates to permit up to four sprinklers to operate simultaneously at not less than the flow rates given in **5.2.5.1**b) or their approval listed discharge requirements, **whichever is the greater**, plus any flow for alarm purposes (see **5.3.3**).

5.2.5.3 *Minimum operating pressure*

The minimum operating pressure at any sprinkler should not be less than 0.5 bar.

5.2.6 ***Flow rate requirements for mains water supply connections***

Where the mains water supply connection serves only the sprinkler system, the system should be capable of providing flow rates at the sprinkler heads in accordance with the recommendations of **5.2.5**.

Where the mains water supply connection serves both the sprinkler system and the domestic or residential occupancy supply, the sprinkler system should be capable of providing flow rates at the sprinkler heads in accordance with the recommendations of **5.2.5** by:

a) the operation of an automatic priority demand valve; or

b) for domestic occupancies, the flow rate recommended in **5.2.5** plus at least 25 l/min;

c) for residential occupancies, the flow rate recommended in **5.2.5** plus the design demand for the residency but not less than 50 l/min.

When relying only on a direct mains water supply only 85 % of the water pressure and flow rates at the lowest flow/pressure characteristics anticipated should be allowed in the calculations.

Where the connection to the mains water supply serves more than one dwelling, the system should be capable of providing the flow rates at the sprinkler heads in accordance with the recommendations of **5.2.5** at times of simultaneous peak demand from all of the dwellings concerned.

Licensed copy:London Borough of Sutton , 13/06/2010, Uncontrolled Copy, © BSI

© BSI 31 January 2005

5.2.7 ***Stored water capacity***

Where a water storage cistern is used for both sprinkler and domestic purposes, the stored volume should be at least 110 % of that recommended for the sprinkler system and the domestic connection should be taken above the level of stored water calculated for the sprinkler system and for:

a) domestic occupancies should be calculated on the basis of maintaining actual pressures and flows for 10 min to whichever is the greater of:

1) single operating sprinkler situated in the hydraulically most favourable position;

2) a pair of operating sprinklers in a single room situated in the hydraulically most favourable position;

b) residential occupancies should be calculated on the basis of maintaining actual pressures and flows for 30 min to whichever is the greatest of:

— any combination of up to the maximum design number of sprinklers (not greater than four in number), operating in a single room, situated in the hydraulically most favourable position.

Where the cistern provides a totally dedicated water supply for sprinklers, a low level alarm should be provided and the amount of stored water can be calculated allowing for the proven rate of infill from the water main providing the reduced amount of stored water, should be at least 60 % of the amount calculated without infill.

5.2.8 ***Fire pump***

Where a pump is used to ensure the recommendations of **5.2.5** are met it should be:

a) located such that it is unlikely to be affected by a fire;

b) located where the temperature will be maintained above freezing;

c) protected electrically by suitable fusing;

d) protected against the effects of fire;

e) of sufficient capacity to ensure the recommendations of **5.2.5** are met;

f) suitably designed and manufactured such that testing is needed at not more than annual intervals;

g) operated automatically on demand and require manual shut down.

5.2.9 ***Sprinkler coverage and location***

5.2.9.1 *General*

Sprinklers should be installed in accordance with the supplier's instructions but not contravene the recommendations of this standard.

5.2.9.2 *Sprinkler spacing*

The maximum area protected by each sprinkler should be in accordance with its approved listing performance or 15 m^2, whichever is the lesser, and sprinklers should not be more than 4 m apart nor more than 2 m from any wall or partition. The distance between sprinklers within a room should not be less than 2 m.

5.2.9.3 *Sprinkler positioning*

Sprinklers should be positioned in accordance with the following recommendations.

a) Pendent and upright, residential and domestic sprinklers should have heat sensitive elements below the ceiling but not more than 100 mm below the ceiling.

b) Sidewall sprinklers should have heat sensitive elements within 100 mm to 150 mm below the ceiling.

c) The heat sensitive elements of recessed and concealed residential sprinklers should be positioned in accordance with the supplier's instructions.

d) The whole of the floor area and the walls from the floor up to 0.7 m below the ceiling should be wetted when the sprinklers are operated.

e) For sloping ceilings sprinklers should be positioned in accordance with the supplier's instructions.

Licensed copy:London Borough of Sutton , 13/06/2010, Uncontrolled Copy, © BSI

f) The sensitivity and discharge pattern of sprinklers should not be adversely affected by obstructions such as constructional beams or light fittings or other sprinkler heads.

g) The potential for a shielded fire to develop should be taken into account.

h) Sprinklers are not less than 50 mm from any wall or partition.

NOTE Concealed and recessed sprinklers may be used with the approval of the authority having jurisdiction.

5.3 Components

5.3.1 *Sprinklers*

5.3.1.1 *General*

Sprinklers should be of pendent, upright, sidewall, recessed or concealed types, suitable for service in residential and domestic application.

Sprinklers should have a quick response thermal sensitivity rating and be in accordance with DD 252. Only new equipment should be used. Any sprinkler head removed from a system should be discarded.

5.3.1.2 *Size of sprinklers*

Sprinklers should be threaded suitable for use with fittings threaded in accordance with ISO 7-1 and ISO 65, and BS 21.

5.3.1.3 *Temperature rating of sprinklers*

Fusible link sprinklers should be colour coded on the frame or sprinkler body; glass bulb sprinklers should be colour coded by the bulb liquid in accordance with BS EN 12259-1.

The temperature rating of the sprinklers should be:

a) the closest to but at least 20 °C greater than the highest anticipated ambient temperature of the location;

b) within the range of 79 °C to 100 °C when installed under glazed roofs.

NOTE For normal conditions in the United Kingdom, the sprinkler temperature ratings will be 57 °C or 68 °C.

5.3.2 *Pipes and fittings*

All pipes and fittings should be supplied and installed in accordance with the relevant British Standards.

NOTE Attention is drawn to the Water Regulations for requirements for pipes and fittings.

Capillary fittings should be jointed by soldering or brazing with alloys with a melting point of not less than 230 °C as specified in BS EN 29453.

Copper tube conforming to BS EN 1057 used in underground locations should be R220 (annealed), thick walled, factory plastic coated tube. In this case, fittings should be manipulative Type B. Brass fittings in underground locations should be immune to de-zincification.

Plastics and other pipes and fittings should be in accordance with a standard as recognized by the authority having jurisdiction and suitable for residential and domestic sprinkler systems and should be installed in accordance with the supplier's instructions.

5.3.3 *Valves and alarm devices*

5.3.3.1 *General*

Valves and alarm devices suitable for residential and domestic systems should be installed in accordance with the supplier's instructions.

5.3.3.2 *Alarm devices*

The system should have one of the following alarm devices which should be triggered by the flow of water to at least one sprinkler:

— an electrically operated flow switch connected to an audible alarm;

— a mechanically driven alarm taking the flow into account in the hydraulic calculations. or

Licensed copy:London Borough of Sutton , 13/06/2010, Uncontrolled Copy, © BSI

© BSI 31 January 2005

The system should have:

a) at least one internal audible alarm which can be easily heard in all parts of the building or dwelling, as appropriate; and

b) an audio-visual alarm positioned externally in a prominent position and clearly labelled "FIRE ALARM".

NOTE Means of escape criteria in flats and maisonettes is normally based on a defend in situ criteria and the alarm arrangements should be in accordance with the authority having jurisdiction.

5.3.3.3 *Valves*

The system should have the following (see Figure 4):

a) an appropriate back-flow prevention device to prevent mains water contamination;

b) a stop valve, of the full bore lever type to isolate sprinkler pipework from mains water supply;

NOTE 1 The valve should be locked in the open position to prevent accidental interruption of the water supply to the sprinkler system.

c) where appropriate, a priority demand valve;

d) an alarm test valve;

NOTE 2 A test facility should be provided at the end of the hydraulically most remote range pipe on the system consisting of not less than a 22 mm nominal diameter pipe and quick acting test valve with an outlet nozzle equivalent in size to the smallest sprinkler in the system.

e) a quick-acting drain and test valve facility fitted at the lowest point of the sprinkler pipework to allow functional testing and the complete draining of the sprinkler system, suitably sized to check the appropriate maximum flow rate specified in **5.2.5**, but not less than a 22 mm nominal diameter pipe size.

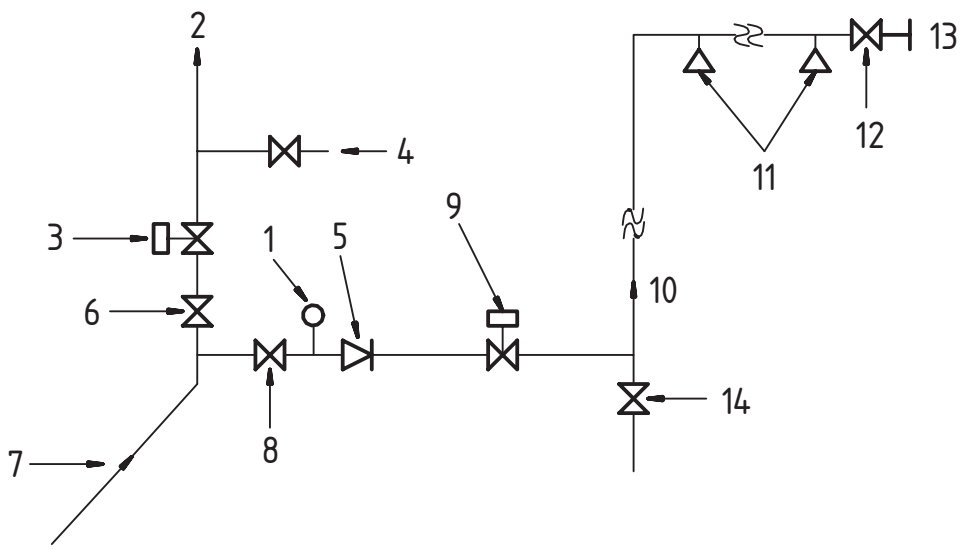

Key

1 Pressure gauge
2 To domestic drop off points
3 Priority demand valve (optional)
4 Drain valve
5 Backflow prevention device
6 Stop valve
7 Incoming cold water main
8 Lever operated fullway stop valve
9 Alarm device[a]
10 To sprinklers
11 Sprinkler heads
12 Lever operated fullway alarm test valve
13 Plug
14 Combined drain and alarm test valve[b]

[a] Alarm device with 12^{+25}_{0} s delay to prevent false alarms due to surge.

[b] Can be separate.

Figure 4 — Typical sprinkler connection, installation control and monitoring details

Licensed copy:London Borough of Sutton , 13/06/2010, Uncontrolled Copy, © BSI

5.3.4 ***Electrically operated devices***

The electrical supply to the fire pumps should be installed in such a way as to minimize the risk of electrical supply failure by having a separately fused connection taken after the meter and from the supply side of the domestic fuse box, using fire-resisting cable.

In all other instances the electrically operated devices should be capable of carrying out their function in the event of a complete failure of the mains electrical power supply in accordance with BS 5839-6.

6 Installation, commissioning and documentation

6.1 Installation

6.1.1 ***General***

Sprinkler systems should be installed in accordance with BS 6700.

Bending of copper piping should only be carried out by an approved method in accordance with BS 6700.

NOTE See also Water Research Centre (WRc) Guides [5].

6.1.2 ***Feasibility***

Before installation begins, the service pipe water supply should be tested to ensure that, when at its lowest hydraulic characteristic, the recommended flow rate and pressure can be achieved. If the recommended pressure and flow rate is not achieved the installation should not proceed and the designer should be consulted.

6.1.3 ***Pipework***

6.1.3.1 *Pipe sizes*

Pipe sizes should be determined by hydraulic calculations (see Annex A).

6.1.3.2 *Pipework support* (see Annex B)

Only metallic pipe fixings should be used. Batons and lock type clips should be fitted in close proximity to the sprinkler heads to ensure no movement occurs which would recoil heads into the ceiling or loft voids.

6.1.3.3 *Pipework through structural timbers*

Structural timbers should not be notched or bored in such a way that the integrity of the structure is compromised [see Building Regulations 2000 (applicable to England and Wales)] [6], the Technical Standards Scotland 1990 [7] and the Building Regulations (Northern Ireland) 2000 [8] and BS 6700].

6.1.4 ***Frost protection*** (see **5.2.2**)

It is essential that any water filled pipework which may be subjected to low temperatures should be protected against freezing at all times.

NOTE 1 Electrical trace heating and/or lagging or antifreeze solutions may be used.

NOTE 2 Water Regulations [1], [2], [3] forbid the employment of anti-freeze solutions where the system is directly connected to a mains water supply.

NOTE 3 Plastics pipe and fittings may be protected using glycerin based anti-freeze solutions. Glycol based anti-freeze solutions should not be used in plastic systems.

6.2 Commissioning

6.2.1 ***Leakage testing***

The sprinkler system should be tested for leakage by filling with water at the normal working pressure and checking visually for leaks at each joint. Any leaks found should be repaired.

The water supply to the system should be isolated and the system should be tested to a minimum of 1.5 times working pressure or 12 bar, whichever is the lesser, for 1 h. If the system fails to maintain pressure the leak should be found and corrected and this test repeated.

Licensed copy:London Borough of Sutton , 13/06/2010, Uncontrolled Copy, © BSI

 © BSI 31 January 2005

Licensed copy:London Borough of Sutton , 13/06/2010, Uncontrolled Copy, © BSI

6.2.2 ***Hydraulic test***

The sprinkler system should be tested to ensure that at least the flow rate specified in **5.2.5** can be achieved at the required pressure at the alarm test valve [see **5.3.3.3**d)]. If this flow rate at the required pressure cannot be achieved, the system should not be approved for use until the system has been corrected and the test given in this clause has been passed. The installer and the designer should correct the system.

6.2.3 ***Alarm test***

The alarm (and/or repeaters) should be heard in all habitable rooms in the premises protected by sprinklers coupled to the alarm device being tested, subject to the recommendations of **5.3.3.2**. The stated audibility should be achieved when there is a water flow of not more than 60 l/min through the alarm device under test.

6.2.4 ***Compliance***

On satisfactory completion of the commissioning tests by the experienced sprinkler contractor a certificate should be issued in accordance with **6.3.2**b).

6.3 Documentation

6.3.1 ***Presentation***

For new and extended systems all drawings and documents should bear as a minimum details of the system which should include:

a) the address and location of the premises or, in the case of transportable homes, the chassis or reference number;

b) the name and address of the approved contractor;

c) the name of the designer;

d) the date of installation.

6.3.2 ***Documents***

The following information should be provided by the approved contractor to the owner or occupier:

a) details of the authorities consulted and any response to consultation;

b) a general description of the system and a statement of compliance with this British Standard in the form of a signed Compliance Certificate, together with any deviations agreed with the authority having jurisdiction and justification for the deviation;

c) a layout drawing of the premises, which includes as-fitted details, showing the extent of the installation together with a set of the hydraulic calculations;

d) details of the water supplies which, if a town main, should include pressure and flow rate data at a specified location for the commissioned installation, with the time and date of the test;

e) an inspection and routine checking programme for the system;

NOTE The programme should include instructions on the actions to be taken in respect of operation of the system, faults, etc.

f) a list of components used, identifying supplier's name and parts reference number;

g) a 24 h emergency telephone number which can be used to obtain assistance;

h) a Log Book containing inspection, checking and maintenance documents, detailing a regular programme to be undertaken by an approved contractor;

i) essential information for the user e.g. "do not paint, cover or in any way impede the operation of a sprinkler head", "no modification should be made to any sprinkler equipment except in accordance with this British Standard".

The owner or occupier should also be supplied with spare sprinkler heads of the same design as those used in the system together with an appropriate tool for fitting them. In the event that replacement of a head is required these spare heads should not be fitted by the owner or occupier but should be fitted by a suitably qualified and experienced sprinkler contractor.

7 Maintenance

7.1 Responsibility

The system should be inspected and tested in accordance with **7.2**.

7.2 Inspecting and testing

The sprinkler system should be subject to an annual inspection and test by a suitably qualified and experienced sprinkler contractor to ensure the following:

a) the sprinklers' heat sensing capacity and their spray pattern is not impeded;

b) the minimum flow rate recommended in this British Standard is achieved at the drain and test valve;

c) the alarm is effective and can be heard in all parts of the building;

d) the system has not been modified except in accordance with this British Standard.

The system should be tested as follows.

— The system should be visually inspected wherever possible for leaks. Should a leak be suspected the pipework should be pressure tested to 1.5 times working pressure for 1 h.

— Both internal and external alarms should be left active so that their satisfactory operation can be audibly verified.

— The sprinkler system should be flow tested for 1 min at the drain and test valve or the highest test point of the installation pipework and ensure that the conditions of **5.2.5** are met.

— Stop valves should be exercised to ensure free movement.

— Where trace heating is installed check operation.

— The person carrying out the inspection should complete and sign the Log Book as recommended in **7.3**.

7.3 Log Book

The Log Book referred to in **6.3.2**h) should be completed giving details of:

a) the date of inspection;

b) details of all tests conducted and their results;

c) confirmation or otherwise of the sprinkler systems operational status;

d) confirmation or otherwise of the alarm systems operational status;

e) details of any recommendations or comments.

Licensed copy:London Borough of Sutton , 13/06/2010, Uncontrolled Copy, © BSI

© BSI 31 January 2005

Annex A (normative)
Hydraulic calculation

All pipework downstream of the alarm valve should be sized by hydraulic calculation.

a) The difference in static pressure between two connected points in a sprinkler system is given by the following formula:

static pressure difference, p = 0.1 h (bar) (A.1)

where

h is the vertical distance between the two points in metres (m).

b) The pressure loss due to pipe friction should be calculated from the Hazen-Williams formula (A.2) or taken from the appropriate tables, Table A.1, Table A.2 and Table A.3.

$$p = \frac{6{,}05 \times 10^5}{\mathrm{C}^{1{,}85} \times d^{4{,}87}} \times L \times Q^{1{,}85} \qquad \text{(A.2)}$$

where

p = pressure loss in pipe in bar;
Q = flow rate through pipe in litres per minute (l/min);
d = mean bore of pipe in millimetres (mm);
C = a constant for pipe material (see Table A.4);
L = equivalent length of straight pipe, bends and fittings in metres (m).

Table A.1 — Pressure loss in 1 m of copper pipe for a water flow rate of 60 l/min

Tube size mm	Mean size mm	Pressure loss bar
22	20.2	0.055 4
28	26.2	0.015 6
35	32.6	0.005 4
42	39.6	0.002 1
54	51.6	0.000 6

Table A.2 — Pressure loss in 1 m of CPVC pipe for a water flow rate of 60 l/min

Nominal tube size mm	I.D. mm	Pressure loss bar
20	22.20	0.031 4
25	27.97	0.010 2
32	35.41	0.003 2
40	40.59	0.001 7
50	50.88	0.000 5
65	61.54	0.000 2
80	74.93	0.000 1

Licensed copy:London Borough of Sutton , 13/06/2010, Uncontrolled Copy, © BSI

Table A.3 — Pressure loss in 1 m of steel pipe for a water flow rate of 60 l/min

Nominal tube size mm	I.D. mm	Pressure loss bar
20	21.63	0.052 9
25	27.31	0.017 0
32	35.97	0.004 4
40	41.86	0.002 1
50	52.98	0.000 7
65	68.67	0.000 2
80	80.68	0.000 1

The values of C shown in Table A.4 should be used in sprinkler system calculations.

Table A.4 — Values of C for steel, copper and CPVC

Material	C
Steel	120
Copper	140
CPVC	150

c) Equivalent lengths of pipe for pulled bends in copper tube (in metres of pipe)

Frictional pressure loss in copper pipework bends where the direction of water flow is changed through 45° or more should be calculated using (A.3).

$$\text{Equivalent length} = 7.65 \times 10^{-3} Q^{0.15} d^{0.87} \qquad \text{(A.3)}$$

where

Q = the water flow rate in litres per minute (l/min);

d = the tube bore in millimetres (mm).

The equivalent length of pipe for the pressure loss due to the bend for a water flow rate of 60 l/min is as given in Table A.5.

Table A.5 — The equivalent length of copper pipe for the pressure loss due to the bend for a water flow rate of 60 l/min

Tube size mm	Mean size mm	Equivalent length m
22	20.2	0.193 2
28	26.2	0.242 3
35	32.6	0.293 0
42	39.6	0.347 0
54	51.6	0.436 9

Licensed copy:London Borough of Sutton , 13/06/2010, Uncontrolled Copy, © BSI

© BSI 31 January 2005

d) Pressure loss equivalent lengths of pipe for fittings (in metres of pipe)

Equivalent lengths of copper, steel and CPVC pipe for fittings are given in Table A.6, Table A.7 and Table A.8.

Table A.6 — Copper: equivalent lengths of pipe for fittings (in metres of pipe)

Fittings	Nominal diameter mm				
	22	28	35	42	54
Tee run	0.068	0.10	0.13	0.16	0.22
Tee branch	1.00	1.40	1.80	2.30	3.10
90° capillary elbow	0.49	0.68	0.91	1.10	1.70
90° compression elbow	0.74	1.00	1.30	1.50	2.10

Table A.7 — Steel: equivalent lengths of pipe for fittings (in metres of pipe)

Fittings	Nominal diameter mm					
	20	25	32	40	50	65
90° screwed elbow	0.63	0.77	1.04	1.22	1.46	1.89
90° welded elbow	0.30	0.36	0.49	0.56	0.69	0.88
45° screwed elbow	0.34	0.40	0.55	0.66	0.76	1.02
Standard screwed tee or cross	1.25	1.54	2.13	2.44	2.91	3.81

Table A.8 — CPVC: equivalent lengths of pipe for fittings (in metres of pipe)

Fittings	Nominal diameter mm						
	20	25	32	40	50	65	80
Tee run	0.30	0.30	0.30	0.30	0.30	0.60	0.60
Tee branch	0.90	1.50	1.80	2.40	3.00	3.60	4.50
90° elbow	2.10	2.10	2.40	2.70	3.30	3.60	3.90
45° elbow	0.30	0.30	0.60	0.60	0.60	0.90	1.20
Coupling	0.30	0.30	0.30	0.30	0.30	0.60	0.60

Licensed copy:London Borough of Sutton , 13/06/2010, Uncontrolled Copy, © BSI

Annex B (normative)
Pipework support

Sprinkler system pipework should be supported at the intervals given in Table B.1, Table B.2 and Table B.3.

Table B.1 — Maximum spacing of fixings for copper and stainless steel pipework

Nominal diameter mm	Horizontal run m	Vertical run m
22	1.8	2.4
28	1.8	2.4
35	2.4	3.0
42	2.4	3.0
54	2.7	3.0

Table B.2 — Maximum spacing of fixings for steel pipework

Nominal diameter mm	Horizontal run m	Vertical run m
15	1.8	2.4
20	2.4	3.0
25	2.4	3.0
32	2.7	3.0
40	3.0	3.6
50	3.0	3.6
80	3.6	4.5

Table B.3 — Maximum spacing of fixings for CPVC pipework

Nominal diameter mm	Horizontal run m	Vertical run m
12	0.6	1.2
15	0.8	1.6
22	0.8	1.6
28	0.9	1.8
32	1.0	2.0
40	1.05	2.1
50	1.2	2.4
65	1.35	2.7
80	1.5	3.0

Licensed copy:London Borough of Sutton , 13/06/2010, Uncontrolled Copy, © BSI

© BSI 31 January 2005

Bibliography

Standards publications

BS 1710:1984, *Specification for and identification of pipeline and services.*

BS 5306-2:1990, *Fire extinguishing installations and equipment on premises — Part 2: Specification for sprinkler systems.*

BS EN 12845:2003, *Fixed firefighting systems — Automatic sprinkler systems — Design, installation and maintenance.*

BS EN ISO 9001:2000, *Quality management systems — Requirements.*

Other documents

[1] GREAT BRITAIN. Water Supply (Water Quality) Regulations 2000. London: The Stationery Office.

[2] GREAT BRITAIN. Water Supply (Water Quality) (Scotland) Regulations 2001. Edinburgh: The Stationery Office.

[3] NORTHERN IRELAND. Water Supply (Water Quality) Regulations (Northern Ireland) 2002. Belfast: The Stationery Office.

[4] FIRE PROTECTION ASSOCIATION. *Guidelines for the supply of water to fire sprinkler systems*. Fire Protection Association.

[5] WATER RESEARCH CENTRE (WRc plc), *WRc Guides*. Marlow [Bucks]: WRc plc.

[6] GREAT BRITAIN. Building Regulations 2000. London: The Stationery Office.

[7] GREAT BRITAIN. Building Standards Scotland 1990. Edinburgh: The Stationery Office.

[8] NORTHERN IRELAND. Building Regulations (Northern Ireland) 2000. Belfast: The Stationery Office.

Further reading

BS 864-2:1983, *Capillary and compression tube fittings of copper and copper alloy — Part 2: Specification for capillary and compression fittings for copper tubes.*

BS EN 54 (all parts), *Fire detection and fire alarm systems.*

BS EN 1254 (all parts), *Copper and copper alloys — Plumbing fittings.*

LPC Technical Bulletin TB: 1997: 201 — Suitable sprinkler components and services. London: The Fire Protection Association, 2003.

NFPA 13, *Standard for the installation of sprinkler systems.* Quincy [MA]: National Fire Protection Association.

NFPA 13D, *Standard for the installation of sprinkler systems for one and two family dwellings and mobile homes*. Quincy [MA]: National Fire Protection Association.

NFPA 13R, *Standard for the installation of sprinkler systems in residential occupancies up to and including four stories in height*. Quincy [MA]: National Fire Protection Association.

SHARPE, C., ed. *Kempe's Engineers Year-Book*, Volumes 1 and 2. 97th Edition. Tonbridge [Kent]: Benn Business Information Services Limited. 1992.

THE LOSS PREVENTION CERTIFICATION BOARD, *List of Approved Fire and Security Products and Services — A specifier's guide*. Watford [Hertfordshire]: BRE Certification Limited.

UL 199, *Automatic sprinklers for fire-protection service*. Underwriters Laboratories Inc. 1997.

UL 1626, *Residential sprinklers for fire-protection service*. Underwriters Laboratories Inc. 1994.

Licensed copy:London Borough of Sutton , 13/06/2010, Uncontrolled Copy, © BSI

BSI — British Standards Institution

BSI is the independent national body responsible for preparing British Standards. It presents the UK view on standards in Europe and at the international level. It is incorporated by Royal Charter.

Revisions

British Standards are updated by amendment or revision. Users of British Standards should make sure that they possess the latest amendments or editions.

It is the constant aim of BSI to improve the quality of our products and services. We would be grateful if anyone finding an inaccuracy or ambiguity while using this British Standard would inform the Secretary of the technical committee responsible, the identity of which can be found on the inside front cover. Tel: +44 (0)20 8996 9000. Fax: +44 (0)20 8996 7400.

BSI offers members an individual updating service called PLUS which ensures that subscribers automatically receive the latest editions of standards.

Buying standards

Orders for all BSI, international and foreign standards publications should be addressed to Customer Services. Tel: +44 (0)20 8996 9001. Fax: +44 (0)20 8996 7001. Email: orders@bsi-global.com. Standards are also available from the BSI website at http://www.bsi-global.com.

In response to orders for international standards, it is BSI policy to supply the BSI implementation of those that have been published as British Standards, unless otherwise requested.

Information on standards

BSI provides a wide range of information on national, European and international standards through its Library and its Technical Help to Exporters Service. Various BSI electronic information services are also available which give details on all its products and services. Contact the Information Centre. Tel: +44 (0)20 8996 7111. Fax: +44 (0)20 8996 7048. Email: info@bsi-global.com.

Subscribing members of BSI are kept up to date with standards developments and receive substantial discounts on the purchase price of standards. For details of these and other benefits contact Membership Administration. Tel: +44 (0)20 8996 7002. Fax: +44 (0)20 8996 7001. Email: membership@bsi-global.com.

Information regarding online access to British Standards via British Standards Online can be found at http://www.bsi-global.com/bsonline.

Further information about BSI is available on the BSI website at http://www.bsi-global.com.

Copyright

Copyright subsists in all BSI publications. BSI also holds the copyright, in the UK, of the publications of the international standardization bodies. Except as permitted under the Copyright, Designs and Patents Act 1988 no extract may be reproduced, stored in a retrieval system or transmitted in any form or by any means – electronic, photocopying, recording or otherwise – without prior written permission from BSI.

This does not preclude the free use, in the course of implementing the standard, of necessary details such as symbols, and size, type or grade designations. If these details are to be used for any other purpose than implementation then the prior written permission of BSI must be obtained.

Details and advice can be obtained from the Copyright & Licensing Manager. Tel: +44 (0)20 8996 7070. Fax: +44 (0)20 8996 7553. Email: copyright@bsi-global.com.

BSI
389 Chiswick High Road
London
W4 4AL

Licensed copy:London Borough of Sutton , 13/06/2010, Uncontrolled Copy, © BSI