BRITISH STANDARD

BS 5839-1:2002

Fire detection and fire alarm systems for buildings —

Part 1: Code of practice for system design, installation, commissioning and maintenance

ICS 13.220.20; 13.320

NO COPYING WITHOUT BSI PERMISSION EXCEPT AS PERMITTED BY COPYRIGHT LAW

British Standards

Committees responsible for this British Standard

The preparation of this British Standard was entrusted by Technical Committee, FSH/12, Fire detection and alarm systems, to Subcommittee FSH/12/1, Installation and servicing, upon which the following bodies were represented:

Association of British Fire Trades
BRE Building Research Establishment
BRE/LPC Laboratories
British Cables Association
British Fire Consortium
British Fire Protection Systems Association
British Nuclear Fuels plc
BT plc
Chartered Institution of Building Services Engineers
Consumer Policy Committee BSI
Department of Health NHS Estates
Electrical Contractors Association
Energy Industries Council
Engineering Industries Association
Health and Safety Executive
Her Majesty's Fire Service Inspectorate
Institution of Fire Prevention Officers
Institution of Fire Safety
Institute of Petroleum
Institution of Electrical Engineers
Line of Fire
London Fire and Emergency Planning Authority
Maritime and Coastguard Agency
MOD — UK Defence Standardization
National Association of Fire Officers
National Caravan Council Limited
National Inspection Council for Electrical Installation Contracting
Nuclear Industry Fire Safety
Office of the Deputy Prime Minister — Building Regulations Division
Professional Lighting and Sound Association
Royal Society of Health
Trades Union Congress

This British Standard, having been prepared under the direction of the Health and Environment Policy and Strategy Committee, was published under the authority of the Standards Policy and Strategy Committee on 15 October 2002

© BSI 15 October 2002

First published as CP 327.404/402.501, September 1951

First revision, as CP 1019, May 1972

Second revision, as BS 5839-1, January 1980

Third revision May 1988

Fourth revision October 2002

The following BSI references relate to the work on this British Standard:

Committee reference FSH/12/1
Draft for comment 98/543138 DC

ISBN 0 580 40376 9

Amendments issued since publication

Amd. No.	Date	Comments

Contents

		Page
Committees responsible		Inside front cover
Foreword		iv
Section 1. General		1
1	Scope	1
2	Normative references	2
3	Terms and definitions	3
4	Need for a fire alarm system	9
5	Categories of system	10
6	Exchange of information and definition of responsibilities	12
7	Variations from the recommendations of this standard	14
Section 2. Design considerations		17
8	Relationship between system Category and areas protected	17
9	Actuation of other fire protection systems or safety facilities	19
10	Systems in explosive gas or dust atmospheres	20
11	System components	20
12	Monitoring, integrity and reliability of circuits external to control equipment	21
13	Detection zones	26
14	Alarm zones	28
15	Communication with the fire service	29
16	Audible alarm signals	32
17	Visual alarm signals	36
18	Fire alarm warnings for people with impaired hearing	36
19	Staged fire alarms	38
20	Manual call points	40
21	Types of fire detector and their selection	42
22	Spacing and siting of automatic fire detectors	48
23	Control and indicating equipment	61
24	Networked systems	63
25	Power supplies	65
26	Cables, wiring and other interconnections	68
27	Radio-linked systems	74
28	Electromagnetic compatibility	76
29	Electrical safety	78
Section 3. Limitation of false alarms		81
30	Responsibility for limitation of false alarms	81
31	Categories of false alarms	83
32	Acceptable rate of false alarms	83
33	Causes of false alarms	85
34	Design process for limitation of false alarms	86
35	Measures to limit false alarms	86
Section 4. Installation		93
36	Responsibility of installer	93
37	Installation practices and workmanship	94
38	Inspection and testing of wiring	95

© BSI 15 October 2002

	Page
Section 5. Commissioning and handover	97
39 Commissioning	97
40 Documentation	99
41 Certification	100
42 Acceptance	101
43 Verification	102
Section 6. Maintenance	105
44 Routine testing	105
45 Inspection and servicing	106
46 Non-routine attention	109
Section 7. Users responsibilities	113
47 Responsible person	113
48 Log book	114
Annex A (informative) Choice of appropriate category of fire detection and alarm system	115
Annex B (informative) Typical noise levels in buildings	116
Annex C (normative) Control and transmission equipment for tactile alarm devices provided for people with impaired hearing systems	118
Annex D (normative) Method for calculating standby battery capacity	119
Annex E (informative) Schematic for design against false alarms	120
Annex F (informative) Model format for system log book	121
Annex G (informative) Model certificates	123
Bibliography	131
Figure 1a) — Radial sounder circuits [see **12.2.2**j)]	25
Figure 1b) — Ring sounder circuits [e.g. addressable loops [see **12.2.2**j)]	25
Figure 2 — Examples of search distances in an open area [see **13.2.3**b)]	27
Figure 3 — Alarm zones [see **14.2**d)]	29
Figure 4 — Sound pressure levels [see **16.2.1**a)]	33
Figure 5 — Manual call points on escape routes [see **20.2**c)]	42
Figure 6 — Smoke detectors in pitched roofs [see **22.3**c)]	51
Figure 7 — Detectors in top 10 % of a void [see **22.3**f)]	52
Figure 8 — Proximity of detectors to ceiling fittings [see **22.3**h)]	52
Figure 9 — Partitions or storage on racks	53
Figure 10a) — Ceiling obstructions treated as walls [see **22.3**j)]	53
Figure 10b) — Horizontal ceiling comprising a series of small cells [see **22.3**k)]	54
Figure 10c) — Cells formed from joists [see **22.3**j) and **22.3**k)]	54
Figure 11 — Detector on perforated ceiling [see **22.3**m)]	55
Figure 12 — Clear space around a detector [see **22.3**n)]	56
Figure 13 — Sitting optical beam detectors	58
Figure 14a) — Example of a networked fire alarm system in a multi-storey building, showing standard cable grade for local wiring and enhanced grade for network cable [see **26.2**c)]	72
Figure 14b) — Example of a networked fire alarm system in a multi-storey building, showing standard cable grade throughout provided that there is diverse routing of the network cable loop (see **24.2**)	73
Figure 14c) — Use of enhanced fire resisting cable in certain large sites [see **26.2**c)]	74

© BSI 15 October 2002

Page

Figure 15a) — Example of system loop wiring 79

Figure 15b) — Example of network conditions 79

Figure 16 — Appropriate marking for the transformer, the power supply housing or the internal power sub-assembly enclosure to denote the use of a safety isolating transformer 80

Table 1 — Spacing and siting of detectors on honeycomb and similar ceilings 57

Table 2 — Spacing and siting of detectors on ceilings with closely spaced structural beams or joists 57

Table 3 — Limits of ceiling height (general) 60

Table 4 — Limits of ceiling height (Category P systems and five minute fire service attendance) 60

Table 5 — Considerations when using and selecting point and optical beam smoke detectors 88

Table A.1 — Choice of appropriate category of a fire detection and alarm system 115

Table B.1 — Typical occupational noise levels (L_p) 117

Foreword

This part of BS 5839 has been prepared by Technical Committee FSH/12/1. It supersedes BS 5839-1:1988, which will be withdrawn on 15 July 2003. Projects designed to BS 5839-1:1988 may, by agreement between contractual parties, be completed to that edition.

This new edition of BS 5839-1 takes into account changes in technology, custom and practice since the publication of BS 5839-1:1988 and introduces some significant changes.

The principal changes made within the revision are as follows:

a) the term "Category" (of system) is now used instead of "type" in the description of system objective/area of coverage (e.g. a full property protection system was previously described as type P1, but is now described as Category P1); this is to distinguish this term from the less precise use of the term "type" to describe the principles of operation of the system (e.g. conventional, addressable, heat or smoke, etc.);

b) the Categories (previously "types") of system defined in this code of practice have been extended in number to give recognition to systems that are designed to satisfy specific fire safety objectives or enhance life safety, but that cannot be classified within the system types previously defined;

c) the need for the level of protection to be based on a fire risk assessment by a competent person is recognized;

d) the use of automatic fire detection as part of a fire engineering solution is recognized;

e) the use of new technologies, such as multi-sensor detection, is addressed;

f) new methods of fire detection, including carbon monoxide detection and video smoke detection, are taken into account;

g) the maximum distance of travel to a manual call point has been increased;

h) greater flexibility is recommended in respect of minimum sound pressure levels;

i) a new section, devoted to the limitation of false alarms by appropriate system design, system management and improved technology has been added;

j) the distinction between different categories of false alarms, particularly those that result from environmental influences or fire-like phenomena, and those that result from equipment faults, is recognized;

k) two different levels of resistance of cables to damage during the course of a fire are recognized, and recommendations for application of each type are provided;

l) the use of fire resisting cables is now recommended for all manual call point and automatic fire detector circuits. The use of fire resisting cables is also recommended for all mains power supply circuits;

m) recommendations for networked systems, particularly in respect of cable types, are included;

n) recommendations for fire warning systems for people with impaired hearing have been included;

o) the code of practice has been simplified by the use of practice specification format, in which commentary on relevant principles is followed by short, succinct recommendations, and by the addition of diagrams. This is intended to make the code of practice less ambiguous, simpler for the non-specialist to apply and compliance of installations more straightforward to audit;

p) recommendations for servicing and maintenance of systems, including the periods at which routine servicing should be carried out, have been revised;

q) a new informative annex has been added to give advice on the Categories of system typically installed in a variety of occupancies;

© BSI 15 October 2002

r) separate recommendations are no longer provided for control and indicating equipment and power supplies for small manual systems; such systems should comply with all recommendations of the code of practice;

s) the term “deviation” has been replaced with the term “variation”, to avoid any negative connotation associated with the term used to describe an aspect of system design that, for sound reasons, does not comply with the recommendations of this standard;

t) the single certificate of commissioning has been replaced with separate certificates of design, installation, commissioning, acceptance and verification.

In England, Wales and Northern Ireland, requirements for effective means of giving warning in case of fire are incorporated within building regulations. (In Scotland, the equivalent building regulations only impose this requirement on dwellings and shopping centres.) These regulations apply to new buildings and extensions or material alterations to existing buildings.

In England, Scotland and Wales, the Fire Precautions (Workplace) Regulations 1997 (as amended) require that, where necessary to safeguard employees in case of fire, workplaces are equipped with appropriate fire detection and alarms; in premises that require a fire certificate under the Fire Precautions Act 1971, this Act also requires that the premises are provided with adequate means of giving warning in case of fire. Equivalent legislation applies in Northern Ireland.

Various other legislation, including licensing legislation, local Acts, housing legislation (which applies to houses in multiple occupation) and other legislation that applies to specific occupancies might also make requirements for fire detection and alarm systems.

Although this standard makes recommendations for the provision of fire detection and alarm systems in a wide variety of premises, reference to particular types of premises in Annex A does not necessarily mean that all such premises will be required by law to have such systems installed. In certain small premises, word of mouth or mechanical devices, such as rotary gongs, may constitute an adequate means of giving warning to occupants in the event of fire. The need for a fire detection and alarm system, and the nature of the system, will often be determined by a fire risk assessment carried out by a competent person.

The fire authority will advise on the fire legislation that applies to any building. If a fire detection and alarm system is to be installed, or modified, to satisfy the requirements of legislation, early consultation with the authority or authorities responsible for enforcement of the legislation is advisable.

The protection of property with a fire detection and alarm system could result in an insurance company being prepared to offer a reduced premium, provided that the system is acceptable. Early consultation with the insurer is thus advisable.

Fire protection should not be confused with fire prevention or other fire precautions, and the provision of a fire detection and alarm system should never be regarded as giving complete protection against fire. A fire detection and alarm system is, however, likely to form an important component in defence against fire, and can form part of a fire engineering solution. For detailed recommendations on fire precautions in buildings, including the likely need for fire detection and alarm systems, detailed advice is given in BS 5588. For advice on fire engineering solutions, reference can be made to BS 7974 and PD 7974-4.

It has been assumed in the drafting of this standard that the execution of its provisions will be entrusted to appropriately qualified and competent people.

© BSI 15 October 2002

As a code of practice, this British Standard takes the form of guidance and recommendations. It may be used as a basis for a specification, and particular care should be taken to ensure that claims of compliance are not misleading.

Clauses are arranged into two parts, namely commentary and recommendations. It is envisaged that, when fire detection and alarm systems are audited (e.g. by enforcing authorities, insurers, third party certification bodies, or representatives of the purchaser or user), only the recommendations will form the basis for the audit, while the commentary is intended to provide an explanatory background to the recommendations, especially if the recommendations might appear to be arbitrary.

This publication does not purport to include all the necessary provisions of a contract. Users are responsible for its correct application.

Compliance with a British Standard does not of itself confer immunity from legal obligations.

Summary of pages

This document comprises a front cover, an inside front cover, pages i to vi, pages 1 to 131 and a back cover.

The BSI copyright notice displayed in this document indicates when the document was last issued.

© BSI 15 October 2002

Section 1. General

1 Scope

This part of BS 5839 provides recommendations for the planning, design, installation, commissioning and maintenance of fire detection and fire alarm systems in and around buildings, other than dwellings. It does not recommend whether or not a fire alarm system should be installed in any given premises. Recommendations for fire detection and alarm systems in dwellings are given in BS 5839-6.

The term fire detection and alarm systems, in the context of this part of BS 5839, includes systems that range from those comprising only one or two manual call points and sounders to complex networked systems that incorporate a large number of automatic fire detectors, manual call points and sounders, connected to numerous inter-communicating control and indicating panels.

The term also includes systems that are capable of providing signals to initiate the operation of other fire protection systems and equipment (such as fire extinguishing systems, smoke control systems or automatic door release equipment) or safety measures (such as shut down of air handling systems, closing of oil or gas valves, or grounding of lifts). It does not apply to the other systems and equipment themselves, or the ancillary circuits to interface with them. Recommendations for the planning, installation and servicing of facilities for operation of certain fire protection systems by the systems addressed within this part of BS 5839 are given in BS 7273.

This part of BS 5839 does not cover systems whose primary function is to extinguish or control fire, such as sprinkler or automatic extinguishing systems, even though they might have a secondary alarm function; it does, however, cover the use of a signal from an automatic extinguishing system as one initiating element of a fire alarm system (e.g. by use of a pressure or flow switch).

This part of BS 5839 does not cover voice alarm systems. Recommendations for voice alarm systems are given in BS 5839-8.

This part of BS 5839 does not cover systems combining fire alarm functions with other non-fire related functions. Recommendations for such integrated systems are given in BS 7807.

This part of BS 5839 does not cover the 999 (or 112) public emergency call system, or manually or mechanically operated sounders.

This part of BS 5839 does not cover audible or visual way-guidance systems which are designed to complement fire alarm systems.

Recommendations for fire detection and alarm systems in electronic data processing installations and similar critical electronic equipment rooms are given in BS 6266, which provides recommendations over and above those given in this part of BS 5839.

Recommendations for fire detection and alarm systems in hospitals are given in the NHS Estates publication HTM 82.

This part of BS 5839 applies to extensions and alterations to existing systems, at least in respect of the design, installation, commissioning and certification of the new work, albeit that the extended or altered system might not, overall, comply with the recommendations of this standard.

© BSI 15 October 2002

2 Normative references

The following referenced documents are indispensable for the application of this document. For dated references, only the reference cited applies. For undated references, the latest edition of the referenced document (including any amendments) applies.

BS 476 (relevant parts), *Fire tests on building materials and structures.*

BS 4678-4, *Cable trunking — Part 4: Specification for cable trunking made of insulating material.*

BS 5588 (relevant part), *Fire precautions in the design, construction and use of buildings.*

BS 5839-8:1998, *Fire detection and alarm systems for buildings — Part 8: Code of practice for the design, installation and servicing of voice alarm systems.*

BS 5839-9, *Fire detection and alarm systems for buildings — Part 9: Code of practice for design, installation and maintenance of emergency voice communication systems.*

BS 5979:2000, *Code of practice for remote centres receiving signals from security systems.*

BS 7273 (all parts), *Code of practice for the operation of fire protection measures.*

BS 7629 (all parts), *Specification for 300/500 V fire resistant electric cables having low emission of smoke and corrosive gases when affected by fire.*

BS 7671, *Requirements for electrical installations — IEE Wiring Regulations.*

BS 7846, *Electric cables — 600/1 000 V armoured fire-resistant cables having thermosetting insulation and low emission of smoke and corrosive gases when affected by fire.*

BS EN 54-2, *Fire detection and fire alarm systems — Part 2: Control and indicating equipment.*

BS EN 54-3, *Fire detection and fire alarm systems — Part 3: Fire alarm devices — Sounders.*

BS EN 54-4, *Fire detection and fire alarm systems — Part 4: Power supply equipment.*

BS EN 54-5, *Fire detection and fire alarm systems — Part 5: Heat detectors — Point detectors.*

BS EN 54-7, *Fire detection and fire alarm systems — Part 7: Smoke detectors — Point detectors using scattered light, transmitted light or ionization.*

BS EN 54-10, *Fire detection and fire alarm systems — Part 10: Flame detectors.*

BS EN 54-11, *Fire detection and fire alarm systems — Part 11: Manual call points.*

BS EN 54-12, *Fire detection and fire alarm systems — Part 12: Smoke detectors — Optical beam detectors.*

BS EN 50086 (relevant parts), *Specification for conduit systems for electrical installations.*

BS EN 50200, *Method of test for resistance to fire of unprotected small cables for use in emergency circuits.*

BS EN 50281-1-2, *Electrical apparatus for use in the presence of combustible dust — Part 1-2: Selection, installation and maintenance.*

BS EN 60079-14, *Electrical apparatus for explosive gas atmospheres — Part 14: Electrical installations in hazardous areas (other than mines).*

BS EN 60702-1, IEC 60702-1, *Mineral insulated cables and their terminations with a rated voltage not exceeding 750 V — Part 1: Cables.*

BS EN 60702-2, IEC 60702-2, *Mineral insulated cables and their terminations with a rated voltage not exceeding 750 V — Part 2: Terminations.*

BS EN 61558 (parts relevant to safety isolating transformers), *Safety of power transformers, power supply units and similar.*

BS EN ISO 13943, *Fire safety — Vocabulary.*

Code of practice for Category 1 aspirating detection systems. British Fire Protection Systems Association, 1996.

LPS 1257, *Test specification for transmission link integrity — Radio-linked fire detection and alarm equipment*. Loss Prevention Certification Board, 2001.

Health Technical Memorandum 82, *Alarm and detection systems*. NHS Estates. London: TSO (The Stationery Office).

 © BSI 15 October 2002

3 Terms and definitions

For the purpose of this part of BS 5839, the terms and definitions in BS EN ISO 13943 and the following apply.

3.1
addressable system
system in which signals from detectors, manual call points, or any other devices are individually identified at the control and indicating equipment

3.2
alarm receiving centre
ARC
continuously manned premises, remote from those in which the fire alarm system is fitted, where the information concerning the state of the fire alarm system is displayed and/or recorded, so that the fire service can be summoned

NOTE 1 In the previous edition of this standard, alarm receiving centres were called remote manned centres.

NOTE 2 The term "central station" is sometimes used as a synonym for alarm receiving centre.

NOTE 3 The term "alarm receiving centre" is often replaced by the acronym ARC.

3.3
alarm zone
geographical sub-division of the protected premises, in which the fire alarm warning can be given separately, and independently, of a fire alarm warning in any other alarm zone

3.4
aspirating smoke detection system
automatic fire detection system in which a sample of the atmosphere in the protected space is drawn by a fan or pump into a fire detector which may be remote from the protected space

3.5
audibility
property of a sound which allows it to be heard among other sounds

NOTE Audibility depends upon the relative loudness and frequency content of the sound in comparison with other sounds which are present at the same time.

3.6
automatic fire detection and fire alarm system
system (other than a single self-contained smoke or fire alarm) in which an alarm of fire can be initiated automatically

NOTE 1 Automatic fire detection and fire alarm systems may be classified as follows:

a) **two-state fire detection systems** fire detection and alarm systems that are capable of indicating only two output states, namely the "normal" or "fire" conditions.

b) **analogue fire detection systems** automatic fire detection and alarm systems in which a signal representing the value of the sensed phenomenon is processed (whether within the detector or at the control and indicating equipment) with a view to enabling more than two output states to be given, representing normal, fire and at least one other abnormal condition. The processing may take the form of application of fixed thresholds to the value of the sensed phenomenon, or more complex analysis of the various parameters of the signal, such as measurement of rate of rise, shape of curve, or area under the curve. The purpose of the analysis is normally identification (but not necessarily display to the user) of conditions that are not representative of fire, but that can result in a false alarm from a two-state fire detection system. In most analogue fire detection systems, the value of the sensed phenomenon may also be made available to an authorized person, such as a service technician.

NOTE 2 There are systems with more than two-states and these are referred to as multi-state systems.

3.7
circuit
assembly of fire alarm components supplied from the same control equipment and protected against overcurrent by the same protective device(s) or current limitation arrangements

3.8
circulation area
area (including a stairway) used mainly as a means of access between a room and an exit from the building or compartment

3.9
combustion gas detector
automatic fire detector sensitive to gaseous products of combustion and/or thermal decomposition

3.10
commissioning
process by which it is determined that the installed system meets the defined requirements

3.11
competent person
person with the necessary training and experience, and with access to the requisite tools, equipment and information, and capable of carrying out a defined task

3.12
control and indicating equipment
CIE
component or components of a fire detection and alarm system through which other components may be supplied with power and which:

a) are used:

1) to receive signals from the connected detectors, manual call points, or any other devices (e.g. input/output units);

2) to determine whether these signals correspond to a fire alarm condition;

3) to indicate any such fire alarm condition audibly and visually;

4) to indicate the location of the danger;

5) possibly to record any of this information;

b) are used to monitor the correct functioning of the system and give audible and visible warning of any faults (e.g. short circuit, open circuit, or fault in the power supply);

c) if required, are able to pass on the fire alarms signal:

— to audible or visible fire alarm devices;

— through suitable transmission equipment to an alarm receiving centre;

— through further control equipment to an automatic fire extinguishing system.

3.13
critical signal path
all components and interconnections between every fire alarm initiation point (manual call point or automatic fire detector) and the input terminals on, or within, each fire alarm device

3.14
designer
person or organization taking responsibility for the work outlined in Section 2

3.15
detection zone
subdivision of the protected premises such that the occurrence of a fire within it will be indicated by a fire alarm system separately from an indication of fire in any other subdivision

NOTE A detection zone will usually consist of an area protected by several manual call points and/or detectors, and is separately indicated to assist in location of the fire, evacuation of the building and fire-fighting.

 © BSI 15 October 2002

3.16
detector
part of an automatic fire detection system that contains at least one sensor which constantly, or at frequent intervals, monitors at least one suitable physical and/or chemical phenomenon associated with fire, and that provides at least one corresponding signal to the control and indicating equipment

NOTE The decision to give the alarm of fire or to operate automatic fire protection equipment may be made at the detector or another part of the system, for example at the control and indicating equipment.

3.17
false alarm
fire signal resulting from a cause(s) other than fire

NOTE False alarms may be sub-divided into four categories:

a) unwanted alarms, in which a system has responded, either as designed or as the technology may reasonably be expected to respond, to any of the following:

— a fire-like phenomenon or environmental influence (e.g. smoke from a nearby bonfire, dust or insects, processes that produce smoke or flame, or environmental effects that can render certain types of detector unstable, such as rapid air flow);

— accidental damage;

— inappropriate human action (e.g. operation of a system for test or maintenance purposes without prior warning to building occupants and/or an alarm receiving centre);

b) equipment false alarms, in which the false alarm has resulted from a fault in the system;

c) malicious false alarms, in which a person operates a manual call point or causes a fire detector to initiate a fire signal, whilst knowing that there is no fire;

d) false alarms with good intent, in which a person operates a manual call point or otherwise initiates a fire signal in the belief that there is a fire, when no fire actually exists.

3.18
fire alarm device
component of a fire alarm system, not incorporated in the control and indicating equipment, which is used to give a warning of fire

NOTE For example, a sounder or visual indicator.

3.19
fire alarm sounder
audible fire alarm device

3.20
fire engineering solution
application of science and engineering to the achievement of one or more fire safety objectives in such a way that the objectives are achieved without following, in full, prescriptive recommendations of a recognized code of practice

3.21
fire hazard level
likelihood of fire occurring

3.22
fire-resisting construction
construction that is able to satisfy for a stated period of time some or all of the appropriate criteria given in the relevant parts of BS 476

3.23
fire risk
combination of the probability of fire occurring and the magnitude of the consequences of fire

3.24
fire signal
signal intended to indicate the occurrence of a fire

© BSI 15 October 2002

3.25
flame detector
automatic fire detector which responds to the radiation emitted by the flames from a fire

3.26
heat detector
automatic fire detector which responds to an increase in temperature

3.27
installation
work of fixing and interconnecting the components and elements of a system

NOTE Installation may be carried out by one or more parties.

3.28
installer
person or organization having responsibility for all or part of the process of installation

3.29
lantern-light
construction standing above the surface of a roof and intended to admit light to the space below

3.30
line detector
detector which responds to the phenomenon sensed in the vicinity of a continuous line

3.31
low fire risk area or room
area or room containing little or no combustible material and no ignition sources, in which any foreseeable fire is unlikely to spread such as to present any significant threat to escape by occupants or damage to property

NOTE Examples of combustible materials are furniture, fittings, storage or linings.

3.32
maintenance
work of inspection, servicing and repair necessary in order to maintain the efficient operation of the installed system

3.33
manual call point
component of a fire detection and alarm system which is used for the manual initiation of an alarm

3.34
manual system
system containing no automatic detectors and in which an alarm of fire can only be initiated manually

3.35
maximum alarm load
maximum load imposed on a fire alarm system power supply under fire conditions, comprising the power required for simultaneous operation of all fire alarm devices, fire signals from all automatic fire detectors and manual call points in the building, any power drawn by other systems and equipment in the alarm condition and any power required for transmission of fire signals to an alarm receiving centre (if a facility for this is provided)

3.36
mimic diagram
topographic representation of the protected premises and their subdivisions, carrying indicating devices for each subdivision such that the indications of the fire alarm system can be rapidly related to the layout of the premises

 © BSI 15 October 2002

3.37
minimum static response temperature
minimum temperature at which a heat detector would produce a fire alarm signal if subjected to a very small rate of rise of temperature

3.38
multi-sensor fire detector
fire detector that monitors more than one physical and/or chemical phenomenon associated with fire

3.39
networked system
fire detection and alarm system in which several control and indicating equipments are interconnected and able to exchange information

3.40
normal supply
supply from which the fire alarm system is expected to obtain its power under normal conditions

NOTE The normal supply is usually derived from the public electricity supply system.

3.41
phased evacuation
system of evacuation in which different parts of the premises are evacuated in a controlled sequence of phases, those parts of the premises expected to be at greatest risk being evacuated first

NOTE A phased evacuation will normally require at least a two-stage alarm system.

3.42
point detector
detector which responds to a phenomenon sensed in the vicinity of a fixed point

3.43
pre-alarm warning
early warning of conditions which might (or might not) represent a fire

3.44
protection
presence of one or more automatic fire detector(s) able to initiate actions needed for the safety of life or property in the event of a fire

3.45
purchaser
person or organization taking primary responsibility for acceptance of and payment for the installed system

3.46
radio-linked system
fire alarm system in which some or all of the interconnections between components are made by radio-links

3.47
rate of rise detector
automatic fire detector which initiates an alarm when the rate of change of the measured phenomenon with time exceeds a certain value, for a sufficient time

NOTE For each class in BS EN 54-5, there are two subclasses: R and S. So-called rate of rise detectors may be taken to correspond to R, and fixed temperature detectors to S.

3.48
repair
non-routine work necessary to restore the efficient operation of the installed system

3.49
responsible person
person having control of the building and/or premises, whether as occupier or otherwise, or any person delegated by the person having control of the building and/or premises to be responsible for the fire alarm system and the fire procedures

NOTE The responsible person, in this context, might, or might not, be the person responsible under fire safety legislation for compliance with legislation.

3.50
search distance
distance which has to be travelled by a searcher within a zone in order to determine visually the position of a fire

NOTE The distance is not measured between the point of entry of the zone and the location of the fire, but only between the point of entry and the location at which a person searching for the fire would first become aware of the location of the fire.

3.51
sector
subdivision of the protected premises normally containing several zones

NOTE A sector may cover more than one building.

3.52
servicing
routine process of work on the system (including cleaning, re-alignment, adjustment and replacement) carried out at pre-determined intervals

3.53
short circuit isolators
device, which may be connected into a transmission path of a fire detection and fire alarm system, to limit the consequences of low parallel resistance faults between the lines of this transmission path

NOTE A short circuit isolating device may be a physically separate device or it may be incorporated into another device (e.g. integrated into a smoke detector or detector base).

3.54
smoke
particulate and aerosol products of combustion generated by a fire, whether this be of the smouldering or open flame type

NOTE In general, the particle diameters range from 1 nm (invisible smoke) to 10 μm (visible smoke).

3.55
smoke detector
automatic fire detector sensitive to particulate products of combustion and/or pyrolysis suspended in the atmosphere (aerosols)

3.56
soak period
period after a fire alarm system has been commissioned, but prior to handover, during which the system's performance in relation to false alarms and faults is monitored

3.57
staff alarm
restricted alarm, following the operation of a manual call point or automatic fire detector, given to certain staff in the premises to permit investigation prior to evacuation

NOTE The use of staff alarms in response to signals from manual call points is not generally acceptable (see **19.2.2**).

 © BSI 15 October 2002

3.58
staged fire alarm system
fire alarm system in which two or more stages of alarm can be given within a given area

NOTE 1 Examples of staged alarm systems are a two-stage system capable of giving "alert" or "evacuate" signals, or a three-stage alarm system capable of giving "staff alarm", "alert" or "evacuate" signals.

NOTE 2 The normal condition, under which no alarm is given, is not counted as a stage of alarm.

NOTE 3 In this standard, in order to avoid confusion:

a) the term "stage" is used to describe the different stages of alarm in part, or all, of the premises;

b) the term "phase" is used in describing the sequence of phases of evacuation from different areas of the premises.

3.59
standby supply
electricity supply, commonly from a rechargeable battery, which is automatically connected to the fire alarm system when the normal supply fails

3.60
time-related system
system in which the response or sensitivity of automatic fire detectors is changed with the time of day

3.61
user
person or organization having control of the building (or part of the building) in which the fire detection and alarm system is installed

3.62
voice alarm system
sound distribution system that provides means for automatically broadcasting speech messages and warning signals

NOTE Voice alarm systems normally include a facility for transmission of live voice messages as well as automatically generated messages.

3.63
voice sounder
fire alarm sounder that contains the components necessary to generate and broadcast digitally recorded speech messages

4 Need for a fire alarm system

4.1 Commentary

The need for a fire alarm system in any specific building will normally be determined by the authority responsible for enforcing fire safety legislation in that building and/or by a fire risk assessment carried out by the owner, landlord, occupier(s) or employer(s), as appropriate. In general, it is appropriate to install some form of fire alarm system in virtually all buildings, other than very small premises that are relatively open-planned so that any fire will be quickly detected by occupants, who will be able to warn others by word of mouth or simple mechanical devices such as hand-operated bells.

Manual fire alarm systems are often sufficient to satisfy legislation in workplaces in which no one sleeps. Automatic fire detection is usually required by legislation to supplement the manual system in premises in which people sleep. Automatic fire detection might also be necessary to satisfy legislation under the following circumstances:

a) where the automatic fire detection forms part of a fire engineering solution;

b) where fire protection systems, such as door closing facilities or smoke control systems, are to be operated automatically in the event of fire;

c) where the low level of occupancy of a building, or part of a building, is such as to create the potential for fire to prejudice means of escape by occupants before they are aware of the fire.

Automatic fire detection is also commonly used to protect property by ensuring the early attendance of the fire service, as a result of the summoning of the brigade by occupants of the building or by transmission of fire alarm signals to an alarm receiving centre from where the fire service will be summoned. Automatic fire detection systems might, therefore, be required or recommended by the property insurers.

The early detection of fire by automatic means, and rapid summoning of the fire service, is also important in premises in which people cannot readily be evacuated immediately in the event of fire (e.g. hospitals).

4.2 Recommendations

The following recommendations are applicable.

a) Where there is uncertainty regarding the need for a fire alarm system, or the Category of system that should be used (see Clause **5**) reference should be made, by the developer, potential purchaser or user, to one or more of the following:

1) relevant part of BS 5588;

2) guidance documents that support fire safety legislation;

3) any authority responsible for enforcing fire safety legislation that applies to the premises;

4) the property insurer;

5) any relevant fire risk assessment.

b) The purchaser or user should ensure that the designer of a fire detection and alarm system is adequately appraised of the objectives of the system and any relevant requirements of enforcing authorities and insurers.

5 Categories of system

5.1 Commentary

5.1.1 *Introduction*

Fire alarm systems may be installed in buildings to satisfy one, or both, of two principal objectives, namely protection of life and protection of property. The objectives may differ in time or place. Other possible objectives exist, such as protection against business interruption and protection of the environment; these are likely to be satisfied by the recommendations in this standard for protection of property.

*Because of the great variety of applications for systems covered by this part of BS 5839, systems are divided into a number of different Categories, as described in **5.1.2**, **5.1.3** and **5.1.4**.*

5.1.2 *Category M Systems*

Category M systems are manual systems and, therefore, incorporate no automatic fire detectors.

5.1.3 *Category L Systems*

Category L systems are automatic fire detection systems intended for the protection of life. They are further subdivided into:

a) Category L1: systems installed throughout all areas of the building.

The objective of a Category L1 system is to offer the earliest possible warning of fire, so as to achieve the longest available time for escape;

b) Category L2: systems installed only in defined parts of the building.

A Category L2 system should include the coverage necessary to satisfy the recommendations of this standard for a Category L3 system; the objective of a Category L2 system is identical to that of a Category L3 system, with the additional objective of affording early warning of fire in specified areas of high fire hazard level and/or high fire risk;

c) Category L3: systems designed to give a warning of fire at an early enough stage to enable all occupants, other than possibly those in the room of fire origin, to escape safely, before the escape routes are impassable owing to the presence of fire, smoke or toxic gases;

*NOTE To achieve the above objective it will normally be necessary to install detectors in rooms which open onto an escape route (see **8.2**).*

 © BSI 15 October 2002

d) Category L4: systems installed within those parts of the escape routes comprising circulation areas and circulation spaces, such as corridors and stairways.

The objective of a Category L4 system is to enhance the safety of occupants by providing warning of smoke within escape routes;

NOTE The installation of detectors in additional areas is not precluded, and the system could then still be regarded as a Category L4 system.

e) Category L5: systems in which the protected area(s) and/or the location of detectors is designed to satisfy a specific fire safety objective (other than that of a Category L1, L2, L3 or L4 system).

Often the design is based on a fire risk assessment or forms part of a fire engineering solution. Protection may be provided to compensate for some departure from normal guidance elsewhere or as a part of the operating system for a fire protection system. Such a system could be as simple as one that incorporates a single automatic fire detector in one room (in which outbreak of fire would create undue risk to occupants, either in the room or elsewhere in the building), but the system could comprise comprehensive detection throughout large areas of a building in which, for example, structural fire resistance is less than that normally specified for buildings of that type;

NOTE The protection afforded by a Category L5 system might, or might not, incorporate that provided by a Category L2, L3 or L4 system.

5.1.4 *Category P systems*

Category P systems are automatic fire detection systems intended for the protection of property. They are further subdivided into:

a) Category P1: systems installed throughout all areas of the building.

The objective of a Category P1 system is to offer the earliest possible warning of fire so as to minimize the time between ignition and the arrival of fire-fighters;

b) Category P2: systems installed only in defined parts of the building.

The objective of a Category P2 system is to provide early warning of fire in areas of high fire hazard level, or areas in which the risk to property or business continuity from fire is high.

NOTE The defined parts of the building may be as few as one or more rooms, or as extensive as, for example, complete floors of the building.

5.1.5 *Selection of category*

Even in buildings with comprehensive fire detection, the provision of manual call points will still normally be of great value; people in the vicinity of a fire will normally be aware of the fire, and able to raise the alarm by use of a manual call point, before it is detected automatically.

If a system is intended to fulfil the objectives of more than one Category of system, then the system needs to comply with the recommendations for each of the Categories. For example, a system whose sole purpose is to provide property protection throughout the building (a Category P1 system) might not need to give an alarm signal of sufficient audibility to rouse all occupants who might sleep in the building. If, however, the system were also installed for the purpose of life safety (a Category L system), sufficient fire alarm sounders to rouse sleeping occupants would be necessary.

This part of BS 5839 does not recommend which Category of system needs to be installed in any given premises. The various system Categories need to be regarded as a "menu", from which purchasers, users, specifiers, enforcing authorities, insurers or system designers may select a suitable system for any building. However, an informative annex (Annex A) provides information on the Categories of systems that are typically installed in various types of premises.

Because of the wide range of systems covered by the recommendations of this part of BS 5839, the specification of requirements for a system, by a purchaser, user, enforcing authority or insurer, or the description of a system by a designer or installer, by reference to this standard, without a reference to system Category, will have little meaning.

The Category of system to be installed always needs to be included in the specification. Similarly, the specification of any Category of system, other than Category L1 or P1, always needs to include details of those areas of the building that are to be protected.

*In some cases, there will be little distinction between, for example, a Category P1 system with variations (see Clause **7**) and a Category P2 system. In such cases, either description could be used; the designated system Category needs to be regarded as a shorthand form of description, rather than a rigid form of prescription. Where a choice exists, however, the description needs to be based on the specified objective of the system.*

5.2 Recommendations

The following recommendations are applicable.

a) Any statutory requirements imposed by enforcing authorities, and any requirements imposed by property insurers, for a fire alarm system should clearly state the Category of system required.

b) The purchaser of the system or his agent should inform the designer of the system as to the Category of system that is required (e.g. in purchase or tender specifications).

c) If the designer is not informed as to the Category of system required, the designer should make clear, to the purchaser or his agent, the Category of system that is proposed, prior to an order for the system being placed.

d) In each of the situations described in a), b) and c), the description of the system should be further amplified by adequate information on the areas of the building that are to be protected, except in the case of a Category L1 or P1 system, for which such further information might not be necessary.

e) Category L1, L2, L3 and L4 systems should also satisfy the recommendations of this standard for a Category M system.

f) Where the recommendations of this standard for a Category M system are to be satisfied in conjunction with the recommendations for a Category P1, P2 or L5 system, the combined system should be described as a Category P1/M, P2/M or L5/M system respectively.

g) Where the objectives of more than one type of system are to be satisfied, the system should be described as a Category X/Y system (e.g. L2/P2 or L3/P2, etc.).

h) The system design certificate (see Clause **41**) should clearly state the Category of system that has been designed and should, except in the case of a Category M, L1 or P1 system, provide a brief description of the areas of the building that are protected by automatic fire detection.

6 Exchange of information and definition of responsibilities

6.1 Commentary

*The purpose of a fire alarm system is to support the fire safety strategy for the building. It is, in particular, important that system design suitably supports the required fire evacuation procedures, rather than those procedures being designed around a pre-determined system design. To a large extent, the design of the fire alarm system will depend on the actions required after the alarm has been given. Particular care is necessary in the case of a system that is to be capable of giving a two (or more) stage alarm (see Clause **19**).*

If a building contains alarm systems associated with hazards other than fire, the various hazard alarms need to be properly co-ordinated and be distinct from each other. In these buildings, the relative priorities need to be carefully assessed, and the system arranged so that a higher priority alarm cannot be prevented or obscured by one of a lower priority. Although, in general, fire will have the highest priority, there are buildings in which other hazards can have higher priorities than fire.

The system requirements, including those imposed by the evacuation procedures, the configuration of the building, and the use to which the building is put, need to be ascertained as accurately as possible by consultation between the user or purchaser and other interested parties, such as the enforcing authority or fire insurer.

It is advisable that there also be relevant consultation between the user or purchaser and the system designer. In a small, simple building, the extent to which such consultation is necessary may be minimal; the user or purchaser might have little knowledge of fire safety principles, and system design can involve little more than determination of the appropriate locations of manual call points and fire alarm devices. In complex premises, there will be a need for extensive consultation between the user or purchaser, the enforcing authority, the system designer and, possibly, specialist consultants.

 © BSI 15 October 2002

The design may be undertaken by the supplier, the installer, representatives of the user or purchaser (including consultants), or by any combination of these parties. It is desirable that, at the contract stage, a single organization takes responsibility for the design of the system, a single organization takes responsibility for the installation work, including compliance with the design, and a single organization takes responsibility for commissioning of the system. Any two, or all three, of these parties may take the form of one single organization. The responsibility for each of these three stages needs to be clearly defined and documented.

It is essential that, at the design stage, avoidance of the potential for false alarms is considered as well as the effectiveness of the system to give a warning in the event of fire (see Section 3).

6.2 Recommendations

The following recommendations are applicable.

a) The user or purchaser of the system (or an appointed representative of these parties, such as a consultant) should ensure that, to the extent appropriate, there is consultation at, or prior to, the system design stage with all relevant interested parties within the following list:

a) the authority responsible for enforcing fire safety legislation (e.g. the building control authority, fire authority, local authority, Health and Safety Executive);

— the property insurer.

NOTE 1 Where any variations from the recommendations of this part of BS 5839 are proposed, they should be agreed with the relevant interested parties.

NOTE 2 Some of the consultations may be undertaken by parties, such as the designer or consultants, acting on behalf of the user or purchaser.

NOTE 3 Even where none of the above is considered to be an interested party, advice is available from enforcing authorities and, in the case of Category P systems, property insurers.

b) The designer of the system should ensure that, to the extent appropriate, there is consultation at the design stage with all relevant interested parties within the following list:

— the user or purchaser;

— consultants (including architects, mechanical and electrical consultants and fire engineering consultants).

c) The installer of the system should ensure that, to the extent appropriate, there is consultation with all relevant interested parties. These might include the following:

— the designer;

— the user or purchaser;

— the supplier of the system;

— consultants (including architects, mechanical and electrical consultants and fire engineering consultants).

d) Before an order is placed for the system, the responsibility for each of the following stages should be clearly defined and documented:

— system design;

— installation;

— commissioning.

e) Where a fire detection and alarm system is to be integrated with a voice alarm system, one organization should take responsibility for the interface connections and all necessary communications between the fire detection and alarm system and the voice alarm system.

f) Where a fire detection and alarm system is to be interfaced with another system or facility (such as a fire extinguishing system, smoke control system or lift grounding facility) that is the responsibility of an organization other than the installer of the fire detection and alarm system, the responsibility of each organization should be clearly defined and documented.

7 Variations from the recommendations of this standard

7.1 Commentary

This part of BS 5839 is a code of practice and, as such, its contents take the form of recommendations, rather than requirements. The recommendations are primarily based on recognized good practice in the design, installation, commissioning and maintenance of fire detection and alarm systems. Accordingly, they are likely to be suitable for the majority of normal applications.

There will, however, be applications in which the recommendations are unsuitable and would lead to systems that would be unnecessarily expensive, incorporating measures that could not be regarded as cost-effective, or that could be difficult to install. In extreme cases, the recommendations might even be inadequate to provide the appropriate level of protection.

In these circumstances, variations from the recommendations may be necessary, even though, in general, the user, purchaser, enforcing authority or insurer requires quite strict compliance with the standard. Variations were described as "deviations" in the previous version of this part of BS 5839. This term is now deprecated, since it implied shortcomings or errors in design, whereas, in reality, the term referred to aspects of design that were appropriate and intentional, albeit not compliant with one or more recommendations of the standard.

This does not, however, imply that the designer or installer has freedom to ignore the recommendations of this standard under circumstances in which a user, purchaser, enforcing authority or insurer seeks compliance with it. Variations always need to be the subject of specific agreement amongst all interested parties and need to be clearly identified in all relevant system documentation.

Some variations can arise from a fire risk assessment, in which it is determined, for example, that an area of the building may be unprotected by automatic fire detection, albeit that, in the Category of system otherwise deemed necessary, protection is recommended in this standard. Other variations may be based on the engineering judgement of a competent person, who might, for example, consider that the extent of protection disabled in the event of a single cable fault can slightly exceed the limitations recommended in this standard, without any significant decrease in the integrity of the system.

It also needs to be borne in mind that, while it is necessary for certain limitations or performance levels recommended in this standard to be quantified, so that the relevant recommendations are expressed numerically, the values quoted are often arbitrary. The values are often based on well-established and proven custom and practice, or on the judgement of experts. While they are, therefore, generally applicable, rigid adherence to them might not be appropriate in every case, nor is it the case that minor variations need necessarily have any significant effect.

Examples of arbitrary values include, but are not restricted to, the following:

— *maximum zone size;*

— *maximum area of protection disabled in the event of specified fault conditions;*

— *maximum size of open areas in public buildings above which duplication of sounder circuits is recommended;*

— *maximum travel distance to the nearest manual call point;*

— *maximum area of coverage of an automatic fire detector;*

— *minimum sound pressure levels;*

— *minimum duration of standby power supplies;*

— *performance parameters for standard and enhanced fire resisting cables, and restrictions on the use of the former type of cable.*

Thus, for example, although this standard recommends that no one should travel further than 45 m to reach the nearest manual call point, a competent person might judge that, in a particular building, a distance of 47 m is acceptable because, perhaps, this leads to the most appropriate locations for the manual call points. Similarly, in an office building, it might be judged that, say, sound pressure levels of 57 dB(A) could be accepted in a number of cellular offices, since to achieve the 60 dB(A) recommended in this standard, would necessitate a large increase in the number of sounders (and hence in cost), when the difference of 3 dB is only just perceptible to occupants.

 © BSI 15 October 2002

7.2 Recommendations

The following recommendations are applicable.

a) Any variations from the recommendations of this part of BS 5839 incorporated within a specification or design proposal should be clearly identified, so that they are obvious to any party from whom approval of the specification or design proposal may be sought, such as the user, purchaser, enforcing authority or insurer.

b) Any variations from the recommendations of this part of BS 5839 identified or proposed during installation or commissioning, but not clearly identified in the documented design, should be documented (other than in the case of errors or "snags" for which rectification is proposed), for subsequent approval.

NOTE This recommendation is not intended to imply that it is the responsibility of the installer or commissioning engineer to verify or certificate compliance of the system design with this standard. However, if variations are identified by an installer or commissioning engineer, particularly variations related to circumstances that might not have been known to the designer (e.g. structural features of the building that affect detector number or siting, or conditions in the building that might result in an unacceptably high rate of false alarms), they should be documented for referral to the designer, user or purchaser for agreement or action.

c) All variations, whether of the type described in a) or b), should be agreed amongst the interested parties (see Clause **6**).

d) All variations should be listed in the relevant system certificate (see Clause **41**).

blank

Section 2. Design considerations

8 Relationship between system Category and areas protected

8.1 Commentary

8.1.1 *General*

*Before fundamental system design can begin, it is essential that the system Category is defined, as this will govern the areas in which the manual call points and any automatic fire detectors are to be installed, along with other design parameters. The areas that are to be protected need to be such as to enable the objective of the system to be satisfied (see **5.1**).*

NOTE System Category is simply a shorthand means of describing whether the system is manual or automatic, and in the case of automatic systems, the object of the automatic fire detection system. The appropriate extent of automatic fire detection will normally be determined by a fire risk assessment, rather than a rigid application of system Category to every building of a specific type or occupancy.

8.1.2 *Protection of life*

If the objective is to protect the occupants of a building in which no one sleeps, and fire is likely to be detected by people before smoke seriously reduces visibility in escape routes, automatic fire detection might not be necessary: a Category M system might suffice. Whether there is a need for automatic fire detection and, if so, the extent to which it needs to be provided, will often be determined by a fire risk assessment carried out on behalf of the user; such a fire risk assessment might be required by legislation.

If there is significant probability that a fire in the building, or part of the building, could threaten escape by occupants before it is detected by people in the building, a Category M system is unlikely to be adequate, and the provision of automatic fire detection will be necessary. This could arise from the likelihood of the presence of occupants at special risk (including sleeping occupants), inadequate structural fire protection or the probability of very rapid fire development.

*In some buildings, a fire risk assessment might determine that unacceptable risk to occupants can be reduced by the installation of fire detectors in only selected rooms or areas in the building. A Category L5 system might then be suitable, but it will be necessary for the purchaser or user to inform the designer of rooms or areas that are to be protected [see **5.2**d)]. A Category L5 system may form part of a fire engineering solution, in which automatic fire detection is just one component of the solution.*

If there is a need for a reliable means of warning of the presence of smoke in escape routes, a Category L4 system, in which smoke detectors are installed in escape routes, such as corridors and stairways, may be appropriate. For example, this can arise from the presence of lone workers in a large, generally unoccupied area of a building in which the fire hazard level is assessed to be relatively high.

In buildings in which people sleep within rooms accessed by corridors, other than short lengths of corridor, research has shown that passage of hot fire gases through a door crack can produce smoke sufficiently dense and cool for a corridor to become smoke-logged before adequate warning can be given by detectors in the corridor. In this case, a Category L3 system, in which detectors are installed in rooms that open onto the escape routes, as well as within the escape routes themselves, is likely to be appropriate. The purpose of the detectors in these rooms is to give an early enough warning to occupants, other than, possibly, the person in the room of fire origin, such that they have adequate time to escape before their escape route is impassable as a result of smoke. Accordingly, within the rooms, the use of one or more of the following types of detectors is satisfactory: heat, smoke, combustion gas or multi-sensor detectors.

In some circumstances, even a Category L3 system might not be sufficient to achieve the life safety objective. A fire risk assessment might determine that, in addition to the protection afforded by a Category L3 system, fire detectors need to be installed in rooms or areas that would not be protected in a Category L3 system. The resulting system would then be a Category L2 system. A Category L2 system would be appropriate if a risk assessment determines that the fire risk associated with rooms other than those opening onto escape routes is unacceptable. Alternatively, there might be a need to give enhanced early warning to occupants of certain rooms, such as disabled people, of a fire in their own room. In this case, smoke or combustion gas detectors within the rooms in question are necessary; heat detectors will not respond quickly enough.

The highest possible enhancement of life safety is provided by a Category L1 system. In a Category L1 system, all areas of the building are protected by automatic fire detectors. In rooms or areas in which there is a need for automatic detection of fire in order to protect the occupants of these rooms or areas, smoke or combustion gas detectors need to be provided. In other rooms, heat detectors might be acceptable. An L1 system might be appropriate in buildings in which there is a significant number of occupants at special risk in the event of fire (e.g. hospitals and certain residential care premises), or in which, throughout the building, structural fire precautions are not of as high a standard as normally specified for buildings of that type.

© BSI 15 October 2002

A Category M system, in which there is no automatic fire detection system, is only likely to suffice if no one sleeps in the building and fire is likely to be detected by people before smoke seriously reduces visibility in the escape routes.

8.1.3 *Protection of property*

If the objective is property protection, there needs to be sufficient provision of automatic fire detectors to ensure that fire is detected at an early stage, that an effective warning is given in time for fire-fighters to take action before unacceptable damage to property occurs and that an indication of the location of the fire is given to those responding to the alarm signal. The value of the system will depend on a combination of the speed of detection, the delay before fire-fighters are summoned, the attendance time of trained fire-fighters, and the probable rate of fire spread. If the attendance time of the fire service (whether private or local authority) is incompatible with the probable rate of fire spread, adequate property protection might not be achieved purely by automatic fire detection, even if a Category P1 system is installed. The system may, however, form one component of a "package" of fire protection measures, such as compartmentation (to limit the extent of fire spread prior to the arrival of the fire service) or an automatic fire suppression system (to control or extinguish the fire prior to the arrival of the fire service).

The highest standard of property protection will be afforded by a Category P1 system. In a Category P1 system, automatic fire detectors are installed in all areas of the building. This Category of system might be appropriate if the system is intended to satisfy the requirements of fire insurers, if the building or its contents are of high value, or if the facilities provided within the building are critical to the operations of an organization.

A lower, but often adequate, standard of property protection may be afforded by a Category P2 system. In a Category P2 system, automatic fire detectors are provided only in specified rooms or areas of the building. The protected areas are usually those in which the fire hazard level is high, or from which there is significant potential for fire to spread and cause damage to contents of high value. Since the determination of these factors will depend on a fire risk assessment, it is important that whoever specifies a Category P2 system qualifies this description with details of the rooms or areas that are to be protected.

8.2 Recommendations

The following recommendations are applicable.

a) System documentation, including any purchase specification, tender document, design proposal, submission to enforcing authorities or insurers for approval and the certificate issued by the Designers (see Clause **41**), should clearly identify the system Category as well as, where appropriate, the areas to be protected and any specific proposals for the type(s) of detector to be used.

b) Any specification or proposal for a Category L5 system should clearly identify the rooms or areas that are to be protected by automatic fire detectors.

NOTE 1 There might also be benefit in giving a simple description of the objective of the protection proposed, particularly in submissions to enforcing authorities.

NOTE 2 The standard of protection (extent of coverage) of a Category L5 system might be lower or higher than that afforded by Category L2, L3 or L4 systems.

c) In Category L3 and L4 systems, smoke detectors, or a mixture of smoke and combustion gas detectors, should be provided in the following:

— all escape stairways;

— all corridors;

— any other areas that form part of the common escape routes.

NOTE 3 Main access and egress stairways normally form part of escape routes, and should be treated as escape stairways.

d) In Category L3 systems, heat, smoke, combustion gas or multi-sensor detectors should be installed in all rooms that open onto the escape routes described in c), except that rooms opening onto corridors of less than four metres in length need not be protected, provided fire resisting construction, including doors separates these corridors from any other section of the escape routes.

NOTE 4 For recommendations on the siting of these detectors, see **22.3**e).

NOTE 5 An open plan area of accommodation, in which occupants will quickly become aware of fire, need not be protected in a Category L3 or L4 system, even though occupants within the area clearly need to pass through the area in the first stage of escape, unless it forms part of the escape route from other areas. However, in a Category L3 system a heat, smoke, combustion gas detector or multi-sensor detector should be installed on the accommodation side of any door that opens into an escape stairway, a corridor of more than four metres in length (or alternatively, where stairways are approached through low fire risk lobbies, any door that opens onto the lobby).

 © BSI 15 October 2002

e) In a Category L2 system, the rooms or areas protected should comply with the recommendations in c) and d) for a Category L3 system, but, in addition, automatic fire detectors should be installed in rooms in which the fire risk (see **3.23**) is high enough to warrant individual protection.

NOTE 6 Any reference to a Category L2 system (e.g. in a specification, proposal or submission to an enforcing authority) should clearly identify the rooms or areas in which these additional detectors are to be installed and should identify the type of detector (e.g. heat, smoke or combustion gas) required.

f) In a Category L1 or P1 system, automatic fire detectors should be installed in all rooms and areas of the building, but the following rooms or areas need not be protected if they are of low fire risk (see **3.31**):

— toilets, shower rooms and bathrooms;

NOTE 7 In some public buildings, such as hospitals and shopping centres, toilets might not be of low fire risk, owing to the potential for arson.

— stairway and toilet lobbies;

— small cupboards (typically, less than 1 m^2);

NOTE 8 A riser in which there is a fire resisting floor and ceiling may be treated as a cupboard.

— some shallow voids (less than 800 mm in depth) [see **22.2**d)].

g) In a Category L1 system, the detectors within escape routes should be smoke detectors, or a mixture of smoke and combustion gas detectors.

h) In a Category P2 system, the rooms or areas to be protected by automatic fire detectors should be clearly identified in the specification or proposal. There should be physical barriers between protected and unprotected areas to limit the spread of smoke and hot gases in, at least, the early stages of fire.

NOTE 9 It is not necessarily the case that these physical barriers should have a recognized period of fire resistance.

NOTE 10 The physical barriers described above might be unnecessary where detectors are installed to detect fires in specific equipment.

9 Actuation of other fire protection systems or safety facilities

9.1 Commentary

*Any of the system Categories defined in **5.1** may be used to actuate other fire protection systems or trigger safety facilities, whether for the purpose of life safety, property protection or a combination of the two.*

If the system is to be used for the actuation of other fire protection systems or safety facilities, the recommendations of this part of BS 5839 might, or might not, be necessary or sufficient. The system might have special requirements in respect of the number, zoning and siting of detectors, provision of power supplies, control, indication or other facilities, or monitoring and fire resistance of interconnecting wiring.

It needs to be ensured that the interconnection of other systems or equipment with the fire alarm system does not prejudice the reliability of the fire alarm system.

9.2 Recommendations

The following recommendations are applicable in the case of systems intended to actuate other fire protection systems or safety facilities (e.g. by triggering an automatic fire extinguishing system, closing fire resisting doors, shutting down an air handling system or grounding lifts).

a) The system should comply with the recommendations of any applicable part of BS 7273.

b) If no part of BS 7273 is applicable, any special requirements for system design should be identified in the purchase specification or design proposals.

c) If operation of the fire alarm system during routine testing would have an undesirable effect on other systems or equipment, means should be provided for disabling the automatic actuation of the system or equipment. The facility for disablement, and the indication of disablement, should comply with BS EN 54-2.

d) The other equipment or systems should not draw power from the fire alarm system in the non-fire state, other than for indicators and interface devices (e.g. relays). The power consumption of any such indicators and interface devices should be taken into account in the calculation of battery capacity (see **25.4**).

10 Systems in explosive gas or dust atmospheres

10.1 Commentary

If it is necessary to install fire alarm equipment or wiring in areas where an explosive atmosphere could result from the presence of flammable gases, vapours or mists, or the presence of combustible dusts, special protection measures are essential to ensure that the potential for ignition of the atmosphere by the fire alarm equipment or wiring is minimized.

10.2 Recommendations

The following recommendations are applicable.

a) Any system (or part of a system) protecting an area, or with cables passing through an area, in which there may be an explosive gas, vapour or mist atmosphere should comply with the requirements of BS EN 60079-14.

b) Any system (or part of a system) protecting an area, or with cables passing through an area, in which there may be an explosive dust atmosphere should comply with the requirements of BS EN 50281-1-2.

11 System components

11.1 Commentary

The reliability of the system to perform its functions on demand will, to a significant degree, be governed by the reliability of individual components. In general, it is advisable that all components, such as manual call points, detectors, control and indicating equipment and fire alarm devices, comply with relevant British Standards, and have undergone type testing to these standards. It is advisable to use components having certification under a recognized product certification scheme (comprising third party certification of product conformity against a relevant standard, based on testing and continuing surveillance, together with assessment of the manufacturer's quality assurance systems against BS EN ISO 9000).

Where there is no relevant British, European or International Standard, it is advisable that care is taken to ensure, as far as possible, that the components are fit for their purpose. Third-party approval against an appropriate test standard may provide assurance of this.

Compliance of an individual component with a recognized standard does not necessarily ensure that it will operate satisfactorily in conjunction with another component that complies with the relevant standard for that component. It is essential that compatibility between components is taken into account by the designer of the system.

11.2 Recommendations

The following recommendations are applicable.

a) Manual call points should conform to the requirements of BS EN 54-11 for Type A ("single action") manual call points.

Point heat detectors should conform to the requirements of BS EN 54-5 for Class A1 or A2 detectors, unless the foreseeable maximum ambient temperature in the protected area is 40 °C or above, in which case a Class B-G detector should be used as appropriate (see Section 3 of this standard).

b) Point smoke detectors should conform to BS EN 54-7.

c) Flame detectors should conform to BS EN 54-10.

d) Optical beam smoke detectors should conform to BS EN 54-12.

e) Carbon monoxide fire detectors should, in the absence of any relevant British, European or International Standard, be capable of detecting a fire within 60 s if the carbon monoxide concentration exceeds 60 ppm, and should have a fire sensitivity (in combination with any other sensors within the fire detector) sufficient to pass TF5 of BS EN 54-7 where the detector is declared to be suitable for installation instead of a smoke detector, or TF2 and TF3 of BS EN 54-7 where the detector is declared only to be suitable for detecting smouldering fires. Any restrictions in the use of the detectors declared by the manufacturers should be taken into account in the system design.

f) Control and indicating equipment should conform to BS EN 54-2.

g) Audible fire alarm devices should conform to BS EN 54-3.

 © BSI 15 October 2002

h) Power supply equipment should conform to BS EN 54-4.

i) Cables should conform to the recommendations of Clause **26**.

j) Those functions of the system that are recommended in this part of BS 5839, for which the storage of programs and data is necessary to control the fire detection and alarm system, should comply with the additional design requirements for software controlled control and indicating equipment in BS EN 54-2.

k) Where a PC is used as a user interface, e.g. in networked systems, it should be considered as a supplementary interface and there should be control and indicating equipment conforming to BS EN 54-2 mounted adjacent, as it is unlikely that a PC would meet the requirements of BS EN 54-2.

l) Radiopaging transmitters and receivers should conform to the relevant British or harmonized European Standards applicable.

NOTE Some elements of a) to k) may be combined to form a single device.

12 Monitoring, integrity and reliability of circuits external to control equipment

12.1 Commentary

External circuits need to be arranged such that the probability of faults that could prevent the system from giving a fire warning is minimized. Such faults will, however, occur occasionally. Work on the system, for the purpose of modification, repair or routine attention, may also cause an impairment of the system to operate as designed in the event of fire.

Measures are incorporated within this code of practice to limit the probability of impairments, whether as a result of faults or work on the system, and to limit the duration of any impairment. The wiring of all critical signal paths is protected against mechanical damage and damage by fire. Critical signal paths are monitored, so that faults will be identified quickly. Compliance with the recommendations for maintenance arrangements ensures that any such fault is quickly repaired. The probability that a fault will exist at the time of a fire is, therefore, considered to be extremely low. In the event of fire, fire damage to wiring during the period required for evacuation is unlikely to occur in view of the recommendations of this code of practice for the fire resistance of cables.

As a result of the above considerations, duplication of, or redundancy in, external circuits is not normally necessary. However, in the case of circuits serving fire alarm devices, special measures need to be taken to ensure that, during, or following, evacuation, damage to any wiring, with resultant loss of the evacuation signal, does not imply to occupants of the building that it is safe to remain in, or re-occupy, the building. This can be achieved by ensuring that, in the event of a short circuit developing on any fire alarm device circuit during a fire (e.g. at a cable termination), a minimum of one audible fire alarm device continues to sound as a reminder that the system has not been silenced or reset. Normally, this sounder is located close to the control and indicating equipment, as this equipment will be sited in a suitable area (e.g. a reception area, security control room or main entrance foyer) at which the reminder needs to be given.

Note that duplication of sounder circuits throughout a building is not generally necessary and can even fail to achieve the objective outlined above. In this case, if fire damages one circuit, it is also likely to damage any other circuit in the same area. However, in a large building with multiple sounder circuits, each serving a different area of the building, the above objective is satisfied. In a smaller building, which could, otherwise, be served by a single sounder circuit, additional measures will be necessary to ensure that, if this single circuit fails during a fire, at least one sounder (e.g. on a second circuit) continues to operate.

However, in buildings designed to accommodate the general public in large numbers, typically within a single space, the threat to life in the event of a fire may be such that additional fire alarm device circuits, over and above those described above, is justified; this then addresses the remote possibility of failure or impairment of a single circuit serving a large public space at the time of a fire. Frequently, such buildings are served by a voice alarm system. In the case of such systems, BS 5839-8 recommends additional loudspeaker circuits in large, uncompartmented public spaces of public buildings such as transport terminals, shopping malls, places of entertainment, large department stores and leisure centres. The size of the uncompartmented public space above which additional loudspeaker circuits are recommended by BS 5839-8 is entirely arbitrary but, for consistency, if such a large public space is protected by audible fire alarm devices, duplicated and evenly distributed fire alarm device circuits need to be installed within the space; such duplication is, however, not necessary in other parts of the building.

*System design needs to be arranged to limit the extent of impairments, whether as a result of faults or work on the system. A fault (but not fire) signal needs to be given at the control and indicating equipment in the event of any failure in the critical signal path (see **3.13**).*

Care needs to be taken in the use of multi-core cable for the wiring of more than one circuit. It needs to be assumed that any fault that affects a multi-core cable affects all conductors of the cable; this precludes the use of multi-core cable for certain applications in which the failure of more than one circuit as a result of a single fault is precluded by the recommendations of this standard.

12.2 Recommendations

12.2.1 *Fault monitoring*

The following recommendations are applicable.

a) A fault indication should be given at the control and indicating equipment within 100 s of the occurrence of any of the following conditions:

1) short circuit or open circuit in any circuits serving manual call points or fire detectors;

2) the removal of a manual call point or a fire detector that is designed to be detachable;

3) short circuit or open circuit of any circuits serving fire alarm devices;

4) short circuit or open circuit of any wiring between any power supply that is in a separate enclosure and the equipment to which it supplies power;

5) any earth fault that is capable of preventing the system from performing in accordance with the recommendations of this part of BS 5839;

6) the rupture of any fuse, or the operation of any other protective device, that affects the ability of the system to perform as recommended in this part of BS 5839;

7) a short circuit or open circuit in the wiring between separate control and/or indicating equipment that is provided in order to satisfy the recommendations of this part of BS 5839;

8) a short circuit or open circuit in the wiring between main and any repeat control and/or indicating equipment (such as a mimic diagram) that is provided in order to satisfy the recommendations of this part of BS 5839;

9) a short circuit or open circuit in the wiring between control equipment and any separate enclosure of equipment used for transmission of alarm signals to an alarm receiving centre see **15.2**k);

10) removal from its circuit of a fire alarm device that is designed to be detachable.

b) A fault indication should be given, within the times indicated below, in the event of any of the following:

1) failure of the main power supply to any part of the system (within 30 min of occurrence);

2) failure of the standby power supply (within 15 min of occurrence);

3) failure of the battery charger (within 30 min of occurrence);

4) reduction of the battery voltage to less than the voltage specified in BS EN 54-4 at which a fault warning shall be given (within 30 min of occurrence).

c) Visual indications of the faults specified in a)3) and a)9) should continue to be given at the control and indicating equipment during a fire alarm condition. Other fault indications may be suppressed during the fire alarm condition.

NOTE The recommendations of a), b) and c) will be satisfied by the use of control and indicating equipment and power supply equipment conforming to BS EN 54-2 and BS EN 54-4 respectively provided the system installation complies with the recommendations of the manufacturer on which compliance with BS EN 54-2 and BS EN 54-4 may be reliant.

d) Where any standby power supply comprises a number of batteries connected in parallel, a fault indication should be given in the event of disconnection of any one battery (within 15 min of occurrence).

e) If the system incorporates a separate voice alarm system, any short circuit or disconnection of the communicating link between the fire detection and alarm system and the voice alarm system should be indicated at the fire detection and alarm system control and indicating equipment within 100 s. Reference should also be made to Clause **7** of BS 5839-8:1998.

 © BSI 15 October 2002

f) If the system is used to actuate other fire protection systems or safety facilities (see Clause **9**), reference should be made to BS 7273 or other applicable codes of practice for recommendations on monitoring connections between the fire detection and alarm system and the other systems or equipment.

g) Where tactile fire alarm devices provided for people with impaired hearing are installed, the system should indicate the failure to receive a monitoring signal correctly [see **18.2.1**b) and Annex C].

12.2.2 ***System integrity***

The following recommendations are applicable.

a) A fault on one circuit containing manual call points, fire detectors or fire alarm devices, or a combination of them, should not affect any other circuit.

b) Any fault forming a cross-connection between a detector circuit and a sounder circuit should not affect any circuits other than the two circuits involved.

c) A single short circuit or open circuit fault on an automatic fire detector circuit should neither disable protection within an area of more than 2 000 m^2, nor on more than one floor of the building plus a maximum of five devices (automatic detection, manual call points, sounders or a combination of these) on the floor immediately above and five devices on the floor immediately below that floor.

d) Two simultaneous faults on a manual call point or fire detector circuit should not disable protection within an area greater than 10 000 m^2.

NOTE 1 The areas quoted in c) and d) are relatively arbitrary; in the case of c), the recommendation is based on custom and practice in conventional fire alarm systems over many years. Engineering judgement might determine that, in a given system, minor increases in the areas quoted do not significantly impede the system integrity, but this should then be regarded as a variation from the recommendations of this standard.

e) For software controlled Control and Indicating equipment that has more than 512 detectors and/or manual call points connected, reference should be made to the manufacturer's instructions regarding the means by which compliance with BS EN 54-2 should be achieved.

f) Where detectors are designed to be detachable from their bases for the purpose of routine maintenance of the system:

1) removal of any detector(s) from the circuit should not affect the operation of any manual call point, regardless of whether locking devices are used to secure the detectors within their bases;

NOTE 2 This recommendation applies even if all fire detectors in the system are removed from circuit.

2) during the design stage, consideration should be given to the possibility of malicious removal of detectors. If malicious removal is considered likely, detectors of a type that can be removed only by the use of a special tool or special technique should be used.

NOTE 3 A special tool in this context is a tool not likely to be carried by a member of the general public. Slot-headed screws would not be acceptable, since various articles can be used as screwdrivers.

g) Any facility specifically provided for deliberate disablement of manual call point or detector circuits should be such that it is possible to disable protection throughout one zone of the system without disabling protection in other zones. Use of such facilities should not prevent evacuation of the building by use of an evacuate control on, or close to, the control and indicating equipment.

h) Removal of any manual call point or detector from its circuit should not affect the ability of any fire alarm device to respond to an alarm signal other than in the case of devices that incorporate a fire alarm sounder and detector in the same unit.

NOTE 4 A sounder and a detector would be combined if they are mounted on a single fixing.

i) Fire alarm devices should be capable of being removed only by the use of a special tool.

j) In the event of a single open circuit or short circuit fault on any circuit that serves fire alarm sounders, at least one single fire alarm sounder, normally located in the vicinity of the control and indicating equipment, should still sound correctly if a fire alarm condition occurs anywhere within the building. This fire alarm sounder should have an identical sound to the general fire alarm sounders in the building [see also **15.2**c)].

NOTE 5 It is possible to comply with this recommendation by at least the following two arrangements, although other arrangements are not precluded:

— wiring all fire alarm sounders within the building on a single sounder circuit, with the additional provision of a second, independent sounder circuit, to which only a single sounder, located in the vicinity of the control and indicating equipment, is connected [see Figure 1a)];

— wiring all fire alarm sounders on a ring circuit capable of transmitting signals in either direction; the first (or last) three devices on the circuit would then comprise a short circuit isolator, capable of isolating the circuit in the event of detection of a short circuit, a sounder and a further short circuit isolator [see Figure 1b)].

NOTE 6 The sounder that continues to operate will normally comprise one of the general alarm sounders in the area in which the control and indicating equipment is housed. In a building without phased evacuation, the alarm sounder will give an "Evacuate" signal until silenced. In a building with multi-phase evacuation, the sounder may give an "Evacuate" signal or "Alert" signal until silenced, according to the location(s) from which the fire alarm signal originates and the phase of the evacuation at the time in question.

k) In buildings designed to accommodate the general public in large numbers (e.g. transport terminals, shopping centres, places of public entertainment, department stores and leisure centres), at least two sounder circuits should be provided in every uncompartmented public space if the space is either:

i) greater than 4 000 m^2 in area; or

ii) designed to accommodate more than 500 members of the public.

This should be achieved either by means of at least two sounder circuits, which are evenly distributed and interleaved, such that adjacent sounders are on different circuits, or by alternative means (e.g. a protected loop circuit) such that not more than 50 % of sounders in that area are lost in the event of a single open or short circuit fault.

NOTE 7 The figures of 4 000 m^2 and 500 members of the public are arbitrary, but are the criteria for duplication of loudspeaker circuits of voice alarm systems complying with BS 5839-8:1998. Engineering judgement might determine that, in a given system, a single sounder circuit may be used to protect a public space that slightly exceeds these criteria without undue increase in risk to occupants. This should then be regarded as a variation from the recommendations of this standard.

NOTE 8 It is not intended that this recommendation need be applied to small cellular spaces or non-public areas of the buildings in question.

l) Where two (or more) sounder circuits are necessary in order to satisfy the recommendations of j) or k), the circuits should not be contained within a common cable sheath. For example, two circuits intended to satisfy these recommendations should not be served by a common four core cable, as this would not adequately protect against the simultaneous loss of both circuits.

NOTE 9 This recommendation does not apply to sounder circuits that need not be independent to satisfy the recommendations of this standard (e.g. that are provided purely as a result of electrical engineering considerations).

m) If the control and indicating equipment is supplied with power from power supply equipment contained in a separate enclosure, the connections between the equipment should be duplicated such that a single open or short circuit in the connections does not completely remove power from the control and indicating equipment.

 © BSI 15 October 2002

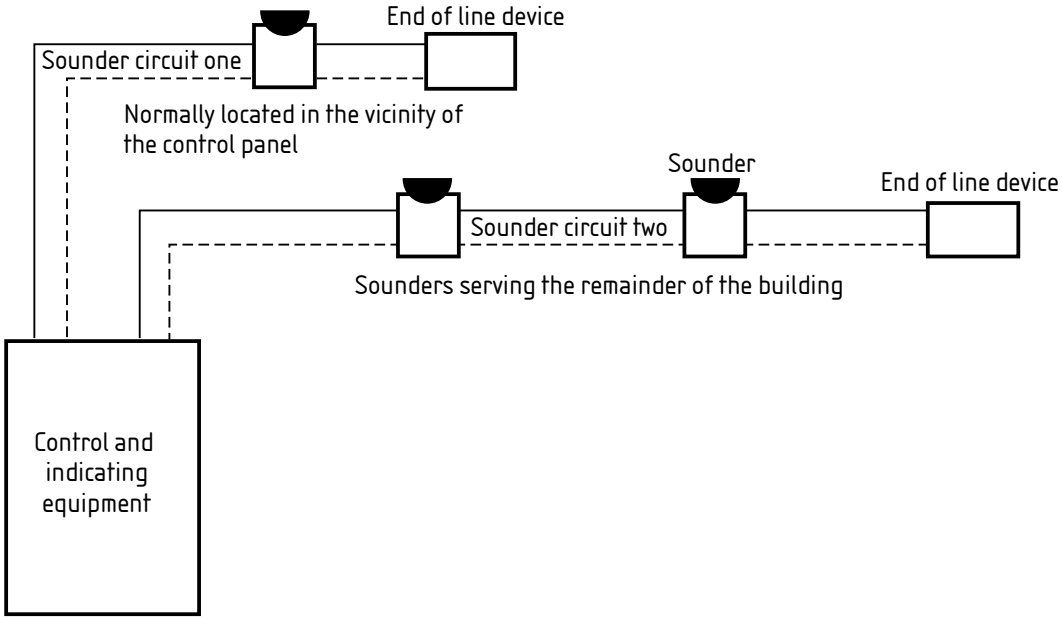

Figure 1a) — Radial sounder circuits [see **12.2.2**j)]

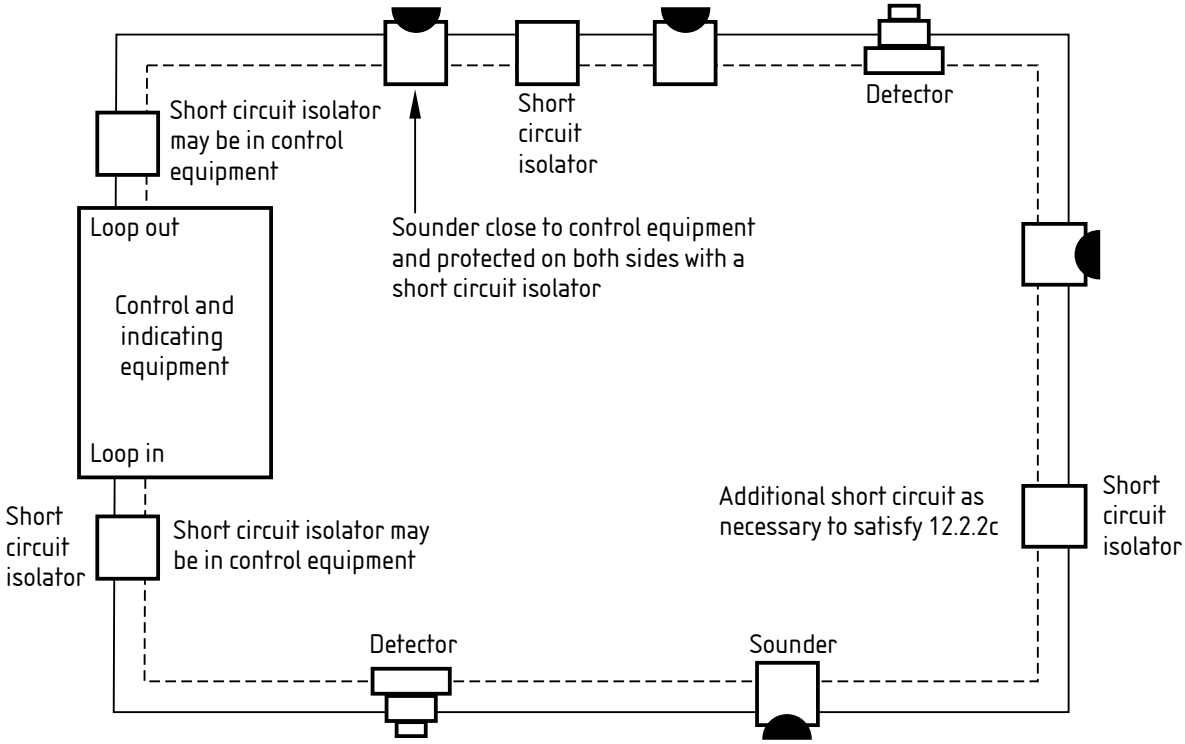

Figure 1b) — Ring sounder circuits [e.g. addressable loops [see **12.2.2**j)]

13 Detection zones

13.1 Commentary

*In order to direct those responding to a fire alarm signal, particularly the fire service, to the area of a fire, all buildings, other than very small buildings, need to be divided into detection zones (see **3.15**). Detection zones need to be small enough for a fire to be located quickly.*

*Even if the system is addressable (see **3.1**), detection zone indication needs to be provided, as this often provides a quicker, albeit less specific, indication of the location of a fire than typical addressable text displays. Zone indicators also provide a simple "at a glance" overview of the extent of fire or smoke spread.*

If the alarm is raised by a manual call point, as opposed to an automatic detector, detection zone indication might be misleading; on discovery of a fire a person might operate a manual call point that is a considerable distance from the fire. The benefits of zoning in a Category M system are, therefore, less significant.

If a detector is concealed in a relatively inaccessible area (such as a floor or ceiling void), it is normally desirable to provide a remote indication of its operation. In an addressable system, the provision of an individual remote indicator might not be necessary provided that the location of each fire detector is clearly indicated at the control and indicating equipment.

13.2 Recommendations

13.2.1 *Recommendations applicable to all detection zones*

The following recommendations are applicable.

a) If manual call points are located on the landings of an enclosed stairway [see **20.2**c)], the manual call point on each level should be incorporated within the zone that serves the adjacent accommodation on that level.

b) If the total floor area of the building is greater than 300 m^2, each zone should be restricted to a single storey.

c) If the total floor area of the building is less than 300 m^2 a zone may cover more than a single storey.

d) For voids above or below the floor area of a room, these may be included within the same zone of the room, provided that the voids and the room constitute a single fire compartment.

13.2.2 *Additional recommendations applicable to detection zones that contain only manual call points*

The floor area of a single zone should not exceed 2 000 m^2, other than in the case of a zone comprising mainly a single, open plan area (e.g. an uncompartmented warehouse), which should not exceed 10 000 m^2 in area.

13.2.3 *Additional recommendations applicable to detection zones that contain non-addressable automatic fire detectors*

The following recommendations are applicable.

a) The floor area of a single zone should not exceed 2 000 m^2.

b) The search distance (the distance that has to be travelled by anyone responding to a fire alarm signal after entry to the zone in order for the location of the fire to be determined visually, see **3.50**) should not exceed 60 m.

NOTE 1 Having entered the zone, the person responding to the alarm signal need not reach the seat of the fire within the recommended search distance; it is only necessary to become aware of the location of the fire.

NOTE 2 In measuring search distance, the worst case, in which the fire is located at the furthest concealed area from any likely point of entry to the zone, should be considered (see Figure 2).

c) Automatic fire detectors within any enclosed stairwell, liftwell or other enclosed flue-like structure should be considered as a separate zone.

 © BSI 15 October 2002

13.2.4 ***Additional recommendations applicable to detection zones containing addressable automatic fire detectors***

The following recommendations are applicable.

a) Zone indication should be given at the control and indicating equipment even if addressable text information is also available (see **23.2.2**).

b) The recommendations of **13.2.3** apply, except that **13.2.3**b) does not apply if:

1) clear addressable text display of the location of, at least, the first detector to respond to a fire is available at the control and indicating equipment, without manual intervention; and

2) the display, if necessary in conjunction with other information on, or adjacent to, the control and indicating equipment, would enable fire-fighters, unfamiliar with the building, to proceed to the location of the fire.

NOTE For example, the control and indicating equipment may provide a text indication of room number, and a plan adjacent to the control and indicating equipment may show the location of the room.

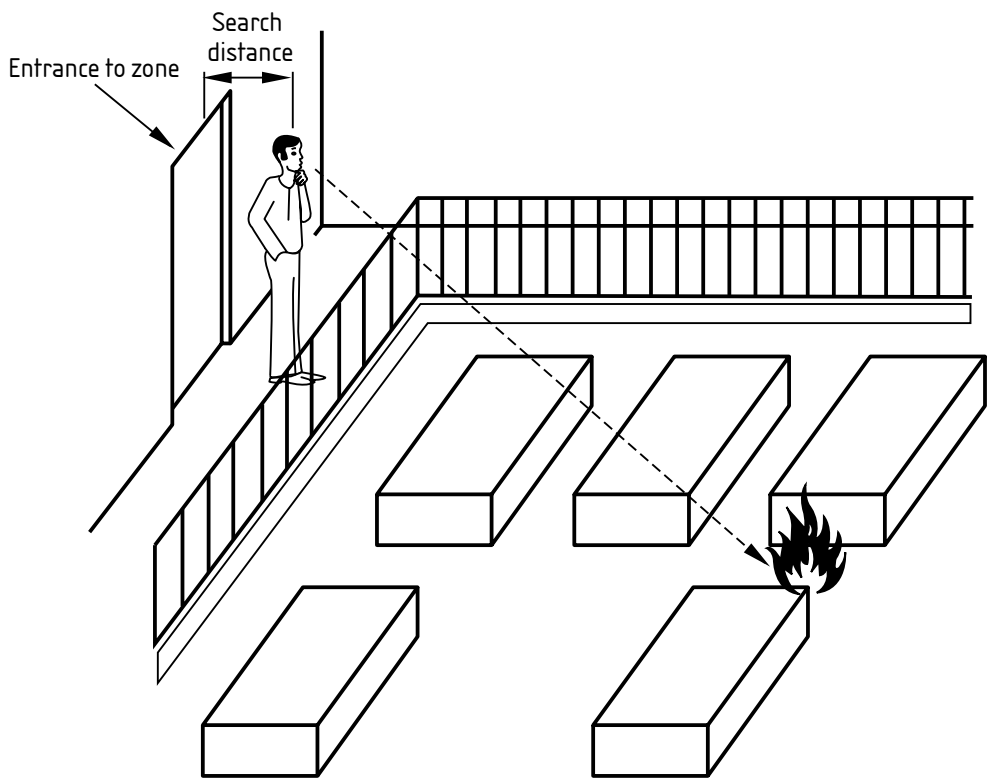

Figure 2 — Examples of search distances in an open area [see **13.2.3**b)]

13.2.5 ***Remote indication of detector operation***

Any remote indicators should be clearly labelled to indicate their function. They should be sited and/or labelled in such as way as to assist in determining the location of the detectors that they serve.

14 Alarm zones

14.1 Commentary

In many buildings, the evacuation strategy will be very simple; on operation of any manual call point, or detection of fire by an automatic fire detector, fire alarm sounders will operate throughout the building to indicate the need for evacuation of the entire building.

In larger, more complex buildings, the "Evacuate" signal may, in the first instance, be restricted in extent (e.g. to a single floor, a limited number of floors or a limited area of the building). In other areas, an "Alert" signal may be given to warn occupants of the alarm signal, without any requirement for those occupants to evacuate.

In order to support such arrangements, it is necessary for the building to be divided into a number of individual alarm zones, such that the operating state of fire alarm sounders in any alarm zone is independent of the operating state of fire alarm sounders in all other alarm zones. The fire alarm sounders in the building are thus grouped, so that, at any point in time, all alarm sounders within any given alarm zone are in the same state (i.e. silent, giving an "Alert" signal or giving an "Evacuate" signal).

The need for sub-division of a building into discrete alarm zones may arise for a number of reasons, including:

— *the use of phased evacuation (see Clause **19**);*

— *to avoid unnecessary disruption when false alarms occur (see Section 3);*

— *any other circumstances in which a two stage alarm arrangement applies.*

Since it will be the case that, when occupants of one alarm zone are required to evacuate, occupants of one or more alarm zones above, below or adjacent to that zone will be expected to remain in the building, every alarm zone needs to be separated from all other alarm zones by fire resisting construction. (In some complex public buildings, such as shopping centres, alarm zones are designed to coincide with smoke control zones, which are separated from each other by smoke curtains, rather than fire resisting construction. However, in this case, the audible signal is normally given by a voice message, rather than audible fire alarm devices.)

As the sub-division of a building into alarm zones implies that, in the early stages of a fire, occupants in certain areas will not be expected to evacuate, the configuration of alarm zones might require approval by the authority responsible for the enforcement of fire safety legislation in the building.

14.2 Recommendations

The following recommendations are applicable.

a) The boundaries of every alarm zone (other than external walls) should comprise fire-resisting construction.

b) The extent of any overlap of signals between alarm zones should not be sufficient to result in confusion of occupants in any area of the building.

c) A common signal should be used throughout all alarm zones to convey the need for evacuation, and a (different) common signal should be used throughout all alarm zones for any alert signal that can be given by the system.

d) While an alarm zone may incorporate more than one detection zone (but not vice versa), the boundaries of alarm zones should coincide with the boundaries of the relevant detection zones (see Figure 3).

e) The user or purchaser should ensure that, where appropriate, the configuration of alarm zones is approved by the relevant enforcing authority or authorities.

 © BSI 15 October 2002

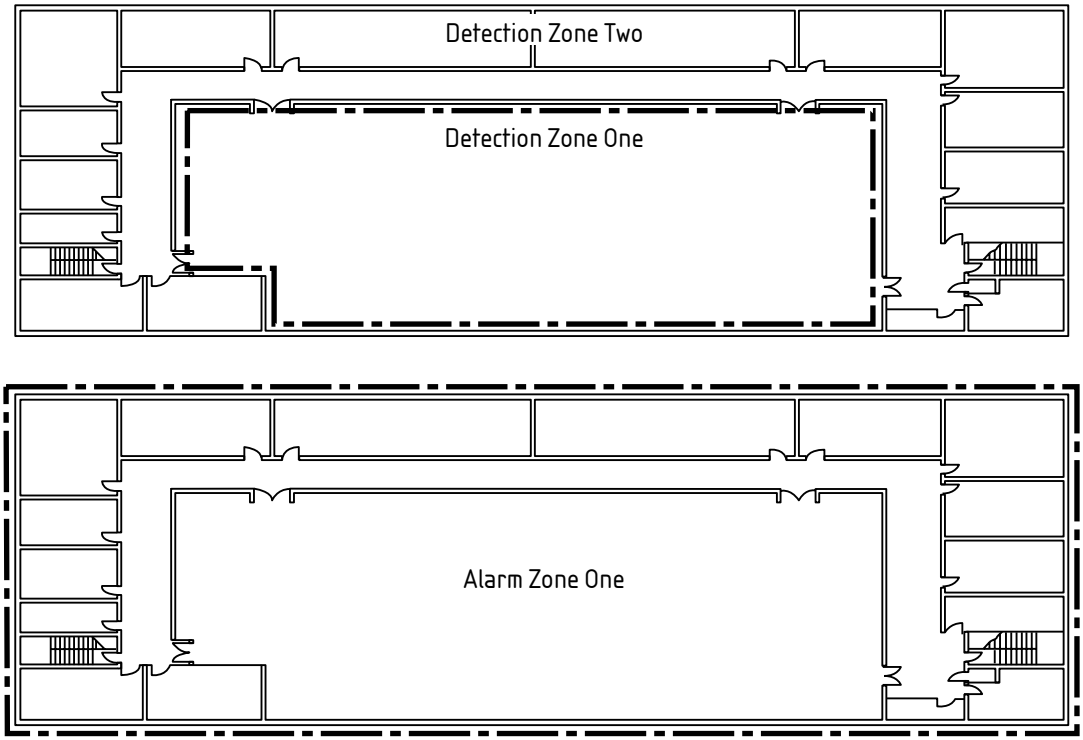

NOTE Alarm zones may incorporate more than one detection zone but not vice versa. Boundaries should coincide.

Figure 3 — Alarm zones [see **14.2**d)]

15 Communication with the fire service

15.1 Commentary

*For a fire alarm system to give the maximum benefit, the fire service needs to be summoned as quickly as possible on every occasion that it operates, unless, in order to avoid false alarms being passed to the fire service, filtering arrangements are appropriate (see **35.2.7**).*

In occupied buildings, the primary means for summoning the fire service needs to comprise a call to the brigade by occupants, using the 999 (or 112) public emergency call system. This is the case even if there is a means for automatic transmission of alarms to an alarm receiving centre, as any automatic system can fail at the time it is required to operate. It needs to be ensured that the fire alarm sounders cannot interfere with any emergency call to the fire service.

In the case of manual fire alarm systems, automatic transmission to an alarm receiving centre is usually unnecessary. When the building is unoccupied, the system will not respond to fire; when the building is occupied, the call to the brigade from occupants will suffice. Automatic means for transmission is only likely to be of benefit, as a secondary means of summoning the brigade, if factors such as the size or complexity of the building, or low level of occupancy, could result in a significant delay between discovery of fire and summoning of the brigade, thereby warranting the duplication of the call to the fire service (i.e. with calls made manually from the premises and automatically via an alarm receiving centre).

Since the objective of a Category L system is evacuation of occupants, rather than protection of property, manual summoning of the fire service by occupants may, again, suffice. However, if the early attendance of the fire service is likely to be essential to life safety in the event of fire (e.g. in hospitals), a secondary, automatic means of transmission might be warranted, unless there are adequate arrangements to ensure that there will be no delay at any time in manual summoning of the fire service by occupants.

Even in a Category L system, if the premises are unoccupied at certain times and the system incorporates automatic fire detection throughout a significant proportion of the premises, it can represent a missed opportunity, in respect of property protection, if no means of automatic transmission of alarm signals is provided.

In a Category P system, unless the premises are continuously occupied at all times, the objective of property protection is unlikely to be satisfied, unless the system incorporates means for automatic transmission of alarm signals to an alarm receiving centre. Even in a Category P2 system, unless the extent of the automatic fire detection is minimal, in premises that are not continuously occupied the absence of an automatic means of transmission of fire signals to an alarm receiving centre is likely to be false economy.

In premises in multiple occupation, the responsibility for summoning the fire service on operation of the fire alarm system always needs to be clearly defined, particularly in the case of Category L or Category P systems. Consultation with the fire service is advisable.

If a Category L or Category P system is installed in non-domestic premises in multiple occupation, there might be a need for automatic transmission of alarm signals to an alarm receiving centre. The primary means of summoning the fire service still needs, if practicable, to comprise a call to the brigade from persons on the premises. However, in some premises in multiple occupation, the reliability of this arrangement can be insufficient, and a secondary means of summoning the brigade via an alarm receiving centre might be warranted.

The reliability of the means for summoning the fire service, whether by manual or automatic means, always needs to be subject to consideration. Methods for automatic transmission may generally be grouped into four categories, according to the means of communication with an alarm receiving centre:

- *— "carrier" systems, in which alarm (and usually line monitoring) signals are transmitted over normal telephone lines, which may be used for normal speech telephony without interfering with the alarm transmission function;*
- *— systems that use public or private cellular radio communication;*
- *— private communication circuits between the protected premises and the alarm receiving centre;*
- *— systems that use the public switched telephone network ("digital communicators").*

Systems in which the transmission path is continuously monitored are preferred. In these systems, failures in the transmission path can be identified quickly and action taken (see BS EN 50131-1), so minimizing the "down time" of the system. Monitored systems might not, however, be available in all areas of the United Kingdom.

Regardless of whether the arrangement for summoning the fire service is manual or automatic, the effect of fire on the reliability of the arrangement needs to be considered (e.g. the effect of fire on persons tasked with summoning the fire services and on communication lines and equipment).

If the services of a commercially operated alarm receiving centre are used, it needs to be ensured that the alarm receiving centre has a formal arrangement with the fire authority in whose area the protected premises are situated for rapid communication with the fire service by reliable means.

If provision is made for automatic transmission of fire signals to an alarm receiving centre, it is often quite simple to arrange for fault signals on the fire alarm system to be transmitted as a separately identifiable signal; this has the benefit of ensuring that faults on the fire alarm system receive attention when the premises are unoccupied.

 © BSI 15 October 2002

15.2 Recommendations

The following recommendations are applicable.

a) The user should ensure that there are suitable arrangements for summoning the fire service when the fire alarm system operates. The arrangements should be such as to minimize the risk to any person responsible for summoning the fire service. Systems that automatically transmit a pre-recorded message direct to the fire service, via the public emergency call system, should not be used.

b) In occupied buildings, the primary means of summoning the fire service should always comprise a call to the fire service by occupants, using the public emergency call system.

c) In any area specifically designated as that from which the fire service will be summoned in the event of fire, the fire alarm signal should not be so loud as to interfere with telephone speech.

NOTE 1 Cases have been reported in which the frequency of the alarm sounders has been such as to corrupt tone dialling systems, leading to failure of the emergency call.

d) The designer should determine from the purchaser or user whether automatic means of transmission of alarm signals to an alarm receiving centre is required by the user.

e) If the early summoning of the fire service is considered critical to the safety of occupants (e.g. on the basis of a fire risk assessment), facilities should be provided for automatic transmission of alarm signals to an alarm receiving centre, unless there are reliable arrangements for summoning the fire service by persons in the building.

f) Except in the case of continuously occupied premises, Category P systems should incorporate a means for automatic transmission of fire signals to an alarm receiving centre.

g) In non-domestic premises in multiple occupation, Category L systems should incorporate an automatic means for transmission of alarm signals to an alarm receiving centre, unless there are arrangements in place for summoning the fire service by occupants of the building, at all times that the premises are occupied (or partly occupied).

h) Any alarm receiving centre to which fire alarm signals are relayed should comply with the recommendations of BS 5979.

NOTE 2 Schemes exist for third party certification of alarm receiving centres to BS 5979.

i) If a Category L or Category P system incorporates facilities for automatic transmission of fire signals to an alarm receiving centre, any telephone switch room or frame room on which automatic transmission depends should be protected by automatic fire detection or an automatic fire extinguishing system. As far as reasonably practicable, any cables within the building (including telephone lines) on which communication depends should be:

1) routed through areas of low fire risk; or

2) routed through areas protected by automatic fire detection or an automatic fire extinguishing system; or

3) cables of standard or enhanced fire resistance (see Clause **26**).

j) Automatic transmission of alarm signals should not be prevented by the act of silencing fire alarm sounders, nor should it depend on the state of any silencing switch.

NOTE 3 Although any alarm receiving centre to which fire signals are relayed will normally be operated on a commercial basis, the function could, for example, be fulfilled by a fire service control room or a continuously manned security control room on the same site as the protected premises.

k) Where an alarm transmission device is mounted in an enclosure separate from that of the fire alarm control and indicating equipment (CIE), the connection from the CIE to the alarm transmission device should be monitored. The CIE should comply with BS EN 54-2.

l) Power supplies for any facility used for the transmission of fire alarm signals to an alarm receiving centre should comply with the recommendations of Clause **25**.

16 Audible alarm signals

16.1 Commentary

It is essential that alarm signals are sufficient in nature and extent to warn all persons for whom the alarm signals are intended. In simple buildings, the alarm produced by a Category M or Category L system needs to be capable of alerting all occupants of the building regardless of their location. If people sleep in the building, the alarm signal needs to be sufficient to rouse them from sleep.

*In certain, usually more complex, buildings, a general alarm of the type described above may not be appropriate. For example, in hospitals and certain residential care premises in which occupants might need assistance to evacuate, the fire alarm system might not be intended to rouse people from sleep, and it might only be necessary for staff to be aware of the alarm signal. In some large or complex buildings, the extent of the area in which an evacuation signal is given might be restricted, at least initially (see Clause **19**).*

In Category P systems, the alarm signal might not be intended to alert all occupants; it might be sufficient for the system to alert key personnel in order to ensure that fire-fighting action is taken. In practice, a Category P system is usually combined with a Category M system, in which case the considerations applicable to the Category M system take precedence as these will be more onerous.

In those areas in which audible alarm signals are intended to alert occupants, the sound pressure level and frequency of alarm signals must be adequate to provide unambiguous warning of fire. Particular care needs to be taken to ensure adequate sound pressure levels in small cellular spaces, such as cellular offices, toilets and plant rooms. If the alarm signal comprises a speech message, it is also necessary to ensure that the message(s) is intelligible.

Traditionally, a sound pressure level of 65 dB(A) has been regarded as the minimum acceptable sound pressure level for fire alarm signals. However, a sound pressure level difference of 2 to 3 dB is only just perceptible to the human ear. It is, therefore, considered unnecessary to install additional fire alarm sounders if, in open areas, 65 dB(A) is generally achieved. However, if, at specific points of limited extent within any area, a sound pressure level of at least 60 dB(A) is achieved this is considered acceptable. It is also considered acceptable for the sound pressure level to be as low as 60 dB(A) in small enclosed spaces, such as cellular offices, and in stairways.

In order to prevent excessive sound pressure levels, which can cause disorientation or even damage to hearing, a larger number of quieter sounders is preferable to a few very loud sounders.

Once started, alarm signals generally need to continue until manually silenced by use of a silencing control. In large sites comprising many buildings in single ownership (e.g. industrial sites), an external fire alarm device can be of value in directing fire-fighters to the correct building; an external fire alarm device can also be useful in directing fire-fighters to the correct entrance of a large building with many entrances. It is not necessary for an external fire alarm sounder to sound for a prolonged period; for it to do so is unlikely to be acceptable because of disturbance in neighbouring properties, particularly if false alarms occur when the protected premises are unoccupied.

In radio-linked systems, in which the power supply for sounders may comprise batteries, prolonged operation of sounders (e.g. as a result of a false alarm when the premises are unoccupied) can exhaust the batteries, leaving the premises without an operational fire alarm system when they are subsequently re-occupied. Since this creates greater risk than that associated with automatic silencing of alarm signals, the alarm signal may be automatically silenced in certain radio-linked systems, subject to the agreement of the enforcing authority.

 © BSI 15 October 2002

16.2 Recommendations

16.2.1 ***Recommendations applicable to Category M and L systems (other than in hospitals and residential care premises)***

The following recommendations are applicable.

a) The sound pressure level of alarm signals should be:

1) generally, throughout all accessible areas of the building [other than as described in **15.2**c) and in enclosures of less than 1 m^2], not less than 65 dB(A) but, as shown in Figure 4, this may be reduced to 60 dB(A) in:

— stairways;

— enclosures of no more than approximately 60 m^2 in area (e.g. cellular offices);

— specific points of limited extent.

2) where the sound pressure level of background noise is greater than 60 dB(A), the sound pressure level of the fire alarm signal should be 5 dB above the sound pressure level of the background noise;

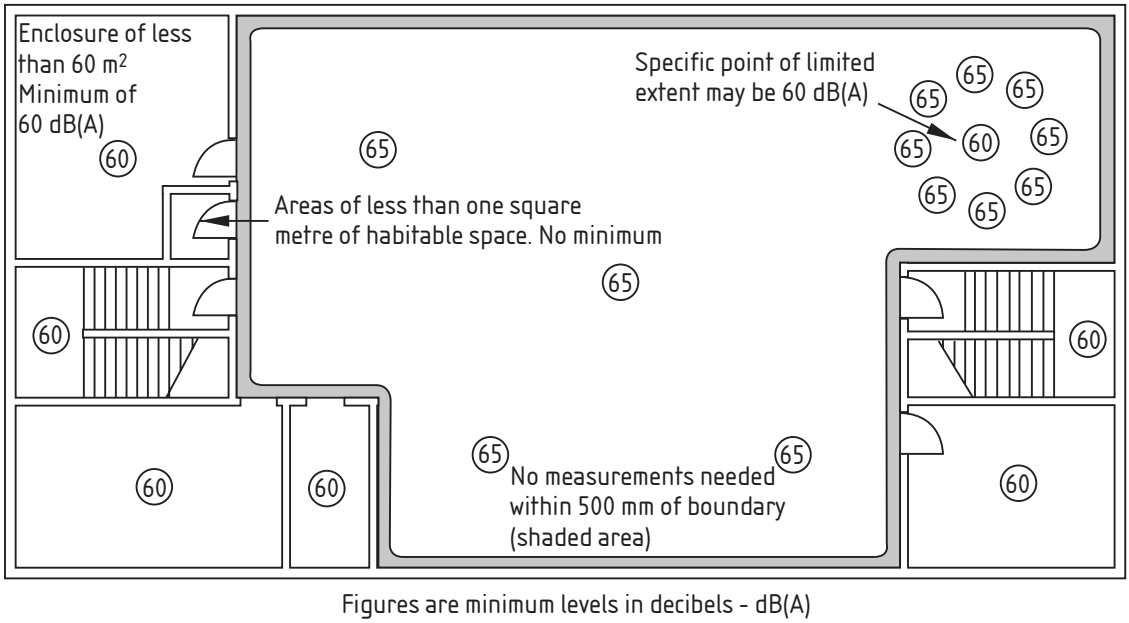

Figure 4 — Sound pressure levels [see **16.2.1**a)]

NOTE 1 Other background noise that is unlikely to persist for longer than 30 s may be ignored.

NOTE 2 This recommendation does not apply to noise created by running water in bathrooms and shower rooms.

NOTE 3 Typical noise levels in buildings are given in Annex B.

3) not less than 75 dB(A) at the bedhead within rooms in which the fire alarm system is intended to rouse people from sleep;

NOTE 4 Experience has shown that this normally necessitates the provision of a fire alarm sounder within the room in question.

4) Not greater than 120 dB(A) at any normally accessible point.

NOTE 5 All these figures are arbitrary, but are judged to be generally appropriate.

NOTE 6 In carrying out measurements to verify compliance with these recommendations, other than in the case of **16.2.1**a)3), account need not be taken of sound pressure levels within 500 mm of any walls or partitions.

NOTE 7 Measurements should be made with all doors shut.

NOTE 8 An instrument complying with BS EN 60651, set to slow response and A weighting, is suitable for measuring the sound pressure level of the alarm signal.

NOTE 9 It will often be necessary to measure the sound pressure level of the fire alarm signal in the presence of background noise. The sound pressure level of the fire alarm signal (in isolation) can be deemed to be 5 dB above background noise if, when the background noise is present, a sound pressure level increase of 6 dB occurs on operation of the fire alarm system.

b) The frequency(ies) produced by fire alarm sounders should lie in the range of 500 Hz to 1 000 Hz, unless the frequency of background noise is such as to mask these frequencies, in which case the use of sounder frequencies outside this range is acceptable. The sounders should produce a continuous output, although the frequency and amplitude may vary (e.g. as in a warbling note), to indicate the need for evacuation or other immediate response.

c) All fire alarm sounders within a building should have similar sound characteristics, unless particular conditions, such as an area of high background noise, makes this impracticable. The sounders should be distinctive in sound from the sounds of other alarm systems in the building. For example, a mixture of bells and electronic sounders should not be used in the same building as fire alarm devices. The fire alarm sounders should be distinctive in sound.

d) In premises designed for public entertainment, retail and similar premises, in which the sound pressure level of music is likely to be greater than 80 dB(A), the music should be muted automatically when a fire alarm signal is given.

NOTE 10 In premises with two (or more) stage alarm systems, consideration should be given to whether the music should be muted at the "Alert" or the "Evacuate" stage.

NOTE 11 Where the sound pressure level of the music is likely to be between 60 dB(A) and 80 dB(A), the recommendation of **16.2.1**a)2) applies.

e) In parts of a building with noisy machines, in order to achieve 5 dB(A) above background noise, the fire alarm sounders ("primary sounders") may be supplemented by mains powered sounders, without a standby supply ("secondary sounders"), operated from the same final circuit(s) as the noisy machines, so that failure of the supply to the secondary sounders also results in silencing of the noisy machines. The primary sounders should still be sufficient to satisfy the recommendations of **16.2.1**a)1) when the machines are silent.

f) In large sites with many buildings, or in the case of large buildings with many entrances, an external sounder(s) and/or visual alarm devices may be provided to direct fire-fighters to the building or appropriate entrance to the building. Where the provision of such sounders and/or visual alarm devices is considered, there should be consultation with the fire service to confirm the need of, or benefit from, their provision. The sounder(s) and/or visual alarm device(s) should be clearly marked with the words "FIRE ALARM".

g) A facility should be provided to enable silencing of alarm signals. The operation of the facility should:

1) require a manual operation;

2) cause an audible signal to be given at the control and indicating equipment;

3) not cancel any visual signal of the alarm at the control equipment;

4) sound any fire alarm sounders configured to that zone if, following silencing of fire alarm sounders, a new zone goes into alarm, and normally should also resound those fire alarm sounders which were previously sounding;

5) not prevent the correct operation of any control for starting or restarting the alarm sounders [see **23.2.3**b)];

6) not prevent the transmission of an alarm to an alarm receiving centre.

 © BSI 15 October 2002

h) Alarm signals should not silence automatically (i.e. after a pre-determined time period), other than in the circumstances below:

1) any external fire alarm sounders [see **16.2.1**f)] in Category L and P systems should silence automatically after 30 min, unless the premises are continuously occupied so enabling manual silencing by occupants. After silencing, the sounders may (or may not) restart if, before the system is reset, a further alarm condition occurs;

2) where a radio-linked Category L or P system incorporates battery powered fire alarm sounders, subject to agreement of the authority responsible for enforcing fire safety legislation, the sounders should silence automatically after 30 min, unless the premises are continuously occupied so enabling manual silencing by occupants. The sounders should restart if, before the system is reset, a further alarm condition occurs. Where a period longer than 30 min is required, e.g. for phased evacuation, the 30 min period may be extended to meet the requirements of the system specification;

3) in a two (or more) stage alarm system, alert signals may be silenced automatically after a pre-determined period, subject to compliance with the recommendations of **19.2.3**d).

i) The system should incorporate at least two fire alarm sounders, even if the recommended sound pressure levels could be achieved with one sounder. At least one sounder should be provided in each fire compartment.

j) If audible alarms comprise speech messages generated by a voice alarm system, the relevant recommendations of BS 5839-8 should be followed in respect of message content, sound pressure levels and speech intelligibility. If voice sounders (see **3.63**) are used, reference should be made to Annex E of BS 5839-8:1998, as well as complying with the recommendations of this standard.

k) Fire alarm sounders should not be used for purposes other than warning of fire, unless the response required is identical to that required in the event of fire (i.e. immediate evacuation by use of all escape routes). However, as an established exception, the fire alarm signal may be used in schools to indicate start or finish of pre-determined periods. The duration of such signals should not exceed five seconds.

16.2.2 ***Recommendations applicable to Category P systems***

The recommendations of **16.2.1** apply in respect of those areas where audible alarm signals are required.

16.2.3 ***Recommendations applicable to hospitals and residential care premises***

The following recommendations are applicable.

a) Audible alarms in hospitals should comply with the recommendations of the Department of Health publication HTM 82.

b) Audible alarms in residential care premises should comply with **16.2.1**, except that, if the alarm signal is not intended to rouse occupants of some or all rooms from sleep, **16.2.1**a)3) does not apply. Any relaxation of **16.2.1**a)3) should, however, be subject to the specific agreement of every authority responsible for enforcing fire safety legislation in the premises.

NOTE More than one authority may be responsible for enforcing relevant legislation in residential care premises (e.g. the fire authority and the social services department of the local authority).

17 Visual alarm signals

17.1 Commentary

*Visual alarm signals need to be used to supplement audible alarm signals in situations in which the latter are likely to be ineffective, but normally ought not be used on their own. Their use is principally in areas with high ambient sound levels, where hearing protection is likely to be worn. However, they are sometimes used, as the sole initial warning to staff, in situations in which the disturbance of an audible warning is undesirable (e.g. television and radio studios, cinemas, theatres and hospital operating theatres). Visual alarm signals may also be used as a means of giving warning of fire to people with impaired hearing (see Clause **18**).*

Where visual alarm signals are used, consideration may need to be given to the potential effects on photosensitive epileptics.

17.2 Recommendations

The following recommendations are applicable.

a) Visual alarm signals should be provided in areas where ambient noise levels exceed 90 dB(A) and in other areas where hearing protection is likely to be used under normal circumstances.

b) Visual alarm devices should be sufficient in number and distribution to be readily visible from all normally accessible locations, throughout the area in which they are provided, under normal ambient lighting levels.

c) The visual alarm signal should flash at a rate within the range of 30 to 130 flashes per minute.

d) The visual alarm signal should be clearly distinguishable from any other visual signal used in the premises.

NOTE The colour red is preferred.

e) The intensity of output of visual alarm devices should be sufficient to attract attention, but not so high as to cause difficulty with vision due to glare.

f) Visual alarms should be mounted at a minimum height of 2.1 m, but no closer to the ceiling than 150 mm.

18 Fire alarm warnings for people with impaired hearing

18.1 Commentary

Impairment of hearing does not mean that a person is completely insensitive to sound. Many people with severe impairment have sufficiently clear perception of some types of conventional audible alarm signals to require no special provision for warning of fire. There will be, in some situations, other people present who can alert those with impaired hearing to the need for evacuation, and in this case it might be necessary to put procedures in place that rely upon others to provide the necessary warning.

However, in circumstances, such as buildings with a significant number of people with impaired hearing, buildings in which one or more persons with impaired hearing work in relative isolation, and buildings in which one or more persons with impaired hearing tend to move around the building to a significant extent, additional means of giving warning to people with impaired hearing might be appropriate. If the occupants in question tend to be located for a large proportion of their time within a limited area of the building, visual alarm signals might be appropriate in that area (and associated toilets). If they sleep in the building, tactile devices, with or without associated visual alarm devices, might need to be considered. These devices, which may, for example, be placed under pillows or mattresses, may be wired into fire alarm device circuits or be triggered by radio signals.

Alarm devices for the hearing impaired may be fixed, movable or portable:

Fixed equipment is equipment fastened to a support or otherwise secured in a specific location, or equipment not provided with a carrying handle and having such a mass that it cannot easily be moved (e.g. a fire alarm system control panel screwed to the wall).

Moveable equipment is equipment which is not fixed equipment and which is not normally in operation while the location is changed (e.g. A local unit or controller which is placed on a table top and operates a vibrating pad in a bed).

 © BSI 15 October 2002

Portable equipment is equipment designed to be in operation while being carried. (e.g. radio pager). For the purposes of this clause, portable alarm devices are:

— intended for carrying by the hearing impaired;

— capable of giving visual and/or tactile signals;

— normally radio controlled but other methods are not excluded; and

— normally require control equipment for transmission of signals to the portable devices, interfaced to the fire detection and alarm control equipment;

No British Standard specifications for alarm devices for the hearing impaired are available at present in the UK. Nevertheless, wherever possible, the recommendations of this clause should be followed and any variations ought to be subject to a risk assessment to ensure that no hearing impaired person is exposed to undue risk.

It should be noted that all radio paging systems used with fire alarm systems need to be licensed with the Radiocommunications Agency. There are three types of licence currently available:

— the short range business paging (SRBP) licence which gives no protection from interference from other authorized or unauthorized users of the same radio frequency;

— the self select licence which offers some protection from interference by unauthorised use of the frequency;

— the manual frequency co-ordinated licence which ensures the elimination of interference from both authorized and unauthorized users of the assigned radio frequency.

18.2 Recommendations

18.2.1 *General*

The following recommendations are applicable.

a) Visual alarm signals provided for people with impaired hearing should comply with Clause **17**. The visual alarm devices should be regarded as fire alarm devices for the purpose of this standard and, for example, circuits serving the devices should be monitored and protected against fire accordingly.

b) Tactile alarm devices provided for people with impaired hearing may be fixed, moveable or portable. Fixed or moveable tactile devices should be regarded as fire alarm devices for the purpose of this standard and, for example, circuits serving the devices should be monitored and protected against fire accordingly.

c) The intensity of output of tactile alarm devices should be sufficient to attract attention.

d) Advice should be sought from the Radiocommunications Agency as to the conformity requirements for any tactile alarm system using radio signals.

18.2.2 *Portable alarm devices*

Portable alarm devices to supplement the primary means of giving an alarm of fire, if activated by radio signals, should comply with the following recommendations.

a) The alarm should be given at the portable alarm device within five seconds of the generation of the alarm signal at the fire detection and alarm control and indicating equipment.

b) The alarm signal emitted by the portable alarm device should continue for at least 60 s after reception of every alarm signal or until it is acknowledged at the alarm device. This emitted alarm signal may be intermittent.

c) In a fire condition the control equipment should continue transmitting the alarm signal to the portable alarm devices until the alarm is cancelled by a signal from the fire alarm control equipment. If the control equipment does not send the fire signal continuously, it is acceptable for the control equipment to send the alarm signal repeatedly at periods not exceeding 10 s.

d) Where the portable alarm device is also used for other purposes (e.g. general paging), the recipient should be able to tell the difference between a signal of fire and a signal for other purposes;

e) Where the portable alarm device is also used for other purposes (e.g. general paging), the fire signal should have priority over any other signal.

© BSI 15 October 2002

f) A failure of the interconnection (e.g. radio transmission) between the control and indicating equipment and the portable alarm device should be identified at the portable alarm device by a visual and tactile signal within five minutes of the failure.

g) Portable alarm devices may be operated from a single power source (e.g. battery). A low power source voltage should be identified at the portable alarm device by a visual and tactile signal.

h) If a portable alarm device is fitted with an off switch, or a switch disabling the alarm signal, the design of the switch should be such as to avoid inadvertent operation.

i) All faults identified at the control equipment for the portable alarm system should result, in, at least, a common fault warning at the fire detection and alarm system control and indicating equipment within 100 s of the fault being identified at the portable alarm control equipment.

19 Staged fire alarms

19.1 Commentary

In simple buildings of limited size, a single stage fire alarm arrangement is likely to be sufficient. In such a system, on operation of any manual call point or automatic fire detector, a single, common fire alarm signal is given throughout the premises as a signal to all occupants to evacuate immediately (i.e. there is a "single phase" evacuation).

In certain large and/or high rise buildings, a staged fire alarm arrangement might be more appropriate. In a staged fire alarm system, the initial warning of fire is given in a restricted area, or is restricted to key personnel, but can be extended in further stages to warn, ultimately, all occupants of the premises. The arrangement might apply regardless of whether the alarm is triggered by a manual call point or an automatic fire detector, or it might apply only to alarm signals triggered by automatic fire detectors.

There are various circumstances in which a staged fire alarm arrangement may be appropriate. These include, but are not restricted to, the following.

a) In certain large or high rise buildings, it might be desirable to evacuate first those areas closest to the fire and immediately above it; other areas are evacuated thereafter. A particular example of this arrangement, commonly used in high rise buildings, is known as phased evacuation; in this case, conventionally, the floor of fire origin, the floor immediately above (and, often, any below ground areas) are evacuated as a first phase. Thereafter, each subsequent phase involves evacuation of two floors at a time, until all floors are evacuated in a number of such phases. This arrangement enables the number and/or widths of stairways to be reduced; under these circumstances, it is important that no control is provided to evacuate the entire building in a single phase, as there will be insufficient stairway capacity for simultaneous evacuation of all occupants.

b) Phased evacuation is also sometimes used in other types of building, irrespective of whether there are reduced stairway capacities (e.g. leisure complexes, shopping centres and transportation terminals). In these cases, the initial phase of evacuation may be horizontal, into a place of relative safety within the building.

c) In hospitals, a system of "progressive horizontal evacuation" is used, in which patients closest to a fire are moved horizontally to an adjacent fire compartment. In a large hospital, further evacuation might, again, involve only horizontal movement, without the need for more difficult vertical evacuation.

d) To minimize disruption from false alarms, signals triggered by automatic fire detectors might be restricted in the first instance to staff, who investigate before any general evacuation signal is given; alternatively, the area of initial evacuation might be restricted in extent (see Section 3).

e) In certain public buildings, such as places of public entertainment, an initial warning of fire is sometimes restricted to staff in order to avoid incorrect reaction by members of the public; staff are then responsible for controlling the evacuation, often by use of a voice alarm system.

f) In a widely spread range of low rise buildings, such as an industrial complex, there might be no need for evacuation of occupants in one area of the complex, even in the event of a confirmed fire of limited size some considerable distance from those occupants.

 © BSI 15 October 2002

In all of the above cases, the evacuation strategy described will normally require the support of a staged alarm system, which is capable of giving two or more stages of alarm within any area. In a two stage alarm, the system may be capable of giving an "Alert" signal in those areas not immediately affected, as a warning of impending evacuation, and an "Evacuate" signal in those areas in which immediate evacuation is required. Another form of two stage alarm is one in which the initial alarm is restricted to staff, usually by means of paging or a coded voice alarm message (a "staff alarm"), with the subsequent stage taking the form of an "Evacuate" signal throughout all or part of the premises. In a three-stage alarm system, the system may be capable of giving a staff alarm, an "Alert" signal and an "Evacuate" signal.

*The purpose of the fire detection and alarm system is to support the required fire and evacuation procedures. Since various arrangements are possible, it is absolutely vital that, other than in small, simple buildings, the fire procedures and evacuation strategy are formulated before final design of the fire detection and alarm system is completed. The "cause and effect" logic of the system, the control facilities provided and the configuration of fire alarm device circuits will be governed by the procedures the system is intended to support. For example, to facilitate a staged alarm arrangement in which "Alert" and "Evacuate" signals can be given, it will be necessary to divide the building into alarm zones (see Clause **14**).*

The use of staged alarm systems can necessitate the provision of additional facilities, such as a voice alarm system and/or an emergency voice communication system to control evacuation. Recommendations for the design of voice alarm systems are given in BS 5839-8. Recommendations for the design of emergency voice communication systems are given in BS 5839-9.

19.2 Recommendations

19.2.1 *Recommendations applicable to all staged alarm systems*

The following recommendations are applicable.

a) Where a staged alarm system is proposed, there should be early consultation with all relevant enforcing authorities.

b) In multi-storey buildings with phased evacuation, if stairway capacity is inadequate to support a simultaneous evacuation of all floors, no single control should cause an "Evacuate" signal to be given throughout the building; a separate "Evacuate" control should be provided for each alarm zone.

NOTE In some buildings, a two phase evacuation arrangement is used; the area of fire origin is evacuated first and the remainder of the building is evacuated simultaneously as a second phase. **19.2.1**b) does not apply to such situations, as adequate stairway capacity exists to evacuate the entire building in one phase.

19.2.2 *Recommendations applicable to staff alarms*

The following recommendations are applicable.

a) Staff alarms should be used only where staff, including any night staff, are sufficient in number and fully trained in the action they are to take in the event of fire.

b) Staff alarms should normally be generated only in response to signals from automatic fire detectors, but not in response to signals from manual call points. Any proposal to use a staff alarm as the initial response to a signal from a manual call point should be subject to special consideration and agreement by all relevant enforcing authorities. In such special circumstances, there should be adequate arrangements to ensure that a person operating a manual call point is not left in doubt as to the success of the operation (e.g. by means of visual indication at the call point that the signal has been correctly received at the control equipment and a suitable warning that operation of the manual call point will not result in an immediate audible fire warning).

NOTE 1 It is common practice for both manual call points and automatic detectors in large places of public entertainment to initiate only a staff alarm, so that staff can be prepared to assist in an orderly evacuation, which is then initiated by a voice alarm message. Such arrangements necessitate a high level of training and awareness on the part of staff, and might not be appropriate in other premises.

c) Staff alarm signals comprising visual fire alarm devices should comply with the recommendations of Clause **17**.

d) In premises with a staff alarm system, there should always be provision, throughout all areas of the building, for sounding an audible fire warning complying with Clause **16**. Facilities should be provided at the control and indicating equipment, and at additional locations if appropriate, to change the stage of alarm from a staff alarm stage to an "Evacuate" stage. Since operation of a manual call point should not normally result in a staff alarm [see **19.2.2**b)], it should normally also be possible for those responding to a staff alarm signal to change the stage of the alarm by operation of a manual call point.

NOTE 2 It is common for a staff alarm to be changed automatically to an audible alarm if a second automatic fire detector operates. This is commonly referred to as coincidence operation.

e) A staff alarm signal should automatically change to an audible fire warning in at least the relevant alarm zone after a pre-set period, unless manual intervention to stop the associated timer occurs at the control equipment. The period should be agreed with all relevant enforcing authorities, but should be sufficient to enable staff to investigate the initial alarm signal; the period should not normally exceed six minutes.

19.2.3 ***Recommendations applicable to audible "Alert" signals***

The following recommendations are applicable.

a) The audible alert signal should be intermittent (1 ± 0.5) s on and (1 ± 0.5) s off.

b) Signals from different fire alarm devices should be synchronized.

NOTE 1 Synchronization should be sufficient to ensure that the "Alert" signal cannot be confused with a continuous "Evacuate" signal.

c) Provision should be made for manually changing the "Alert" signal to the "Evacuation" signal in any area.

NOTE 2 Provision may also be made for automatically changing from the "Alert" signal to the "Evacuate" signal.

d) Provision may be made for the "Alert" signal to cease automatically after 30 s, provided that, at periods not exceeding three minutes, the signal is restored for a period of at least 10 s until it is manually silenced.

20 Manual call points

20.1 Commentary

Manual call points need to be prominently sited, readily distinguishable from non-fire alarm call points and need to be distributed such that, from any point in the building, it is impossible to leave the storey or the building without passing a manual call point.

Sufficient call points need to be provided to minimize, to a reasonable extent, the delay between discovery of a fire and the sounding of the alarm. Where the fire hazard level is high and rapid fire development is anticipated, this delay needs to be commensurately shorter.

Manual call points can, if present in unsupervised areas, be subject to malicious operation. For this reason, they are not normally provided in, for example, public common areas of shopping complexes and certain public houses. In public car parks within a building, use of an emergency voice communication system could be considered instead of manual call points.

20.2 Recommendations

The following recommendations are applicable.

a) The method of operation of all manual call points in a system should be that of type A as specified in BS EN 54-11. All call points should be identical unless there is a special reason for differentiation.

NOTE 1 The Type A manual call point is defined in BS EN 54-11 as follows:

"Type A Direct operation. A manual call point in which the change to the alarm condition is automatic (i.e. without the need for further manual action) when the frangible element is broken or displaced."

b) The delay between operation of a manual call point and the giving of an "Evacuate" signal in, at least, the alarm zone within which the call point is located should not exceed three seconds.

NOTE 2 BS EN 54-2 permits a delay of up to 10 s, in the response of control equipment; accordingly, a delay of 10 s may be acceptable, subject to the agreement of the relevant enforcing authority and the recording of the delay as a variation on the completion certificate.

 © BSI 15 October 2002

c) Manual call points should be located on escape routes and, in particular, at all storey exits and all exits to open air (whether or not the exits are specifically designated as fire exits).

Those located at storey exits may be sited within the accommodation or on the landing of a stairway to which the storey exit gives access (see Figure 5). In multi-storey buildings with phased evacuation, in which only a limited number of floors are evacuated at one time, only the former option applies; under these circumstances, manual call points should not be located on stairway landings, as persons travelling down the stairway might operate a manual call point several floors below that on which a fire is located, resulting in evacuation of inappropriate areas.

d) Distribution of manual call points should be such that no one need travel more than 45 m [except where **20.2**e) applies] to reach the nearest manual call point, measured along the route that a person would actually follow taking into account the layout of walls, partitions and fittings. If, at the design stage, the final layout of the premises is unknown, the maximum straight line distance between any point in the building and the nearest manual call point should not exceed 30 m [except where **20.2**e) applies]; after final fit out of the premises, the limit of 45 m should still then apply.

NOTE 3 These distances are arbitrary, but reflect the maximum acceptable distances between any point and the nearest storey exit commonly applied to many premises.

e) The figures of 45 m and 30 m quoted in d) should be reduced to 25 m and 16 m respectively in the following circumstances:

1) where a significant proportion of occupants have limited mobility and it can reasonably be anticipated that one of these occupants will be the appropriate person to first operate the fire alarm system in the event of fire; or

2) where processes in the area result in the likelihood of rapid fire development (e.g. where there is use, or processing, of highly flammable liquids or flammable gases).

f) Where specific equipment or activities result in a high fire hazard level (e.g. kitchens or cellulose paint spraying), a manual call point should be sited in close proximity.

NOTE 4 In both examples given above other considerations also apply. Kitchens or food preparation areas may require the use of a non-glass frangible element to avoid the possibility of food contamination with glass fragments. The spraying area might require the use of equipment certified for use in potentially explosive atmospheres (see Clause **10**). Manual call points with non-glass frangible elements should comply with the requirements of BS EN 54-11.

g) In buildings with phased evacuation, additional manual call points are necessary to ensure that a manual call point is located at every designated exit from an alarm zone.

h) Manual call points should be fixed at a height of 1.4 m above finished floor level, at easily accessible, well-illuminated and conspicuous positions free from potential obstruction. They should be sited against a contrasting background to assist in easy recognition. A lower mounting height is acceptable in circumstances where there is a high likelihood that the first person to raise an alarm of fire will be a wheelchair user.

NOTE 4 The figure of 1.4 m is arbitrary, but reflects long established custom and practice. A minor difference (e.g. less than 200 mm) in mounting height (e.g. to align with the mounting height of light switches) need not be regarded as significant, nor need it be recorded as a variation.

i) Manual call points may be flush mounted in locations where they will be seen readily but, where they will be viewed from the side (e.g. corridors), they should be surface mounted or only semi-recessed with the front face proud of the mounting surface by no less than 15mm.

j) In areas where manual call points are likely to be subject to casual, malicious operation, it may be acceptable, subject to the agreement of the relevant enforcing authority, for a transparent, hinged cover to be fitted to the manual call points. Operation of this two-action manual call point then involves lifting the cover and operating the manual call point in the normal manner.

Provision of a manual call point with a hinged cover should be recorded as a variation.

k) In public car parks, any use of an emergency voice communication system in lieu of manual call points should be subject to approval by the relevant enforcing authority, and the system should comply with the recommendations of BS 5839-9. All outstations should be Type B outstations as defined in BS 5839-9. The master station should be sited in a permanently manned location, such as a control room.

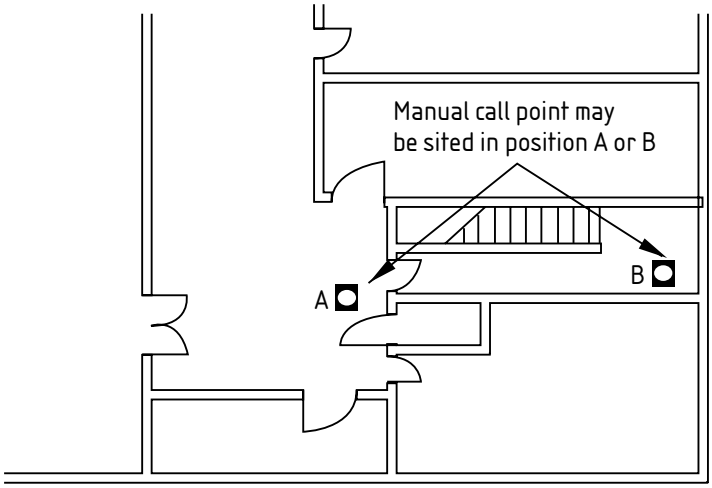

Figure 5 — Manual call points on escape routes [see **20.2**c)]

21 Types of fire detector and their selection

21.1 Commentary

21.1.1 *General*

Fire detectors are designed to detect one or more of the four characteristics of fire, namely:

— *heat;*

— *smoke;*

— *combustion gas (such as carbon monoxide);*

— *infra-red or ultraviolet radiation.*

In some fire detection systems, a fire signal is initiated when the characteristic reaches a pre-determined threshold. A signal may, instead or in addition, be initiated when the rate-of-change of the characteristic is representative of a fire.

In the case of point detectors, the characteristic is detected at a defined point(s) within the protected area. In contrast "line" detectors are capable of detecting the characteristic along a defined line within the protected space. In an "integrating line detector", the effect of the characteristic on the detector is integrated along the line. In a "non-integrating line detector", this is not the case, and the detector behaves, effectively, as though it comprised an infinite number of point detectors arranged along a line.

In multi-sensor fire detectors, each detector contains more than one sensor and thus monitors more than one of the characteristic fire phenomena (e.g. heat and smoke). By analysis of the signals received from the sensors, potential response to phenomena other than fire can be reduced while still providing an adequate response to fire.

21.1.2 *Heat detectors*

Heat detectors may take the form of either point type detectors or line type detectors. The detection system may be designed to respond when a fixed temperature is reached. The heat detector may also include a sensor that responds to the rate of rise of temperature. In this case the detector responds when either the temperature rises at more than a certain rate, or when the fixed temperature is reached.

Heat detectors complying with BS EN 54-5 operate in the manner described above. Heat detectors that operate only when the rate of rise of temperature is abnormal, but not when a fixed temperature is reached, do not comply with BS EN 54-5 and ought not to be used; they can fail to detect a slowly developing fire.

 © BSI 15 October 2002

21.1.3 ***Smoke detectors***

Point smoke detectors utilize one (or both) of two principles:

— ionization chamber smoke detectors detect smoke by the reduction it causes in the current that flows between electrodes in an ionization chamber within the detector;

— optical smoke detectors detect smoke by means of the light scatter that results from the presence of a small light source within the detector.

Optical beam smoke detectors are effectively line type smoke detectors. They comprise a light source (usually operating at infra-red frequencies) and a receiver. The two are either separated or housed within a single unit, in which case reflectors are used to reflect light from the transmitter back to the associated receiver. Optical beam detectors operate by detecting the obscuration of the light source that occurs in the presence of smoke. Some optical beam detectors can also detect heat by means of the variation in the refractive index of light ("shimmer effect") that occurs at turbulent interfaces between hot and cold air.

In an aspirating smoke detection system, air samples are drawn, by a pump or fan, through sampling points (holes in the pipework) within the protected area, to a central detector. The detector can operate on ionization chamber or optical principles. The amount of air entering each sampling point is usually small, and should not be considered as modifying air or smoke flows within the protected space. In general, each sampling point may be considered as a separate point type smoke detector provided that a single sampling point has equivalent sensitivity to a point type smoke detector.

Smoke may also be detected by video techniques, in which closed circuit television cameras monitor the protected space; the signals from each camera are analysed electronically to detect the presence of smoke by the obscuration of part of the camera's field of view that it creates. Detection therefore relies on illumination of the field of view by normal lighting or specially installed infra-red light sources. Such systems are still in their infancy at the time of publication of this standard. They are used for special applications and require specialist design.

21.1.4 ***Combustion gas detectors***

Combustion gas detectors are point-type detectors that respond to one (or more) of the gases produced by a fire. For example, carbon monoxide is produced when incomplete combustion occurs as a result of restriction of the amount of oxygen available to support the combustion process.

Carbon monoxide can spread by diffusion through certain forms of construction. In the event of fire, therefore, carbon monoxide detectors could operate at a considerable distance from the fire, and on floors other than the floor of fire origin. Care needs to be taken to ensure that this does not result in misleading information for fire-fighters or others responding to a fire signal.

Electrochemical sensors within combustion gas detectors have a finite life, after which replacement is necessary. It is important that the user is made aware of the likely lifetime of any combustion gas detector used within a fire detection and alarm system.

21.1.5 ***Flame detectors***

Flame detectors detect the infra-red and/or ultraviolet radiation that is emitted by flame. Both types use radiation-sensitive cells that "see" the fire either directly or through built-in lenses or reflectors.

Infra-red flame detectors are usually designed to respond to flame characteristics such as flicker, size or more than one specific radiation frequency. Types intended for outdoor use can be designed to respond to specific infra-red frequency bands that are not characteristic of solar radiation.

Ultraviolet flame detectors normally operate within wavelengths that the ozone layer filters out of solar radiation. Hence, ultraviolet detectors do not normally respond to sunlight and may generally be used outdoors.

21.1.6 ***Multi-sensor fire detectors***

In a fire detection system incorporating multi-sensor detectors each multi-sensor fire detector contains more than one sensor, each of which responds to a different physical and/or chemical characteristic of fire. The purpose of combining sensors in this way is to enhance the performance of the system in detection of fire, or its resistance to at least certain categories of false alarm, or both.

The method (if any) of combining the signals from each sensor varies between different proprietary multi-sensor fire detection systems. In some such systems, there is significant potential for reduction of many types of false alarm.

With some multi-sensor fire detectors it is possible to disable an individual detection sensor. This might be used in a time related system to reduce false alarms (see ***35.2.7.1****). For example, with a heat and optical multi-sensor detector the optical sensor might be disabled during the day. If this is the case, it is vital that the detectors are spaced for the least sensitive sensor, in this case, heat.*

21.1.7 ***Choice of fire detection principle***

No one type of detector is the most suitable for all applications. Final choice will depend primarily on:

— the speed of response required (to satisfy the fire safety objective);

— the need to minimize false alarms;

— the nature of the fire hazard.

However, other factors, such as cost, suitability for the environment and maintenance requirements might need to be considered. In some circumstances, a mixture of different types of detector may be appropriate to optimize speed of detection or to minimize false alarms.

All fire detectors will respond to some extent to phenomena other than fire. Measures to minimize such false alarms and their effects are described in Section 3.

Heat detectors are generally less sensitive to most fires than all other types of fire detector, but can detect certain very clean burning fires, such as those involving certain flammable liquids (e.g. alcohol) before a smoke or combustion gas detector. They are unlikely to respond to smouldering fires, and, as a simple rule of thumb, will require the flames from a fire to reach about one-third of the distance to the ceiling before they will operate.

In view of their lack of sensitivity, heat detectors are not suitable for the protection of areas where warning of the presence of smoke is required or where a small fire would cause unacceptable damage.

On the other hand, heat detectors generally have a greater resistance to environmental conditions than other types of detector. Accordingly, in most situations, they have the greatest immunity to false alarms. In addition, they generally require only the minimum of routine attention during system maintenance.

Ionization chamber smoke detectors are particularly sensitive to smoke containing small particles, such as are produced in rapidly burning flaming fires, but may be less sensitive to the larger particles found in optically dense smoke of similar mass, such as can result from smouldering fires, including those involving polyurethane foam, or overheated PVC.

Optical smoke detectors are sensitive to optically dense smoke, but are less sensitive to the small particles found in clean-burning fires that produce little visible smoke. Detectors that operate on the principle of light scatter are more sensitive to light coloured smoke; very dark smoke, by definition, absorbs light rather than scatters it, but will be readily detected by a smoke detector that operates on the principle of obscuration (e.g. an optical beam type detector).

One of the hazards on escape routes and stairways is visible smoke, which might obscure the visibility of the route and of exit signs. Optical smoke detectors are therefore well suited for use in escape routes because they detect visible smoke and might operate before the escape route becomes impassable.

Both optical and ionization chamber smoke detectors complying with BS EN 54-7 have a sufficiently wide range of response to be suitable for most applications in which a smoke detector is appropriate. In some premises, however, there may be specific risks for which one type is more suitable, either in respect of sensitivity to the type of fire that is anticipated or resistance to false alarms (see Section 3). In specific circumstances, it might be advisable to install point smoke detectors having a higher or lower sensitivity, possibly in conjunction with a time dependent system. Specialist application guidance should be sought from the manufacturer.

 © BSI 15 October 2002

Optical beam smoke detectors can prove economical and effective for the protection of large, open plan spaces with relatively high ceilings (e.g. warehouses), particularly if access to point smoke detectors for maintenance could present practical difficulties. It is, however, essential that they be mounted to solid construction that is unlikely to "flex" as a result of changes in temperature or imposed load, as this can cause mis-alignment of the optical beam and, hence, fault signals or false alarms. The band of sensitivities of optical beam smoke detectors complying with BS EN 54-12 is defined by an absolute maximum sensitivity (corresponding to an obscuration in the near infra-red of 0.4 dB) and a minimum sensitivity that is defined by the ability to pass fire tests TF2 to TF5 (typically 5 dB). In specific circumstances, it might be advisable to install optical beam smoke detectors having a higher or lower sensitivity. Specialist application guidance should be sought from the manufacturer.

Conventional smoke detection systems cannot detect the products from clean-burning fires (such as burning alcohol), which do not produce smoke particles. This is not usually a serious disadvantage because a fire will normally involve other combustibles at an early stage. A fire that involves only a material that burns without the production of smoke can, however, be detected by optical beam smoke detectors that incorporate thermal turbulence detection. Some multi-sensor fire detectors will also respond to fires which do not produce smoke particles.

In general, smoke detectors give appreciably faster response to most fires than heat detectors, but are more likely to give false alarms (see Section 3). Where there are production or other processes that produce smoke, fumes, dust, etc., which might operate smoke detectors, an alternative type of fire detector needs to be used.

Aspirating smoke detection systems commonly incorporate a detector of much higher sensitivity than point or optical beam smoke detectors. Such "high sensitivity aspirating detection systems", are often used to protect critical electronic equipment rooms, in which even a very small fire can result in unacceptable damage. Guidance on fire protection of such facilities is given in BS 6266.

Aspirating smoke detection systems are also used, sometimes, to protect spaces in which point type smoke detectors would present difficulties on the basis of:

— aesthetics (aspirating pipework might be run in floor voids, with a capillary tube sampling air from the space below via a small hole drilled in the ceiling);

— height of the space (the high sensitivity of some aspirating systems, coupled with the possibility of running pipework vertically on walls and storage racks, can provide enhanced protection compared with point smoke detectors mounted at high level);

— temperature of the space (e.g. in cold stores, the detector can be located outside the space, so that it is not directly exposed to low temperatures).

For aspirating systems, specialist application guidance needs to be sought from the manufacturer.

Where the principal gas to which a combustion gas detector responds is carbon monoxide, the detector will be most sensitive to smouldering fires and fires in which the rate of burning is controlled by the supply of air. Such detectors can be relatively insensitive to free burning fires supported by a plentiful supply of oxygen.

Carbon monoxide detectors can be immune to certain environmental influences that can result in false alarms from certain smoke detection systems, such as dust, steam and cigarette smoke, while responding to many types of fire appreciably faster than heat detectors.

Because of their inability to detect smouldering fires and their relatively high cost, flame detectors ought not to be considered as general purpose detectors, and are normally used for specialized applications, such as detection of fires in plants handling or storing highly flammable liquids or gases.

Infra-red flame detectors are sometimes used to protect very high spaces, such as cathedrals or atria. The detectors do not need to be ceiling mounted; they can be mounted at relatively low levels on walls around a very high protected space, within which only a very large fire could be detected by ceiling mounted heat or smoke detectors. Ultraviolet flame detectors are not generally suitable for this application, since ultraviolet radiation is greatly attenuated by smoke whereas infra-red radiation penetrates smoke well.

While achievement of the fire safety objective (e.g. warning occupants of fire before escape routes are impassable) always needs to take precedence, avoidance of false alarms needs to be given similar weight in consideration of the detection principle by the designer at the design stage. A high level of false alarms is not merely disruptive to occupants and business activities; it can result in failure to achieve the fire safety objective as a result of disablement of part, or all, of the system, or of inappropriate response of occupants to fire signals.

Choice of fire detection principle therefore needs to take into account:

— the speed of fire detection required, based on an assessment of fire risk;

— the nature and quantity of the combustible materials present, including ease of ignition, heat release rate, likely form of combustion (e.g. smouldering or flaming) and propensity for smoke production;

— probable rate of fire growth and spread;

— the nature of the environment (e.g. humidity, temperature, cleanliness, extent of pollutants and nature of work processes);

— the proposed fire evacuation strategy;

— the height and geometry of the protected area;

— the attendance time of the fire service (particularly in the case of Category P systems);

— other active and passive fire protection measures present;

— the susceptibility of contents to heat, smoke and water;

— the speed of response to fire, and the probable false alarm rates, of different types of fire detector.

In general, in a slow smouldering fire, a smoke or combustion gas detector will operate before a heat detector. A fire that evolves heat and flame rapidly and with very little smoke could operate a heat or flame detector before a smoke or combustion gas detector. With a flammable liquid fire, a flame detector could operate first. Where speed of response is important in an environment in which false alarms might result from the type of fire detection that is desirable, multi-sensor fire detectors or a system incorporating coincidence detection can enable early detection of fire without an unacceptable rate of false alarms.

While the fastest achievable response to fire is desirable, it might not always be necessary, given the objective of the system, the other fire protection measures present, the likely nature of a fire and the potential for fire spread; nor is it desirable if the result is an unacceptable rate of false alarms.

If, for example, there were a requirement to protect a transformer chamber in a dirty environment, consideration would need to be given to the reason for the protection. If the reason were concern regarding the hazard that the oil filled transformer created to adjacent areas, from which it were separated by substantial fire-resisting construction, heat detection might be appropriate. A fire involving the flammable oil would be detected quite quickly and well before the integrity of the fire-resisting construction was threatened. Even if earlier warning could be given by smoke detection, the increased potential for false alarms and increased maintenance burden might not be warranted. If, alternatively, the reason for the protection were to protect the transformer, on which a high revenue earning process depended, from a fire in cables within the enclosure, smoke detection might be necessary.

Similarly, it is acceptable, in a Category L2 or L3 system within a building in which people sleep, to install heat detectors in bedrooms. The objective of these detectors is not to provide the earliest possible warning to occupants of a bedroom in which fire starts, but to warn other occupants before the integrity of the door of the bedroom is threatened by fire.

Earlier warning would be given by smoke detectors, and might be desirable in, for example, rooms occupied by disabled people, but at an increased risk of false alarms. Earlier warning with a lesser increase in the risk of false alarms might be given by carbon monoxide detectors or by a multi-sensor fire detection system.

*In order to ensure that the objectives of the system are satisfied without an unnecessary level of false alarms, early consultation between the interested parties is desirable (see Clause **6**). An assessment of the fire risk would be included in this consultation.*

 © BSI 15 October 2002

21.1.8 ***Recommendations***

The following recommendations are applicable.

a) The type(s) of fire detector used in a system should provide adequate protection of occupants, property or both, as appropriate to the Category of system, while minimizing the risk of false alarms as far as practicable (see Section 3). In case of doubt, there should be early consultation between all interested parties (see Clause **6**). Maintenance requirements for different types of detector should also be taken into consideration, along with any special requirements of the user (e.g. regarding the impact of the fire detection system on aesthetics).

b) Heat detectors may be used in any area, other than the following:

1) areas of a Category P system in which a small fire (including any form of smouldering fire) has the potential to cause unacceptable damage;

NOTE 1 Products of combustion may be corrosive and cause considerable damage without burning the contents of the affected area.

2) escape routes in Category L systems (but heat detectors may be used in other areas, including rooms that open onto escape routes);

3) areas in which the production of smoke could present a threat to occupants' escape before it is likely to be detected by people or heat detection.

NOTE 2 It is generally accepted that occupants in a room of fire origin are likely to be aware of a fire before it is detected by any form of fire detector, unless they are asleep. Even if occupants are asleep, the risk to occupants of typically sized bedrooms might not be such as to warrant smoke detection within the bedrooms, except in the case of dormitory accommodation or rooms intended for mobility-impaired disabled people who require additional time to escape from a fire in their bedroom.

4) Areas in which heat detectors would have a high potential for false alarms (see Section 3).

c) Smoke detectors may be used in any area, other than the following:

1) areas in which the principal fire hazard is the presence of flammable liquids or gases that produce little smoke when involved in a fire;

NOTE 3 If fire is likely to involve carbonaceous materials, such as wood, paper, textiles, etc. in the early stages, smoke detection might be suitable.

2) areas in which smoke detectors would have a high potential for false alarms (see Section 3), unless the risk from fire warrants the provision of automatic fire detection and the use of other forms of fire detection is precluded on the basis of their speed of response to fires of the type that might be anticipated;

NOTE 4 This does not imply that a high rate of false alarms is ever acceptable; methods, such as filtering, might be necessary to avoid an unacceptable rate of evacuation signals and calls to the fire service (see Section 3).

NOTE 5 In these circumstances, fire detection systems incorporating multi-sensor detectors that include smoke sensors within each relevant detector might be suitable.

NOTE 6 Use of an optical smoke detector instead of an ionization chamber smoke detector (or vice versa) can change considerably the potential for false alarms (see Section 3).

d) In Category L systems, smoke detectors installed within corridors and stairways that form part of the means of escape should be of the optical type, unless the use of optical detectors would significantly increase the rate of false alarms (see Section 3).

e) In areas in which early detection of a smouldering fire is required, optical smoke detectors, optical beam detectors, carbon monoxide fire detectors or suitable multi-sensor fire detectors should be used.

f) In areas in which early detection of a relatively fast and clean burning flaming fire is required, ionization chamber smoke detectors, suitable multi-sensor fire detection systems or flame detectors should be used; suitably sensitive heat detectors may also be considered.

© BSI 15 October 2002

g) Carbon monoxide fire detectors may be used to protect any of the following areas:

1) any area in which the use of a heat detector would be acceptable, other than areas in which the principal fire hazard comprises flammable liquids that, when ignited, result in a rapid, flaming fire;

2) rooms opening onto escape routes in a Category L3 system;

NOTE 7 Use of carbon monoxide fire detectors in bedrooms will provide a higher standard of protection of sleeping occupants than heat detectors, but the potential for false alarms will be less than in the case of smoke detectors.

3) all escape routes within Category L3 or L4 systems, provided carbon monoxide detectors are used in conjunction with smoke detectors. Specialist application guidance should be sought from the manufacturer;

4) any other area in which the fire hazard (e.g. the nature of the combustible materials, the type of fire that could be expected and the amount of ventilation) is of such a nature that there is test evidence to demonstrate that the carbon monoxide detectors proposed would offer adequate fire protection.

h) Flame detectors should only be used in situations in which it is sufficient for the fire detection system to respond to flaming fires, but not fires that produce smoke without significant flame (e.g. smouldering fires). For flame detectors to be effective, they should have a clear line-of-sight to the area being protected.

i) Ultraviolet flame detectors should not be used as the sole means of fire detection in areas within buildings in which a fire can produce significant quantities of smoke before flaming occurs.

j) Video smoke detection systems should be capable of detecting smoke reliably in the absence of the normal lighting in the building and the absence of a mains power supply to any lighting provided specifically to aid the detection of smoke.

22 Spacing and siting of automatic fire detectors

22.1 Commentary

Heat and smoke detectors depend on convection to transport hot gases and smoke from the fire to the detector. Spacing and siting of these detectors needs to be based on the need to restrict the time taken for this movement and to ensure that the products of combustion reach the detector in adequate concentration. In a building, the hottest gas and the greatest concentration of smoke will generally form at the highest parts of the enclosed areas, and it is here, therefore, that heat or smoke detectors need to be sited.

As the smoke and hot gases from a fire rise, they become diluted with clean, cool air, which is drawn into the plume. Hence, the size of fire required in order to operate heat or smoke detectors increases rapidly as the height of the ceiling above the fire increases. To some extent, this effect can be countered by the use of more sensitive detectors. Optical beam detectors are less sensitive to the effects of ceiling height than are point-type detectors, since the increased size of plume will involve a greater proportion of the path length of the optical beam and help to alleviate the effects of reduced smoke density.

In addition, the entrainment of air cools the gases. If the ceiling is high and the ambient temperature in the uppermost areas within the protected space is high, the plume of smoke and hot gases may reach ambient temperature before reaching the ceiling. If the temperature of the surrounding air increases with height (e.g. as a result of solar gain), it is possible for the air at the uppermost levels to be at a higher temperature than that of the plume. The plume will then spread out to form a smoke layer before it reaches the ceiling, as though there were an "invisible ceiling" at a specific height within the protected space. This is known as stratification, and, at this stage of the fire growth, the smoke and hot gases will not operate ceiling mounted detectors, regardless of their sensitivity.

It is usually difficult to predict with any degree of certainty the level at which stratification occurs; this will depend on the convective heat output of the fire and the temperature profile within the protected space at the time of the fire, neither of which are accurately known quantities. If detectors are mounted at an expected stratification level, and stratification does not occur or occurs at a higher level, detection might be dangerously delayed, as the relatively narrow plume can "by-pass" the detectors. Ultimately, as the fire grows and releases more heat, the plume will break through the thermal barrier and ceiling mounted detectors will operate, albeit at a later stage of the fire than if no stratification had occurred. (However, a larger fire can normally be "tolerated" if the ceiling height is greater.) Thus, although, in a high space in which stratification is likely, supplementary detection may be provided at lower levels in the hope of detecting the stratified layer, ceiling mounted detectors always need to be used. As the plume of hot gas is relatively narrow, the radius of coverage of the supplementary detection needs to be reduced.

 © BSI 15 October 2002

Flame detectors do not rely on convection, but detect the radiation emitted from flame. Accordingly, they do not need to be mounted on ceilings, and they are not, in any case, affected by stratification. Their sensitivity to a fire does decrease, however, as their distance from the fire increases, as the intensity of the radiation decreases approximately in proportion to the square of the distance from its source. On the one hand, they may be mounted at relatively low level within a high space to maximize sensitivity to a fire at ground level; on the other hand, since they depend on a clear line-of-sight to the fire, mounting at too low a height can preclude early detection of a shielded fire.

Although an increased ceiling height generally means that a fire will be larger when it is first detected by ceiling mounted detectors, the ultimate damage caused to property will also depend on the delay between detection and the start of fire-fighting by professional fire-fighters (whether from the local authority fire service or a private fire service). If this delay is small, then the increase in fire size at the point of detection can be acceptable in a Category P system.

Although, for general protection of any space, the above considerations apply, localized "spot" protection may be provided by additional fire detectors. For example, line-type heat detection systems might be particularly suitable for protecting items of plant or cabling. When used for these purposes, the detector needs to be mounted as close as possible to the place where fire or overheating might occur, and either mounted above the item to be protected or in thermal contact with it.

The effectiveness of an automatic fire detection system will be affected by obstructions between heat or smoke detectors and the products of combustion. It is important that heat and smoke detectors are not mounted too close to obstructions to the flow of hot gases and smoke towards the detector and that radiation from flame is not obscured from flame detectors. At the junction of a wall and a ceiling, there is a "dead space", within which heat or smoke detection would not be adequately effective. The effect on detection efficiency might be less in the case of carbon monoxide detection, since transport of carbon monoxide to the detector is assisted by diffusion.

Similarly, as the hot gases and smoke flow horizontally across a ceiling, there is a stagnant boundary layer at the surface of the ceiling; this precludes the sensitive element of a heat or smoke detector from being mounted flush with a ceiling. This restriction needs to be taken into account in the case of the sampling points of an aspirating smoke detection system.

In siting heat, smoke and combustion gas detectors, consideration needs to be given to the possible pattern of air movement in the premises. Air conditioning and ventilation systems with high air change rates may adversely affect the response of detectors by drawing fresh air over them, by drawing heat, smoke and combustion gases away from them, or by diluting the smoke and hot combustion gases produced by a fire. It may be necessary to seek specialist advice.

Smoke detectors may be sited to monitor smoke within ventilation extract ducts. In general, such detectors are intended to assist in the prevention of spread of smoke by the ventilation system, by enabling any recirculation to be shut off in the event of a fire. These detectors may be connected to the fire alarm system but, if the smoke detectors are of normal sensitivity, they would not constitute a satisfactory means of detecting a fire in the area from which the air is drawn, as the smoke is diluted by the clean air that is extracted. Smoke might collect in one or more layers in ventilation ducts, so as much of the duct needs to be sampled as is practical. Duct probe sampling pipes with adequate holes are therefore arranged to cover the widest dimension of the duct.

Certain very high sensitivity smoke detection systems (often of the aspirating type) are sensitive enough to detect smoke that has been substantially diluted with clean air. Experience has shown that such systems, when used to monitor return air to air conditioning units by means of air sampling points mounted directly in the airflow, are capable of detecting very small, incipient fires, involving, for example, smouldering of electronic components within equipment cabinets in the protected space. This arrangement is usually regarded as supplementary to other forms of fire detection in the protected space (including very high sensitivity aspirating systems with air sampling points sited in accordance with practice normally adopted for point smoke detectors), owing to its limited response capability once the air movement ceases.

22.2 Recommendations for provision of automatic fire detectors

The following recommendations are applicable.

a) Fire detectors should be provided in accordance with the recommendations of **8.2**.

b) In enclosed stairways, fire detectors should be sited at the top of the stairway and on each main landing.

c) Other than in Category L4, L5 and P2 systems, if any flue-like structure, open stairway, shaft for a lift, escalator or hoist, or any enclosed chute, penetrates one or more ceilings, a fire detector should be sited at the top of the shaft or enclosure and, on each level, within approximately 1.5 m of the penetration.

NOTE 1 The need for fire detectors in these positions should be considered at the design stage of Category L5 and P2 systems.

NOTE 2 For any of the above flue-like structures a fire detector within 1.5 m is required only in the areas protected by the category of system in question.

d) If the system Category is such that automatic fire detection should be provided in any area that contains a horizontal void of 800 mm or more in height, automatic fire detection should also be provided in the void. Voids less than 800 mm in height need not be protected, unless either:

1) the void is such that extensive spread of fire or smoke, particularly between rooms and compartments, can take place before detection; or

2) on the basis of a fire risk assessment, the fire risk in the void is such as to warrant protection of the void.

NOTE 3 In Category P systems, it is common practice to protect all floor voids in electronic data processing installations, regardless of their depth, if the voids contain cables. Usually, this is on the basis of the probability of ignition and the amount of combustible material within the void, in conjunction with the consequences of a fire within the void in respect of business continuity. Guidance on protection of electronic data processing installations is given in BS 6266.

NOTE 4 If the fire risk within a void of 800 mm or more is considered to be low, consideration might be given to omission of fire detection from the void, subject to the agreement of the interested parties (see Clause **6**), but this should be recorded as a variation on the relevant system certificate. This might arise, for example, if the probability of ignition and development of fire in the void were very low, or if the void were limited in extent so that spread of fire beyond the room of origin, via the void, were unlikely.

e) If any lantern-light (see **3.29**) within a protected area is 800 mm or more in depth, or is used for ventilation, a fire detector should be sited in the lantern-light.

22.3 Recommendations for siting of heat and smoke detectors

The following recommendations are applicable.

a) Under flat ceilings, the horizontal distance between any point in a protected area and the detector nearest to that point should not exceed:

1) 7.5 m if the nearest detector is a smoke detector;

2) 5.3 m if the nearest detector is a heat detector.

NOTE 1 In corridors of width not exceeding 2 m, only points close to the centre line of the corridor need be considered, and accordingly the above recommendations will be satisfied if smoke or heat detectors are sited at intervals of 15 m and 10.6 m respectively, with the maximum dimension from the end wall being 7.5 metres and 5.3 metres respectively.

NOTE 2 If there is a facility for disabling sensor(s) within a multi-sensor detector leaving only a heat sensor then **22.3**a)2) applies.

b) If the protected area has a pitched ceiling, for detectors at or near the apex, the horizontal distances given in **22.3**a) may be increased by 1 % for each degree of slope, up to a maximum increase of 25 %. For detectors not at or near the apex the distances given in **22.3**a) apply.

c) In apex roofs, fire detectors should be sited at or near each apex, except that, if the difference in height between the bottom of the roof and top of the apex is less than the figures below, the roof may be treated as flat (see Figure 6):

1) 600 mm if the area is protected by smoke detectors;

2) 150 mm if the area is protected by heat detectors.

NOTE 3 Detectors may be regarded as "near the apex" referred to in **22.3**b) and c) if the vertical distance from the apex to the detector is within the figures given in **22.3**c)1) and 2) for the appropriate type of detector.

 © BSI 15 October 2002

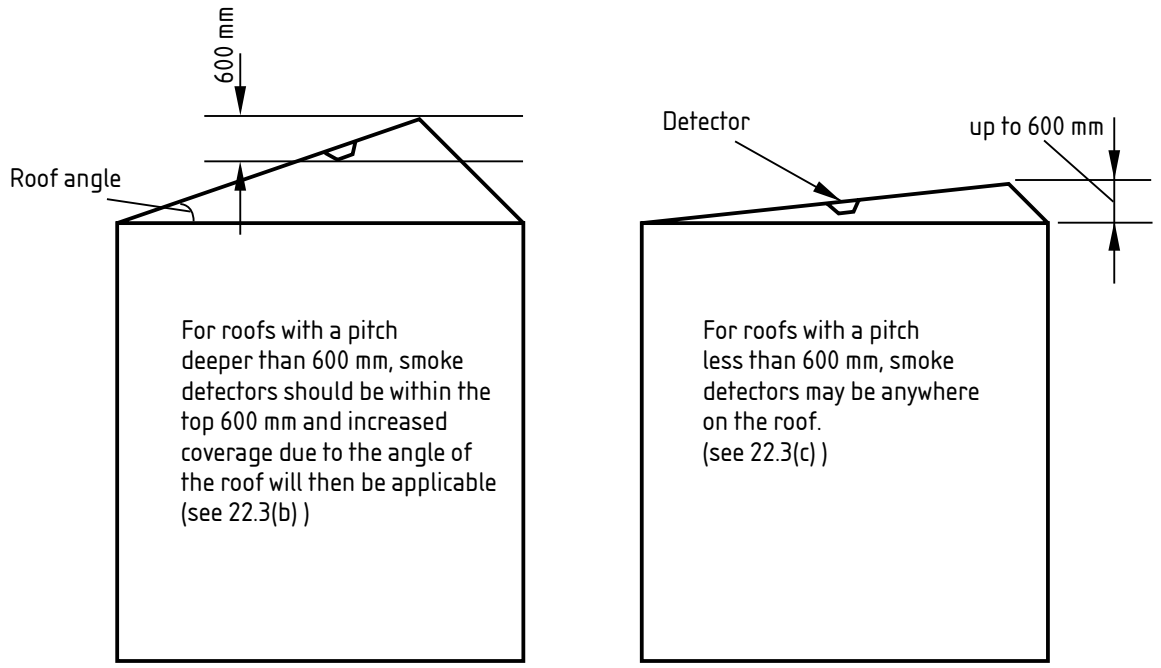

Figure 6 — Smoke detectors in pitched roofs [see **22.3**c)]

d) Other than within rooms in a Category L3 system [see **22.3**e)] or in voids [see **22.3**f)] or where a horizontal ceiling comprises a series of small cells [see **22.3**k)], fire detectors should be sited on ceilings, such that their sensitive elements are between the following distances below ceilings:

1) 25 mm – 600 mm for smoke detectors;

2) 25 mm – 150 mm for heat detectors.

e) Detectors within rooms that open onto escape routes in a Category L3 system should either be sited in accordance with **22.3**d) or should be sited on a wall, close to any door that opens onto an escape route. Wall mounted detectors should be sited such that the top of the detection element is between 150 mm and 300 mm below the ceiling, and the bottom of the detection element is above the level of the door opening.

NOTE 4 Care should be taken in rooms with a high ceiling height (for example height exceeding four metres).

NOTE 5 Where an automatic sprinkler installation initiates a fire alarm signal, via the fire alarm system, on flow of water from a single sprinkler head, a sprinkler head within a room may be regarded as an automatic fire detector for the purpose of this recommendation.

f) In unventilated voids, the sensing element of fire detectors should be sited within the top 10 % of the void or the top 125 mm, whichever is the greater (see Figure 7). In shallow voids, to comply with this recommendation, it might be necessary to mount the fire detector in an unusual orientation, in which case care should be taken that the deposition of dust or dirt cannot adversely affect the operation of the detector. The manufacturer's recommendations should be followed with regard to orientation and the ingress of dirt and dust and any consequent servicing recommendation.

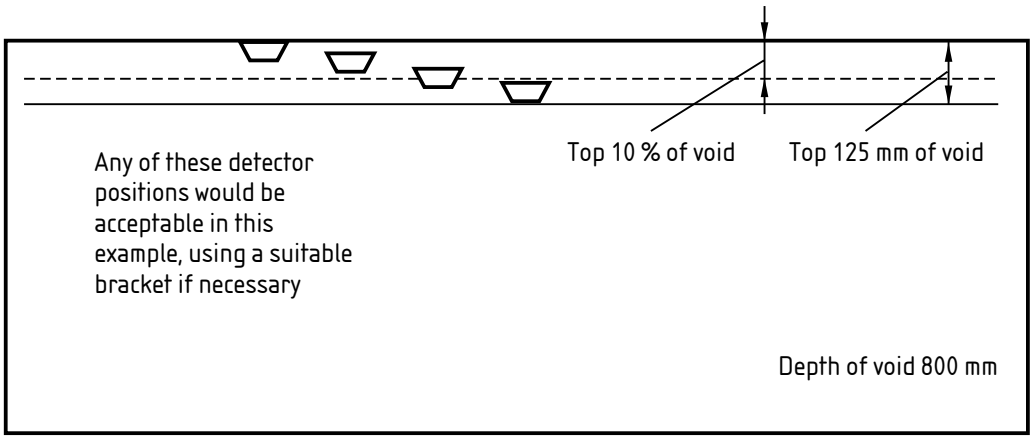

Figure 7 — Detectors in top 10 % of a void [see **22.3**f)]

g) Heat and smoke detectors should not be mounted within 500 mm of any walls, partitions or obstructions to flow of smoke and hot gases, such as structural beams and ductwork, where the obstructions are greater than 250 mm in depth. (This recommendation does not apply to detectors within rooms opening into escape routes in a Category L3 system).

NOTE 6 If an enclosed area has no horizontal dimension greater than one metre, it is impossible to comply with this recommendation; this should not be regarded as a variation, but the detector should be sited as close as possible to the centre of the space.

h) Where structural beams or ductwork for lighting fittings or other isolated ceiling attachments, not greater than 250 mm in depth, create obstacles to the flow of smoke, detectors should not be mounted closer to the obstruction than twice the depth of the obstruction (see Figure 8).

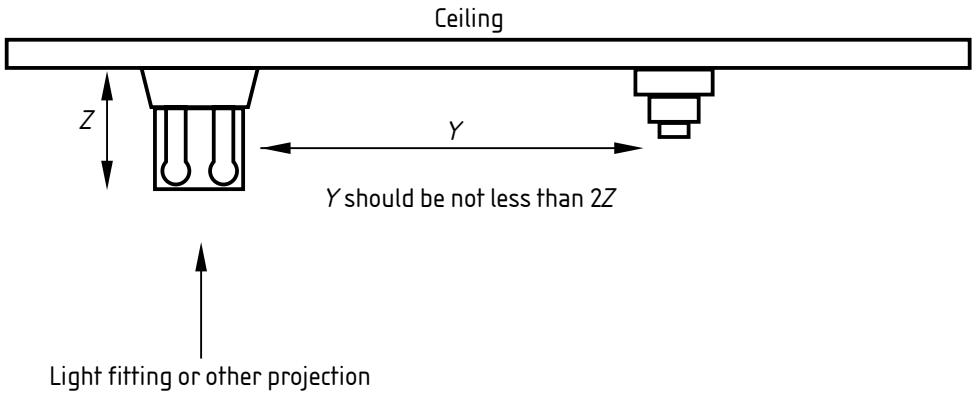

Figure 8 — Proximity of detectors to ceiling fittings [see **22.3**h)]

i) Where an area contains partitions or storage racks that reach within 300 mm of the ceiling, the partitions or storage racks should be treated as walls that extend to the ceiling (see Figure 9).

j) Ceiling obstructions, such as structural beams, deeper than 10 % of the overall ceiling height should be treated as walls [see Figure 10a)].

NOTE 7 Within horizontal voids, beams or obstructions that are deeper than 10 % of the overall depth of the void regardless of whether the void is above the ceiling or below the floor, should be treated as walls that sub-divide the void.

NOTE 8 For a cellular structure or closely spaced beams in a void, see **22.3**k).

 © BSI 15 October 2002

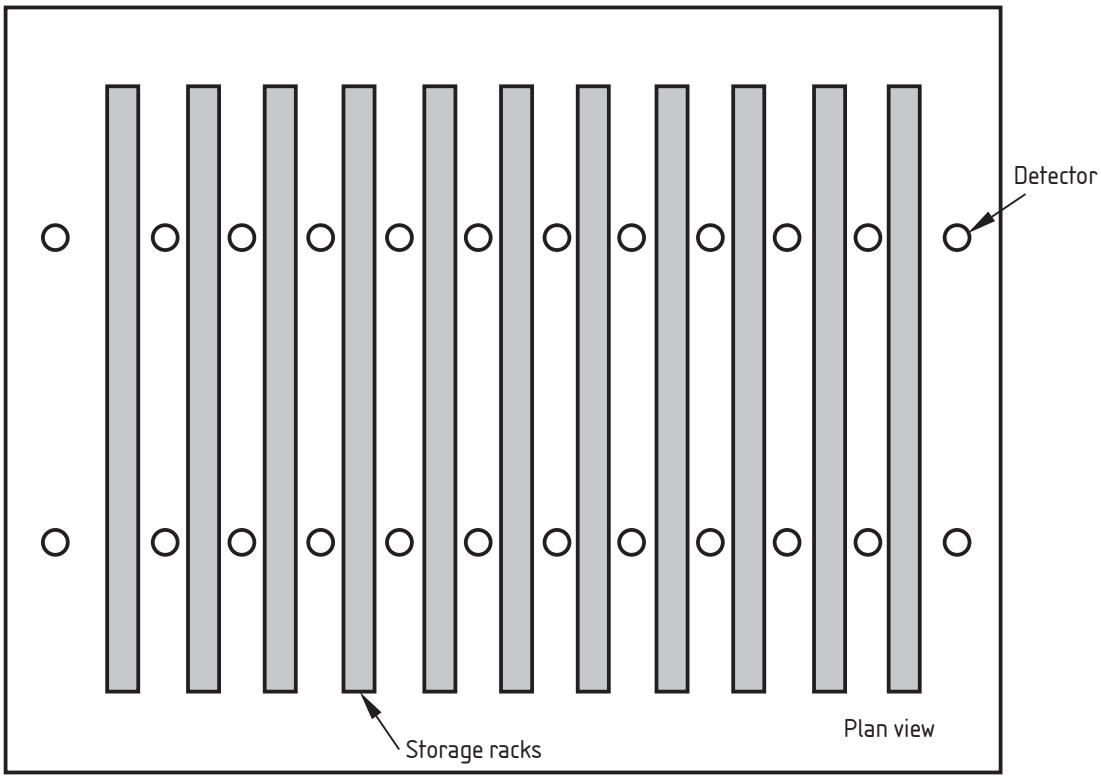

Example of warehouse with storage racks. The gap between the racks and the ceiling is less than 300mm. Each rack should therefore be treated as a wall and detection is needed in each aisle.

Figure 9 — Partitions or storage on racks

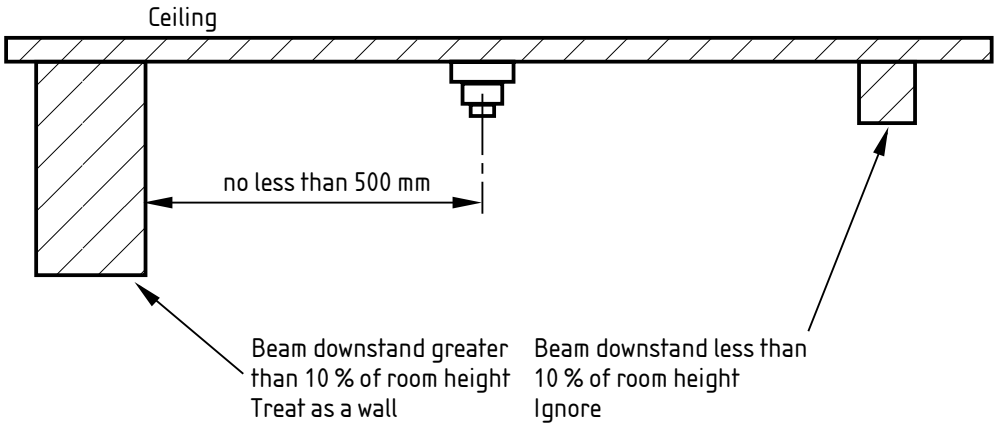

Figure 10a) — Ceiling obstructions treated as walls [see **22.3**j)]

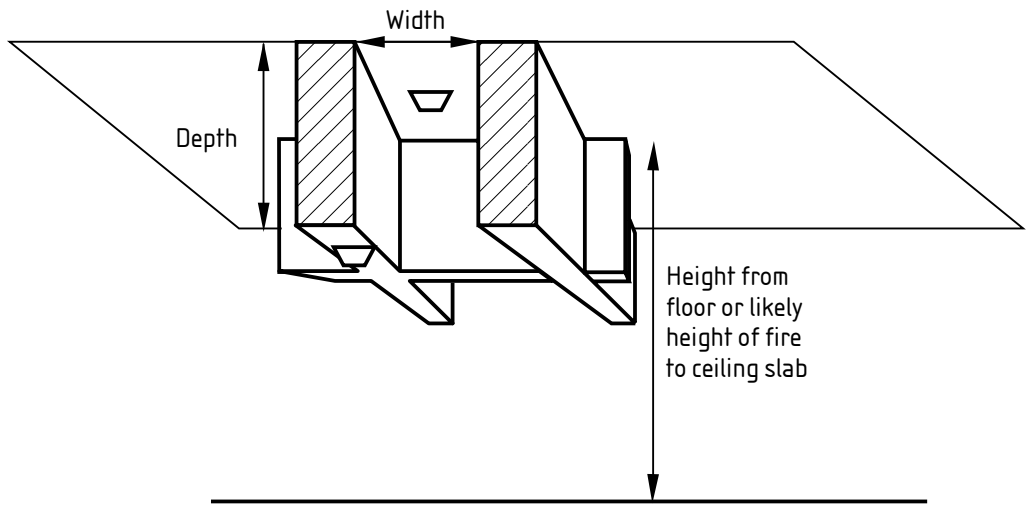

Figure 10b) — Horizontal ceiling comprising a series of small cells [see **22.3**k)]

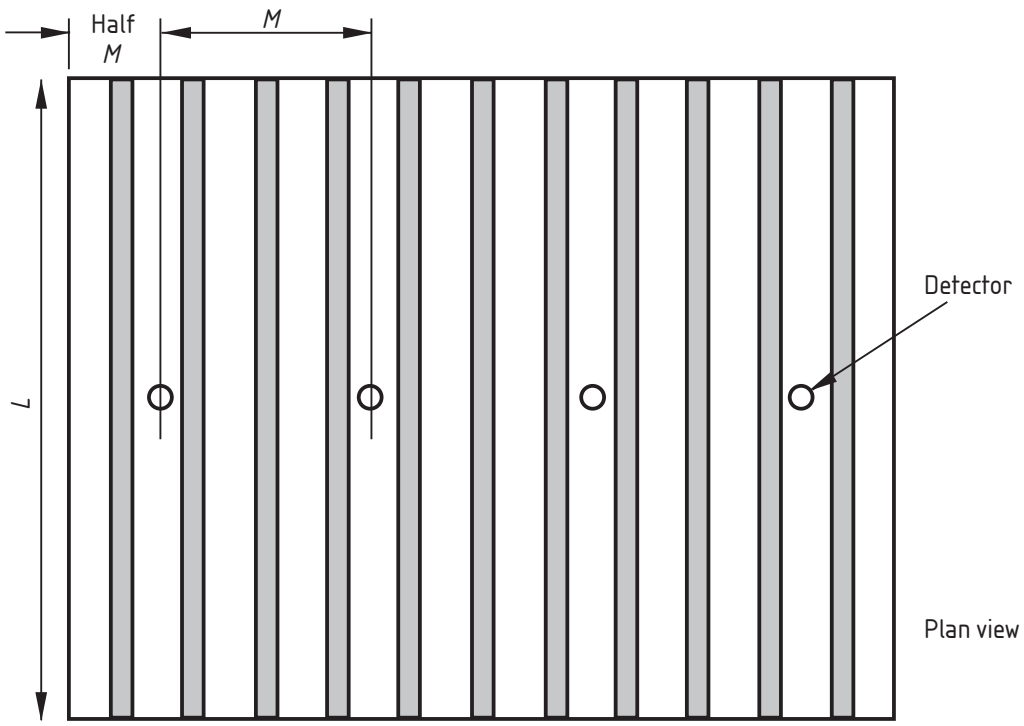

In this example beam downstands are greater than 10 % of ceiling height, *H*. *H* = 3 m
Smoke detectors are used in this example.
Using Table 2, the spacing, *M* should be no more than 2.3 m

Figure 10c) — Cells formed from joists [see 22.3j) and 22.3k)]

k) Where a horizontal ceiling comprises a series of small cells (a honeycomb ceiling), detector spacing and siting should be in accordance with Table 1. See Figure 10b).

 © BSI 15 October 2002

Where there are a number of closely spaced structural beams, such as floor joists, the cells become elongated. Provided that the longer dimension of the cells is no more than *L*, then across the shorter cell dimension, the spacing, *M*, between detectors should be as given in Table 2. The spacing for the end detector to the end wall is half *M*. Detectors should be in the centre of the cells. If the longer dimension of the cells is more than *L* (see below), then the cell should be stopped to the depth of the beam and at no more than *L*. If this is impractical, detection should be installed in every cell. See Figure 10c).

L = 10.6 m for smoke detectors.

L = 7.5 m for heat detectors.

l) Detectors above a perforated false ceiling may be used for protection of the area below the false ceiling if:

1) the perforations are substantially uniform, appear across the complete ceiling and throughout they make up more than 40 % of the surface; and

2) the minimum dimension of each perforation in any direction is 10 mm; and

3) the thickness of the ceiling is not greater than three times the minimum dimension of each perforation.

In all other cases, detectors should be mounted below the false ceiling, and if protection of the void above the false ceiling is necessary [see **22.2**d)], further detectors should be installed on the true structural ceiling within the void.

m) Detectors should not be mounted within one metre of any air inlet of a forced ventilation system. Where air is forced through a perforated ceiling, the ceiling should be imperforate for a radius of at least 600 mm around each detector (see Figure 11).

n) Detector siting should be such that a clear space of 500 mm is maintained below each detector (see Figure 12).

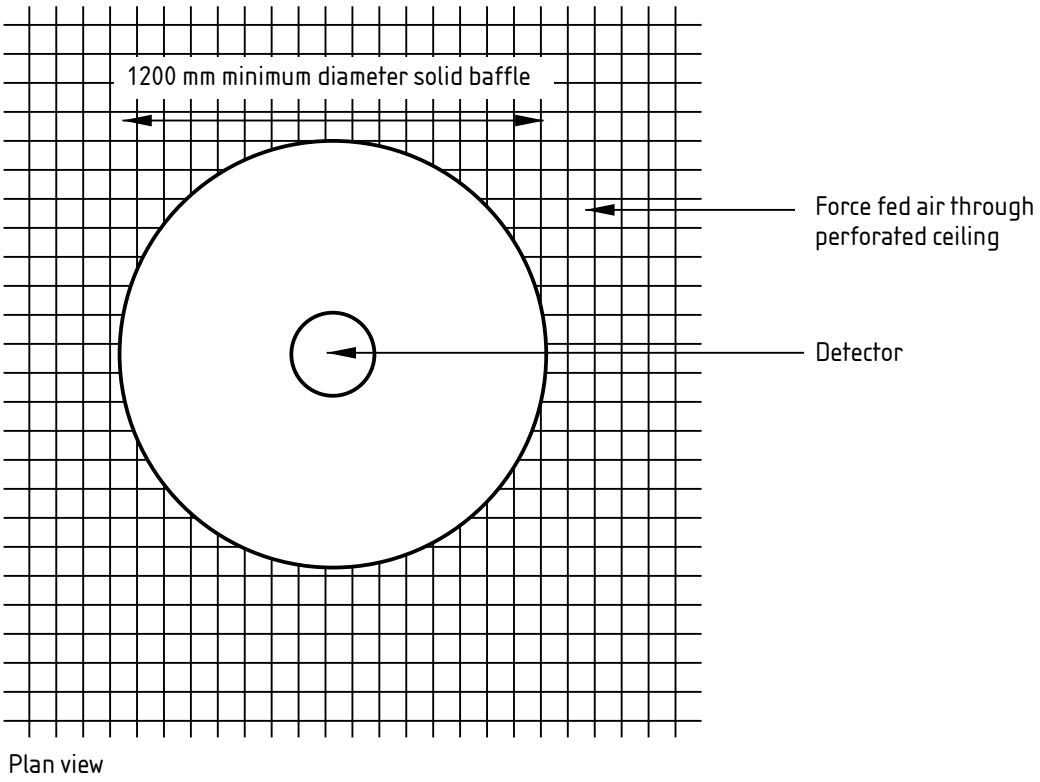

Figure 11 — Detector on perforated ceiling [see **22.3**m)]

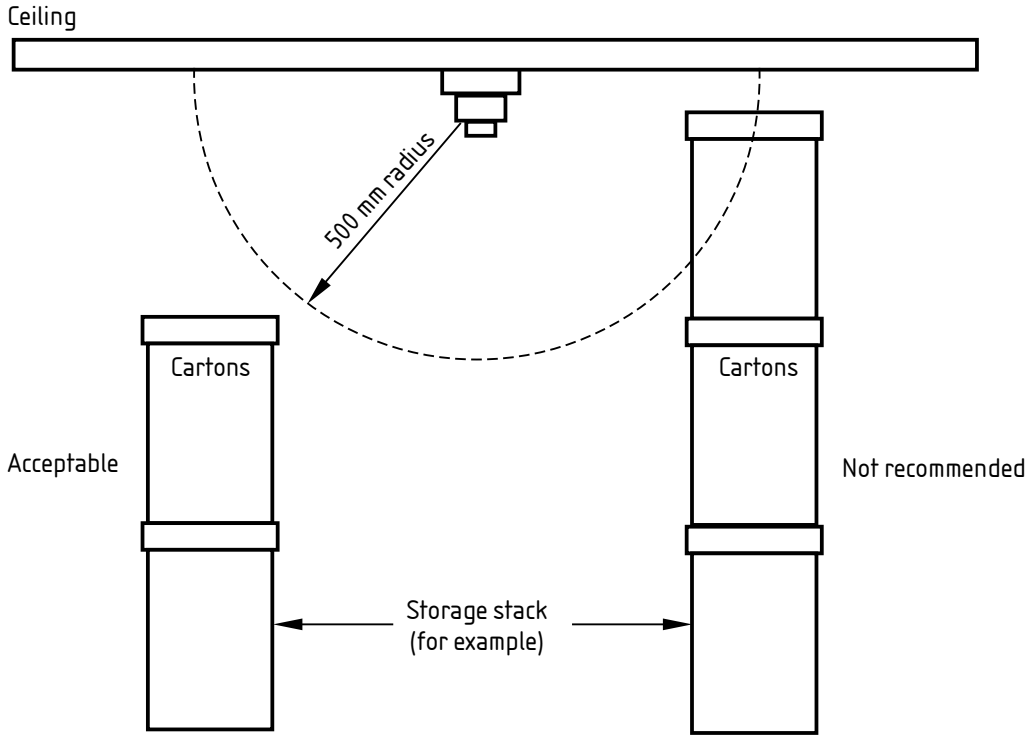

Figure 12 — Clear space around a detector [see **22.3**n)]

© BSI 15 October 2002

Table 1 — Spacing and siting of detectors on honeycomb and similar ceilings

Overall ceiling height from floor into cell *H* (to nearest whole metre)	Beam depth, *D*	Maximum distance between any point and the nearest smoke (heat) detector	Detector location if *W* is 4*D* or less	Detector location if *W* is more than 4*D*
6 m or less	less than 10 % *H*	As per flat ceilings	Underside of beams	On structural slab in the cell
more than 6 m	less than 10 % *H* and 600 mm or less	As per flat ceilings	Underside of beams	On structural slab in the cell
more than 6 m	less than 10 % *H* and more than 600 mm	As per flat ceilings	Underside of beams[a]	On structural slab in the cell
3 m or less	more than 10 % *H*	4.5 m (3 m)	Underside of beams	On structural slab in the cell
4 m	more than 10 % *H*	5.5 (4 m)	Underside of beams	On structural slab in the cell
5 m	more than 10 % *H*	6 m (4.5 m)	Underside of beams	On structural slab in the cell
≥ 6 m	more than 10 % *H*	6.5 m (5 m)	Underside of beams	On structural slab in the cell

Key

W = Width of cell;
D = Depth of beams that form each cell.

[a] Since mounting detectors at a depth of more than 600 mm below the highest point in the protected spaces does not comply with **22.3**d), protection in these circumstances might need careful consideration to determine the most suitable location and spacing of detectors.

Table 2 — Spacing and siting of detectors on ceilings with closely spaced structural beams or joists

Overall ceiling height from floor to structural slab (to nearest whole metre) *H*	Beam depth *D*	Maximum spacing between any two smoke (heat) detectors measured across the beams *M*
6 m or less	less than 10 % *H*	5 m (3.8 m)
more than 6 m	less than 10 % *H* and 600 mm or less	5 m (3.8 m)
more than 6 m	less than 10 % *H* and more than 600 mm	5 m (3.8 m)
3 m or less	more than 10 % *H*	2.3 m (1.5 m)
4 m	more than 10 % *H*	2.8 m (2 m)
5 m	more than 10 % *H*	3 m (2.3 m)
6 m or more	more than 10 % *H*	3.3 m (2.5 m)

22.4 Recommendation for siting of carbon monoxide fire detectors

Carbon monoxide fire detectors should be sited in accordance with all recommendations of **22.3** for smoke detectors.

22.5 Recommendations for siting of optical beam smoke detectors

The following recommendations are applicable.

a) Optical beam-type detectors should be sited in such a way that no point in the protected space is further than 7.5 m from the nearest point of the optical beam.

b) If the protected area has a pitched ceiling, for optical beam detectors at or near the apex, the figure of 7.5 m quoted in **22.5**a) may be increased by 1 % for each degree of slope, up to a maximum increase of 25 %. For optical beam detectors not at or near the apex the distance given in **22.5**a) applies.

c) The recommendations of **22.3**c), **22.3**d), **22.3**f), **22.3**i), **22.3**j) and **22.3**l) apply.

d) If optical beam smoke detectors are installed at a distance of more than 600 mm below ceiling level in order to provide supplementary detection of a rising smoke plume within a high space (e.g. an atrium), the width of the area protected on each side of an optical beam should be regarded as 12.5 % of the height of the beam above the highest likely seat of fire (see Figure 13).

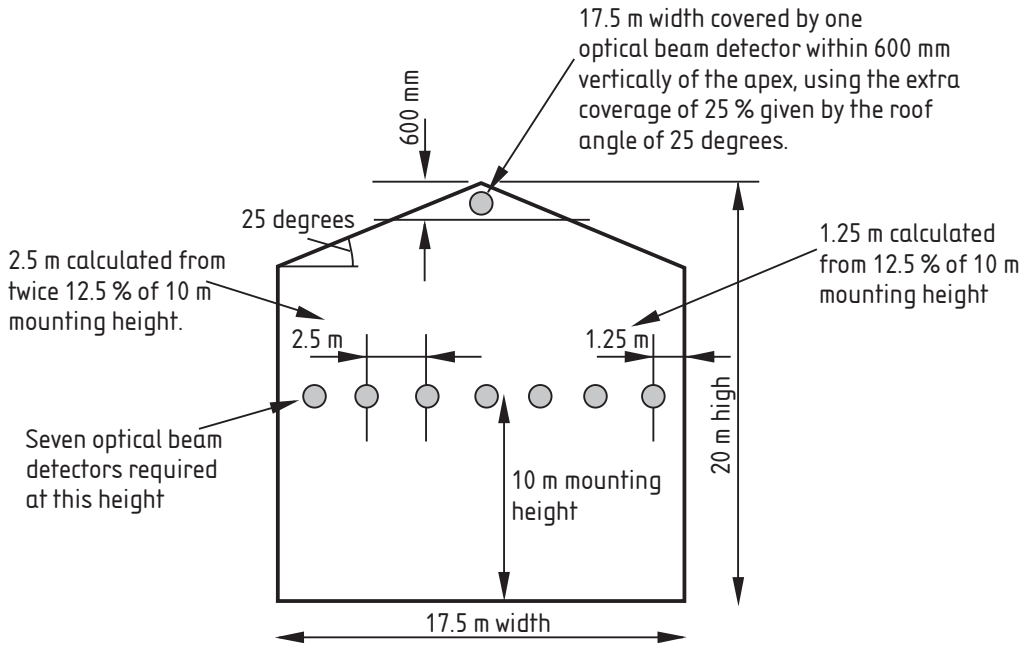

NOTE In this example, the likely source of the fire was at floor level.

Figure 13 — Sitting optical beam detectors

e) Where optical beams run closer than 500 mm to any wall, partition or obstruction to the flow of hot gases, such as structural beams and ductwork, then that section of the optical beam should be discounted from providing detection.

NOTE 1 Those parts of the optical beam within 500 mm of the beam's transmitter and receiver or reflector(s) need not be considered for the purpose of this recommendation.

f) If there is a probability of people walking within the area of the optical beam, then the optical beam should be at least 2.7 m above floor level. Consideration should also be given to the possibility of the optical beam being obstructed by the use of fork lift trucks, in which case the optical beam detector should be mounted at a suitable height.

NOTE 2 It is also necessary to comply with the recommendations of **22.5**d)

g) Transmitters, receivers and any reflectors should be mounted on solid construction that will not be subject to movement, likely to adversely affect the alignment of the optical beam, as a result of changes in temperature or imposed load.

h) The path length of the optical beam should not exceed that recommended by the manufacturer.

NOTE 3 Where the optical beam detector uses a reflector, the path length is the distance from the transmitter to the reflector and back to the receiver.

i) The area covered by an optical beam detector should not exceed that of a single detection zone given in Clause **13**.

 © BSI 15 October 2002

22.6 Recommendations for siting of line heat detectors

The following recommendations are applicable.

a) Line heat detectors should be sited in such a way that no point in the protected space is further than 5.3 m from the nearest point on a line heat detector.

b) If the protected area has a pitched ceiling, for line heat detectors at or near the ceiling, the figure of 5.3 m quoted in **22.6**a) may be increased by 1 % for each degree of slope up to a maximum increase of 25 %. For line heat detectors not at or near the apex the distance given in **22.6**a) applies.

c) The recommendations of **22.3**c), **22.3**d), **22.3**f), **22.3**i), **22.3**j) and **22.3**l) apply.

d) Where line heat detectors run closer than 500 mm to any wall, partition or obstruction to the flow of hot gases, such as structural beams and ductwork then that section of the line heat detector should be discounted from providing detection.

NOTE Those parts of a line heat detector within 500 mm of the control equipment need not be considered for the purpose of this recommendation.

e) Where a line heat detector is installed to protect a particular item of plant or cabling, as opposed to providing general area protection, the detector should be mounted as close as possible to the place where fire or overheating might occur, and either be mounted above the risk or in thermal contact with it.

22.7 Recommendations for siting of aspirating smoke detection systems

The following recommendations are applicable.

a) Where an aspirating smoke detection system is intended to provide general area protection, each aspirating sampling point should be regarded as a point smoke detector, provided that a single sampling point has equivalent sensitivity to a point type smoke detector. Accordingly, the siting of these sampling points should comply with the recommendations of **22.3**. However, as the detector actually draws samples of air through sampling points (holes in the pipework), it might be possible to mount the sampling points flush with a ceiling, provided the manufacturer confirms that this will not be detrimental to the effectiveness of the system to detect fire.

b) Where an aspirating smoke detection system is intended to provide protection that is supplementary to other forms of automatic fire detection (e.g. by monitoring return air to air conditioning equipment or monitoring specific items of equipment), the system should be installed in accordance with the guidance of the manufacturer.

NOTE For more information see the BFPSA Code of Practice for Category 1 Aspirating Detection Systems.

22.8 Recommendations for siting of flame detectors

The following recommendations are applicable.

a) Spacing of flame detectors should be within maximum limits specified by the manufacturer.

b) Where flame detectors are intended to provide general area protection, there should be a clear line of sight between all points within the protected area and one or more flame detectors.

c) Where flame detectors are intended to provide protection for a specific hazard(s), there should be a clear line of sight between the hazard(s) and one or more flame detectors.

22.9 Recommendations for limits of ceiling height

The following recommendations are applicable to heat, smoke and combustion gas detectors.

a) Other than in **22.9**b), heat, smoke and combustion gas detectors should not be mounted on ceilings higher than the limits recommended in column 1 of Table 3. If small sections of ceiling, not exceeding in total 10 % of the ceiling area within the protected area, exceed these limits, these higher sections are adequately protected provided that the ceiling height does not exceed the limits in column 2 of Table 3.

b) In the case of Category P systems, where the attendance time of the fire service (whether local authority or private) does not exceed five minutes then heat, smoke and combustion gas detectors should not be mounted on ceilings higher than the limits recommended in column 1 of Table 4. If small sections of ceiling, not exceeding in total 10 % of the ceiling area within the protected area, exceed these limits, these higher sections are adequately protected provided that the ceiling height does not exceed the limits in column 2 of Table 4.

NOTE The fire brigade response time ought to be the subject of consultation. See Clause **6**.

Table 3 — Limits of ceiling height (general)

Detector Type	Column 1 Generally applicable maximum ceiling height	Column 2 10 % of ceiling height no greater than
Heat detectors conforming to BS EN 54-5		
Class A1	9.0	10.5
Other Classes	7.5	10.5
Point smoke detectors	10.5	12.5
Carbon monoxide detectors	10.5	12.5
Optical beam smoke detectors	25.0	25.0
Aspirating smoke detection systems complying with BFPSA code of practice for Category 1 aspirating detection systems		
Normal sensitivity	10.5	12.5
Enhanced sensitivity	12.0	14.0
Very high sensitivity	15.0	18.0
Other fire detectors	As specified by the manufacturer	

Table 4 — Limits of ceiling height (Category P systems and five minute fire service attendance)

Detector Type	Column 1 Generally applicable maximum ceiling height	Column 2 10 % of ceiling height no greater than
Heat detectors conforming to BS EN 54-5		
Class A1	13.5	15.0
Other Classes	12.0	15.0
Point smoke detectors	15.0	18.0
Carbon monoxide detectors	15.0	18.0
Optical beam smoke detectors	40.0	40.0
Aspirating smoke detection systems complying with BFPSA code of practice for Category 1 aspirating detection systems		
Normal sensitivity	15.0	18.0
Enhanced sensitivity	17.0	21.0
Very high sensitivity	21.0	26.0
Other fire detectors	As specified by the manufacturer	

© BSI 15 October 2002

22.10 Smoke detectors in ventilation ducts

Where the specification requires smoke detectors within air extraction ducts, the following recommendations are applicable.

a) Smoke detectors or probes should be installed in straight stretches of ductwork, at a distance from the nearest bend, corner or junction of at least three times the width of the duct.

b) The suitability of the smoke detector for this type of application should be determined from guidance produced by the manufacturer.

c) The sampling inlet probe and the holes in the probe should be arranged, according to the manufacturer's instructions, to cover as much of the duct as possible.

NOTE 1 To comply with this subclause normally requires the probe to cover the wider dimension of the duct and the length of the probe to be at least two-thirds of that dimension.

NOTE 2 It is not considered that detectors, other than smoke detectors, are suitable for detecting products of combustion that are circulated by means of forced air ventilation systems.

23 Control and indicating equipment

23.1 Commentary

Control and indicating equipment performs three principal functions, namely:

— automatic monitoring and control of circuits external to the equipment (such as fire detection and fire alarm device circuits) and supply of power to these circuits;

— indication of fire signals, fault signals and their location;

— manual control to facilitate actions such as testing, disablement of devices, triggering of fire signals, silencing of audible fire warnings and resetting the system after a fire signal.

As these facilities are required by different people at different times, all these facilities need not be provided at a single location. For example, according to the premises, indication of faults might be required by a site engineer, who might not require detailed information on fire signals, whereas accurate information on the location of a fire is essential to the fire service, who might need no specific information about system faults.

In small, simple systems, the control, indicating and power supply equipment for the system will normally be housed within a single enclosure. In large, complex premises, the main control equipment circuitry might be installed at one location, power supplies might be distributed around the building, while main indicating equipment incorporating certain basic controls is installed at another location, such as near a main entrance to the building; repeat indicating equipment, with or without controls, may be installed at further locations, such as alternative points of entry for the fire service.

Since premises vary in size, complexity and fire strategy, it is essential that the nature and siting of manual controls and all indicating equipment, in particular, is suitable for the fire and evacuation procedures that are to be adopted and for the persons that will use the system, including security or reception staff and fire-fighters attending a fire. Siting of control circuitry and power supplies will more likely be determined by engineering considerations and the preference of the purchaser or user.

Although the use of text displays (e.g. liquid crystal or vacuum fluorescent displays) might be sufficient for the needs of the user, the provision of a separate, light emitting indicator for every zone on the system is regarded as valuable to fire-fighters. This enables a simple "at a glance" overview indication of all zone(s) in which fire has been detected, without the need for manual intervention by fire-fighters, and enables spread of fire to be easily monitored.

23.2 Recommendations

23.2.1 The following recommendations are applicable to the siting of control and indicating equipment.

a) Indicating equipment, in conjunction with suitable manual control facilities, should be sited at an appropriate location for both staff and fire-fighters responding to a fire signal. This should normally comprise an area on the ground floor close to the entrance to the building likely to be used by the fire service, or a suitably sited, continuously manned control room from which at least initial control of any fire incident, by staff and/or the fire service, will be implemented. In complex premises, there should be consultation between the user or purchaser (or others acting on their behalf) and the fire service, regarding the siting of all control and indicating equipment and the facilities provided. Where there are multiple entrances to a complex building, there should also be consultation with the fire service regarding the possible need for repeat control and/or indicating equipment.

NOTE In buildings that are not continuously occupied, siting of indicating equipment in a location that will be visible to the fire service from outside the building can be of benefit, particularly if there is a facility for transmission of alarms to an alarm receiving centre. On arrival at the building, at a time when the building is unoccupied, the number of zones indicating a fire signal may assist the officer in charge in making a decision as to whether to force entry to the building or await the attendance of a keyholder.

b) All control, indicating and power supply equipment that is likely to need routine attention for maintenance should be sited in readily accessible locations that facilitate safe maintenance work.

c) The ambient light level in the vicinity of all control and indicating equipment should be such that visual indications can be clearly seen, controls easily operated and any instructions or legends can be easily read.

d) The ambient noise level in the vicinity of all control and indicating equipment should not be such as to prevent audible indications (such as the fault warning sounder) from being heard.

e) The fire alarm control and indicating equipment, ELV power supply equipment for the control and indicating equipment and other essential control facilities should be sited in areas of low fire hazard level, so that the equipment is unlikely to be involved in a fire before adequate warning has been given.

f) In Category L and Category P systems, the area(s) in which any control and indicating equipment(s), power supply (or supplies) for the control and indicating equipment and other essential control facilities should be protected by automatic fire detection unless:

1) the fire hazard level is negligible and there is an adequate degree of fire separation between that area and any area in which the fire hazard level is not negligible;

NOTE 1 The above conditions often apply to a relatively “sterile” foyer of a building.

or

2) the area is continuously manned in the case of Category P systems, or continuously manned when the building is occupied by any person in the case of Category L systems.

g) In premises in multiple occupation with communal parts, main control and indicating equipment should be located within a communal area, such as an entrance hall. Where no communal parts exist, the equipment should be sited in an area to which access is possible at all times that the premises are generally occupied.

23.2.2 The following recommendations apply to the facilities provided for visual indication of fire signals.

a) The indicating facilities should be suitable for the fire and evacuation procedures intended for the building. In complex premises, there should be adequate consultation between the interested parties (see **6.2**) to ensure that appropriate indicating facilities are provided.

b) The primary indication of the area(s) from which a fire signal(s) has originated should comprise an indication of the zone.

c) The form of zone indication should comprise a separate light-emitting indicator for each zone of the system (e.g. a LED matrix or illuminated mimic diagram), such that the indicating equipment is capable of simultaneous display of fire signals on every zone.

NOTE 1 In very large premises it may be acceptable to use a hierarchal arrangement of displays. For example, control and indicating equipment may indicate the sector of origin, while further indicating equipment in the sector indicates the detection zone(s) of origin.

 © BSI 15 October 2002

d) A visual display unit (VDU) may be used to provide the display recommended in **23.2.2**c) provided that:

1) the VDU can provide a simultaneous display of fire signals in all zones, without manual intervention; and

e) because the reliability of a single VDU is not adequate, a back-up form of zone indication is provided; this may comprise a second method of indication complying with **23.2.2**c), a second VDU or a printer configured to automatically print out the fire information.

NOTE 2 Printers are not considered suitable as a primary indication since, in the event of ink, ribbon or paper being exhausted, the indication will be lost. They may, however, be acceptable as a back-up or supplement to another display.

f) On or adjacent to indicating equipment, there should be a diagrammatic representation of the building, showing at least the building entrances, the main circulation areas and the division into zones. Where the division into zones is not provided by the display recommended in **23.2.2**c) or **23.2.2**d), a correctly orientated plan of the premises should be displayed.

23.2.3 The following recommendations apply to facilities provided for control of the system.

a) The control facilities should be suitable for the fire and evacuation procedures intended for the building. In complex premises, there should be adequate consultation between the interested parties (see **6.2**) to ensure that appropriate control facilities are provided.

b) In addition to the sounder silence and resound control provided by the control and indicating equipment, there should also be an evacuate control. A clearly labelled facility should be provided on or immediately adjacent to the control equipment to enable fire alarm sounders to be started. Where evacuate control(s) comprise manual call point(s), the call points should be clearly labelled to distinguish their function from that of other manual call points in the building. Operation of such a control should not be dependent on the state of any silencing or disablement device. The evacuate control may be the same as the re-sound control, provided that it starts all of the fire alarm sounders on the system and is appropriately labelled.

c) Where the premises are divided into two or more alarm zones (see **3.3**), the strategy for phased evacuation should be implemented by the system designer (see **19.2.1**). Normally a separate evacuate control, complying with **23.2.3**b), should be provided for each part of the protected premises in which an evacuation signal needs to be given simultaneously. In premises with phased evacuation, in which stairway capacity is inadequate for a single phase evacuation, no single control that initiates an "Evacuate" signal in all alarm zones simultaneously should be provided, but such a control should be provided in all other buildings with two or more alarm zones (see **19.2.1**).

d) The operation of certain manual controls (for example, a disablement control) should be limited to authorized personnel. Where this limitation is not provided on the control equipment (for example, by use of a key operated switch), then it may be provided by restricting access to the equipment by the use of a lock or, in a disciplined environment (such as a security control room), by restriction of access to the control equipment to authorized personnel.

NOTE The operation and access of all manual controls is defined in BS EN 54-2. Access level 1 has no security, but access level 2 requires authorized access. The control of certain facilities such as the manual evacuate control [see **23.2.3**b) and c)], when included within the control and indicating equipment, is restricted to personnel authorized at access level 2.

24 Networked systems

24.1 Commentary

With a networked system, the functions of the control and indicating equipment are not centralized in one location or panel, but instead are distributed amongst a number of "sub-panels" located remotely from each other. These panels are then inter-connected by a network, which usually serves as a data highway. Some sub-panels may simply act as "data gathering" panels and provide no indications. Others may be fully functional control and indicating panels, configured so as to "stand alone" and continue to operate normally in the event of a failure of the communications link between sub-panels.

Networked systems are usually installed in the following circumstances:

a) where the fire alarm system is large and beyond the capacity of single control and indicating equipment;

b) where there is a need for centralized monitoring and/or control of a number of fire alarm systems in different buildings in the same vicinity (e.g. on the same site).

*The effect of a failure of the communications link and the implications for fire alarm system operation will depend on the configuration of the networked system, the type of network and whether or not the network forms part of the critical signal path (see **3.13**).*

Ring or loop networks are more resilient to communications failures than radial type networks. Peer to peer networks are less vulnerable to loss of function than networks with a central processor controlling panel to panel communications.

If all sub-panels can function as "stand alone" fire alarm systems and do not depend on the network to facilitate primary alarm functions (e.g. sounding the alarm and summoning the fire service), a communications failure will have no significant effect, and the network can be considered as an ancillary circuit. If, however, the cause and effect logic for the operation of the system depends on the network, the communications link needs to be afforded the monitoring, integrity and reliability of a critical signal path. The more the networked system is dependent upon the communications link to effect primary functions of the fire alarm system, the greater needs to be the protection afforded to the communications link.

*In the case of a), the overall integrity, reliability and availability of the networked system needs to be the same as that of a single fire alarm system and needs to satisfy the recommendations of all other clauses of this standard. In particular, the network needs to be monitored for faults (see **12.2.1**), be wired in a suitable cable (see Clause **26**) and, beyond the alarm zone of origin, needs to be capable of facilitating an appropriate response to the operation of a manual call point within 10 s. The recommendation for a three second response within the alarm zone of origin remains unaffected [see **20.2**b)].*

In this case, the communications link between sub-panels needs to be considered as part of the critical signal path.

The communications link also needs to be considered as a critical signal path in the case of b) if the communications link is required to facilitate primary alarm functions.

24.2 Recommendations

The following recommendations are applicable.

a) Sub-panels not required for indication purposes need not incorporate the indication facilities recommended in **23.2** and need not be visible, but should still be readily accessible for maintenance purposes. Similarly, audible warnings may be suppressed or disabled.

b) The communications link between sub-panels should be monitored in accordance with the recommendations of **12.2.1** for wired networks and **27.2**b)6) for radio networks.

c) A fault on the communications link between sub-panels should not affect the operation of any sub-panel.

d) In networked systems in which the communications link forms a critical signal path and comprises one or more cables, the cable installation should comply with the recommendations of **26.2**, except that standard fire resisting cables [see **26.2** and Figure 14a) and Figure 14b)] may be used in all circumstances in which:

— the network is configured as a loop; and

— there is diverse routing of incoming and outgoing circuits, except in the immediate vicinity of the sub-panel; and

— there will be no loss of communication to any sub-panel in the event of a single open or short circuit on the loop.

e) The delay between operation of any manual call point and the giving of an "Evacuate" signal in, at least, the alarm zone within which the manual call point is located should comply with **20.2**b). The delay in the giving of appropriate alarm signals in alarm zones beyond that in which the manual call point is located should not exceed 10 s.

f) In networked systems in which the communications link forms an ancillary circuit and comprises one or more cables, the cable installation should comply with the recommendations of **26.2**.

NOTE **26.2** recommends fire resistance only for cables that comprise parts of the critical signal paths and for low voltage mains supply cables.

 © BSI 15 October 2002

25 Power supplies

25.1 Commentary

The normal power supply for the fire alarm system will normally be derived from the low voltage mains supply in the building, transformed or modified as necessary. The mains supply needs to be reliable and capable of supplying the largest load that can be placed on it under normal, fire and fault conditions. If the fault condition relates to the power supply and causes an over current condition on the low voltage supply circuit, it is accepted that the low voltage circuit breaker may trip out.

In order to minimize the potential for failures, the design of the mains supply to the system needs to be such that it is unlikely to be affected by faults on other circuits or equipment, or by isolation of supplies in the building for maintenance or economy in consumption of electricity.

It is, nevertheless, likely that the mains supply will fail at some time during the lifetime of the fire alarm system. This can arise from failure of the mains supply to the building or failure of the final circuit serving the fire alarm system. Accordingly, the mains supply needs to be backed up by a standby supply that is able to support the system while the fault in the mains supply is corrected. (The provision of a standby supply is a requirement of the Health and Safety (Safety Signs and Signals) Regulations 1996 [1]). The standby supply also needs to be reliable, and transfer between the two supplies should not affect the operation of the system.

In most parts of the United Kingdom, most failures in public electricity supplies are relatively short in duration, and prolonged failures exceeding 24 h are uncommon. The recommendations in this standard are based on this assumption, and, for Category M and Category L systems, the duration of standby batteries need not, therefore, normally be capable of supplying power to the system for longer than 24 h. A greater duration might, however, be necessary if the probability of failure of a public or private electricity supply for periods exceeding 24 h is considered to be significant.

In the event of a more prolonged failure of the supply to a Category M or Category L system, when the premises are unoccupied, no one is at risk. If on re-occupation, the supply to the building is still isolated, most users can reasonably be expected to appreciate the effect on the fire alarm system and indeed other safety systems (such as emergency escape lighting) and to take appropriate action.

*Failure of the final circuit serving the fire alarm system is, however, possible. If this occurs when the premises are unoccupied (e.g. over a weekend) the system might be inoperative on re-occupation. This will be less obvious to the user, and it is important that the presence of a power supply to the system is indicated by a visual indicator at the indicating equipment to enable total power failure to be identified by the user, who needs to check the fire alarm system on re-occupation [see **47.2**b)].*

Category P systems are required to provide protection when the premises are unoccupied. However, there is a need to set some practical limit on the duration of standby batteries. If it is considered by the user that the limit recommended in this standard is insufficient to cater for the longest period for which premises might be unattended, the user needs to consider arrangements for inspection of the system during the unoccupied period, consider a facility to transmit power supply fault signals to an alarm receiving centre, or consider the need for standby batteries with a longer duration.

If the premises are provided with an automatically started standby generator, the capacity of the standby batteries in a Category M or Category L system may be reduced, provided the circuits served by the generator include that of the fire alarm system. This relaxation does not apply to Category P systems, as, when the premises are unoccupied, there is no one present to detect, and take action on, a failure of the standby generator to start on mains power failure.

In some complex buildings, such as shopping centres, additional indicating equipment, such as colour graphics terminals, not essential for compliance with this standard, may be provided to assist the user in the monitoring and control of fire incidents. This additional equipment can sometimes draw substantial current. If the equipment is not essential for full compliance of the system with this standard, it might not be necessary for the power supplies for the equipment to comply in full with the recommendations of this standard, particularly in respect of standby battery capacity. However, if the equipment is used as the normal user interface, for the purposes of control or indication, confusion of operators and degraded monitoring and reduced control of a fire incident may result. In these circumstances, a standby power supply still needs to be provided for the additional monitoring equipment, but its duration may be reduced below that otherwise recommended in this standard.

25.2 Recommendations for mains power supplies

The following recommendations are applicable to the low voltage mains supply to the system.

NOTE 1 This supply should be regarded as an integral part of the fire alarm system, particularly for the purpose of certification of the system (see Clause **41**), regardless of whether the electrical installation within the building is provided by the organization responsible for installation of the fire alarm system.

a) For reasons of electrical safety, the mains supply to all parts of the fire alarm system should be supplied, via an isolating protective device (such as a circuit-breaker), from the load ("dead") side of the main isolating device for the building. Where the user requires to isolate the building during closed hours, a separate supply should be provided for the fire alarm system that should not normally be isolated during closed hours.

b) The mains supply final circuit(s) to all parts of the fire alarm system should be dedicated solely to the fire alarm system, and should serve no other systems or equipment. The circuit(s) should be derived from a point in the building's electrical distribution system close to the main isolating device for the building.

c) To facilitate local isolation during maintenance, suitable means should be provided for double pole isolation of the low voltage supply circuit that serves the power supply and control equipment [see **29.2**e)].

d) Subject to compliance with **25.2**a) to c) and BS 7671, the number of isolating devices between the incoming power supply to the building and the fire alarm system power supply unit should be kept to the minimum practicable.

NOTE 2 For example, the supply can comprise a dedicated circuit emanating from the first electrical distribution board in the building's electrical distribution system.

e) In certain systems within very large buildings, in which networked control panels or distributed power supply units are used, the recommendation of **25.2**d) might be impracticable. If, with the agreement of the interested parties (see Clause **6**), a variation is adopted, whereby the mains power supply to this equipment is derived from one or more local distribution boards in the building, the number of isolating devices between the main incoming supply and the local distribution board should still be kept to the minimum practicable. It should also be ensured that any need to isolate the supply to the local distribution board (e.g. for maintenance) will be infrequent, and that the risk of inadvertent isolation is low. In addition, there should still be compliance with **25.2**b), **25.2**f), **25.2**g) and **25.2**h).

f) Every isolator and protective device that can isolate the supply to the fire alarm system, other than the main isolator for the building, should be labelled either:

"FIRE ALARM", in the case of a protective device that serves only the fire alarm circuit, but incorporates no switch;

"FIRE ALARM. DO NOT SWITCH OFF", in the case of a switch (whether incorporating a protective device or not) that serves only the fire alarm circuit;

"WARNING. THIS SWITCH ALSO CONTROLS THE SUPPLY TO THE FIRE ALARM SYSTEM", in the case of any switch that disconnects the mains supply to both the fire alarm system and to other circuits.

NOTE 3 Labels should be clear and in durable fade resistant material.

g) Every isolator, switch and protective device that is capable of disconnecting the mains supply to the fire alarm system should be situated in a position inaccessible to unauthorized persons or be protected against unauthorized operation by persons without a special tool.

NOTE 4 A special tool may, for example, be a key actuator (sometimes called "secret key") for a mains switch device.

h) The circuit supplying the fire alarm system should not be protected by a residual current device unless this is necessary to comply with the requirements of BS 7671. Where a residual current device is necessary for electrical safety, a fault on any other circuit or equipment in the building should not be capable of resulting in isolation of the supply to the fire alarm system.

i) Irrespective of the condition of any standby battery (e.g. disconnected or fully discharged), the mains power supply should be capable of supplying the maximum alarm load of the system (see **3.35**).

 © BSI 15 October 2002

25.3 Recommendations for fire alarm system power supply units

The following recommendations apply to every power supply unit that forms part of the fire alarm system.

a) Transition between the normal supply and the standby supply, and vice versa, should not cause any interruption to the operation of the system or result in a false alarm.

b) A fault in the normal supply should not adversely affect the standby supply or vice versa. The operation of a single protective device should not result in failure of both the normal and the standby supply.

c) The presence of the normal or the standby supply should be indicated by a green indicator, located in a position that makes it readily obvious to any person responsible for monitoring faults on the fire alarm system (e.g. at the location of the main indicating equipment).

d) Normal and standby supplies should each be independently capable of supplying the maximum alarm load of the system (see **3.35**), irrespective of the condition of the other supply.

25.4 Recommendations for standby supplies

The following recommendations are applicable.

a) The standby supply should comprise a secondary (rechargeable) battery with an automatic charger.

b) The battery should be of a type having a life of at least four years under the conditions of use likely to be experienced in the fire alarm system. Automotive batteries (of the type used for starting car engines) should not be used.

c) Labels should be fixed to all batteries indicating their date of installation. The labels should be so sited that they can be read without disturbing the batteries.

d) The charging rate of the battery should be such that, having been discharged to its final voltage, the battery can be charged sufficiently to comply with the recommendations of **25.4**e) after a charging period of 24 h.

NOTE This is the requirement within BS EN 54-4, but it is included here as a reminder that connecting larger batteries than originally designed, for example due to an unforeseen extra load, can result in unacceptably long recharge times.

e) The capacity of all standby batteries that serve any part of the system that must operate correctly in order to satisfy the recommendations of this part of BS 5839 should be such as to satisfy the following recommendations. The capacity required to satisfy these recommendations should be calculated in accordance with Annex D.

1) For a Category M or Category L system, the capacity should be sufficient to maintain the system in operation for at least 24 h, after which sufficient capacity should remain to provide an “Evacuate” signal in all alarm zones for at least 30 min, unless the building is provided with an automatically started standby generator [see **25.4**e)2)].

NOTE 1 If the premises are likely to be unoccupied for longer than the duration of the standby battery capacity at any time, and there is a facility for transmission of fire signals to an alarm receiving centre, it would be of benefit to transmit power supply fault signals to the alarm receiving centre, for notification of the user.

2) For a Category M or Category L system in a building with an automatically started standby generator that serves the fire alarm system, the capacity should be sufficient to maintain the system in operation for at least six hours, after which sufficient capacity should remain to provide an “Evacuate” signal in all alarm zones for at least 30 min.

NOTE 2 If a circuit serving part of the fire alarm system (e.g. distributed power supply unit) is not served by the standby generator, the capacity of the standby battery should comply with **25.4**e)1).

3) For a Category P system in which either of the following apply, the capacity should be sufficient to maintain the system in operation for at least 24 h, after which sufficient capacity should remain to operate all fire alarm devices for at least 30 min:

— where the building is continuously manned, or inspected outside normal working hours, such that staff in the building would be aware of a power supply fault indication on the system within no more than six hours of its occurrence; or

— where power supply fault signals are transmitted automatically to an alarm receiving centre, instructed to notify a keyholder and, if required, the previously agreed service provider immediately on receipt of a fault indication from the premises.

4) For all other Category P systems, the capacity should be sufficient to maintain the system in operation for at least 24 h longer than the maximum period for which the premises are likely to be unoccupied or for 72 h in total, whichever is less, after which sufficient capacity should remain to operate all fire alarm devices for at least 30 min. If the building is likely to be unoccupied for more than the duration of the standby battery capacity at any time, and there is a facility for transmission of fire signals to an alarm receiving centre, power supply fault signals should also be automatically transmitted to the alarm receiving centre, for immediate notification of a keyholder.

f) If, in addition to the equipment recommended in Clause **23**, additional control and indicating equipment, over and above that necessary for compliance with this part of BS 5839, is provided, it might not be necessary for any standby battery capacity supplying the additional equipment to comply with the recommendations of **25.4**e). However, if the equipment is used as the normal method of indication of fire to persons responsible for monitoring the system, a standby supply should still be provided for this additional equipment. If the equipment recommended in Clause **23** is suitably sited for use as a "default" in the event of failure of the additional equipment, the capacity of the standby batteries serving the additional equipment should be sufficient to operate the system in the quiescent mode for at least four hours. If the equipment recommended in Clause **23** is not suitably sited to enable effective control and monitoring of a fire incident, the standby power supplies for the additional equipment should satisfy the recommendations of **25.4**e).

26 Cables, wiring and other interconnections

26.1 Commentary

*The components of most fire alarm systems are connected by cables and wiring, but it is possible to connect them by other means, such as radio or fibre optics. Recommendations for radio-linked systems are given in Clause **27**. Where fibre optic connections are used, they need to provide at least equivalent integrity and reliability to other cables that are recommended for the same purpose.*

It is essential that all interconnections operate correctly at the time of a fire. This is particularly important in the case of cables that link control equipment to manual call points, automatic fire detectors and fire alarm devices, and that transmit signals to an alarm receiving centre. It is only less important in the case of interconnections between the fire alarm system and other equipment that are so arranged that failure of interconnecting cables during a fire would not lead to a dangerous condition (e.g. because the failure causes the other equipment to change state to that appropriate to the fire condition).

*It is not normally possible to predict, with any accuracy, those areas of a building in which fire can or cannot occur. At the design stage, the exact routes that cables will follow may also be unknown. Therefore to ensure that cables used for critical signal paths (see **3.13**) remain operational for an adequate duration, cables with an inherent ability to resist attack by fire need to be used throughout such critical signal paths.*

The integrity of the mains supply to the system is also regarded as essential, even though the system has a standby supply. Accordingly, mains supply circuits need to be adequately protected against the effects of fire.

Once a fire alarm signal occurs, fire alarm devices ought not to be dependent on a continued signal from any fire detector or manual call point. In large buildings and buildings with multi-stage alarm systems, the ability of the system to provide indications from further fire detectors and manual call points during the course of a fire may be of value to the fire service or may be essential to ensure that the need for "Evacuate" signals in additional alarm zones can be identified.

*In order to ensure satisfactory performance of cables when exposed to fire, cables conforming to the fire test requirements given in **26.2**d or **26.2**e), need to be used throughout the critical signal paths.*

 © BSI 15 October 2002

The tests are different from those incorporated in BS EN 60702-1, BS 7629-1, BS 7629-2 and BS 7846 which include tests for performance under fire conditions; the fire resistance requirements of these standards are expressed in terms of performance in the tests of IEC 60331 and BS 6387. In drafting this part of BS 5839, consideration was given to the suitability of these tests, and it is now considered that the temperatures, durations and methodology of the tests require revision for cables of fire alarm systems complying with this part of BS 5839.

Accordingly, the recommendations of this standard for the fire resistance of cables differ from the requirements of BS EN 60702-1, BS 7629 and BS 7846, which need not be applied for the purposes of complying with this standard. The recommendations of this standard are based on, but exceed, the requirements of BS EN 50200.

This standard makes recommendations for two levels of fire resistance of fire resisting cable systems, termed "standard" and "enhanced", according to the type of building and fire alarm system installed:

— the use of cables with "standard" fire resistance is recommended for general use;

— the use of cables with "enhanced" fire resistance is recommended for systems, in particular building types, in which cables might need to operate correctly during a fire for periods in excess of those normally required for single phase evacuation of a building. Examples are unsprinklered high rise buildings with phased evacuation arrangements and premises of such a nature or size that areas remote from the fire could continue to be occupied for a prolonged duration during a fire that might then damage cables serving parts of the fire alarm system in occupied areas.

The distinction between the two levels of performance is, therefore, made in this standard to enable designers and specifiers to specify "enhanced" performance cables in situations in which it is considered that a higher level of fire resistance is desired.

Cables capable of complying with the recommendations for "standard" fire resistance are expected to include some that have been commonly used for many years for circuits in fire alarm systems that must operate for a prolonged period during a fire, in accordance with BS 5839-1:1988, without any evidence from real fires that satisfaction of the objectives of a fire alarm system necessitates a higher performance. It is recognized, however, in this revision of BS 5839-1, that the level of fire resistance described as "enhanced" is desirable in certain systems in particular building types, although unnecessary for most systems. Cables complying with the recommendations for "enhanced" fire resistance are expected to include, amongst other types, some mineral insulated copper sheathed cables conforming to BS EN 60702-1.

The probability of disablement of any part of the fire alarm system as a result of mechanical damage to cables can be reduced by the use of sufficiently robust cables, careful selection of cable routes and by the provision of protection against mechanical damage in areas where cables are susceptible to mechanical damage. Monitoring of circuits does not ensure that cable faults will not occur, but is essential to minimize the time between occurrence and identification (and hence repair) of the fault. Monitoring of circuits and protection of cables against damage are, therefore, complementary precautions, rather than alternatives.

It is the responsibility of the designer to ensure that the electrical characteristics of the cables, including current carrying capacity and voltage drop, are suitable for the system. The choice of cable and routes selected need to take into account the need to avoid electromagnetic interference from other cables and sources of electromagnetic radiation, particularly in the case of systems in which cables are used for transmission of data (such as addressable device circuits). In the latter case, the cable selected also needs to be compatible with the characteristics of the data transmission e.g. speed and waveform, and remain so for an adequate length of time during the relevant exposure to fire for the category of cable.

The circuits of fire alarm systems need to be segregated from the cables of other circuits to minimize any potential for other circuits to cause malfunction of the fire alarm system arising from:

— breakdown of cable insulation of other circuits and/or fire alarm circuits;

— a fire caused by a fault on another circuit;

— electromagnetic interference to any fire alarm circuit as a result of the proximity of another circuit;

— damage resulting from the need for other circuits to be installed in, or removed from, ducts or trunking containing a fire alarm circuit.

In order to facilitate identification of fire alarm circuits, cables should preferably be red in colour, unless another form of colour coding is appropriate. By this means, the possible need for appropriate segregation can be identified, and there will be less likelihood of inadvertent manual interference with the circuits of fire alarm systems (e.g. during work on other electrical circuits).

26.2 Recommendations

The following recommendations are applicable.

a) The electrical characteristics of all cables, such as voltage drop, current carrying capacity, impedance and, where appropriate, ability to transmit data, should be suitable for the system.

b) Cables used for all parts of the critical signal paths (see **3.13**), and for the final circuit providing low voltage mains supply to the system, should comply with the recommendations of **26.2**d) or **26.2**e) and comprise one of the following:

1) mineral insulated copper sheathed cables, with an overall polymeric covering, conforming to BS EN 60702-1, with terminations conforming to BS EN 60702-2;

2) cables that conform to BS 7629;

3) cables that conform to BS 7846;

4) cables rated at 300/500 V (or greater) that provide the same degree of safety to that afforded by compliance with BS 7629.

c) Cable systems used for all parts of the critical signal paths, and for the low voltage mains supply to the system, should adequately resist the effects of fire. For most fire alarm systems, standard fire resisting cables [see **26.2**d)] should be considered to provide sufficient resistance to the effects of fire, with appropriate methods of support and jointing [see **26.2**g)].

For fire alarm systems for applications as listed below, cable systems comprising "enhanced" fire resisting cables [see **26.2**e)], with appropriate methods of support and jointing should generally be used [see **26.2**g)]:

1) in unsprinklered buildings (or parts of buildings) in which the fire strategy involves evacuation of occupants in four or more phases;

NOTE 1 In a building with a networked system (see Clause **24**), individual, self-contained fire alarm systems sometimes serve parts of the building that are evacuated in less than four phases, even though the entire building is evacuated in four or more phases. In such cases, cables of enhanced fire resistance need not be used for these systems, but there might be a need to use cables of enhanced fire resistance for the network [see Figure 14a) and Figure 14b)].

2) in unsprinklered buildings of greater than 30 m in height;

3) in unsprinklered premises and sites in which a fire in one area could affect cables of critical signal paths associated with areas remote from the fire, in which it is envisaged people will remain in occupation during the course of the fire [see Figure 14c)]. Examples may be large hospitals with central control equipment and progressive horizontal evacuation arrangements, and certain large industrial sites;

NOTE 2 If the single range of buildings shown in Figure 14c) were served by a networked system, and each of the independently evacuated sections shown were served by individual, self-contained fire alarm systems, cables of enhanced fire resistance would not be necessary except, in the case of the network cables, if required to satisfy the recommendations of Clause **24**.

4) in any other buildings in which the designer, specifier or regulatory authority, on the basis of a fire risk assessment that takes fire engineering considerations into account, considers that the use of enhanced fire resisting cables is necessary.

NOTE 3 Effects of fire include discharge of water from extinguishing systems or equipment and impact by falling objects.

NOTE 4 A cable system comprises the cables, the means by which cables are secured and the means by which cables are jointed.

NOTE 5 For the purpose of **26.2**c), a building should be regarded as sprinklered only if an automatic sprinkler installation complying with the recommendations of BS 5306-2 is provided throughout the building, except that the recommendations of BS 5306-2 for life safety installations need not be applied.

NOTE 6 In some fire engineering solutions used for complex buildings, a reduction in the normal level of other fire protection measures throughout the building may be acceptable to an enforcing authority provided an automatic fire detection system is installed. In such cases, an enforcing authority might or might not, as part of the fire engineering solution, require cables of enhanced fire resistance, and early consultation with the authorities responsible for enforcing fire safety legislation is strongly recommended (see Clause **6**).

d) Standard fire resisting cables should meet the PH 30 classification when tested in accordance with EN 50200 and maintain circuit integrity if exposed to the following test:

— a sample of the cable is simultaneously exposed to flame at a temperature of 830^{+40}_{0} °C and mechanical shock for 15 min, followed by simultaneous exposure to water spray and mechanical shock for a further 15 min.

 © BSI 15 October 2002

e) Enhanced fire resisting cables should meet the PH 120 classification when tested in accordance with EN 50200 and maintain circuit integrity if exposed to the following test:

— a sample of the cable is simultaneously exposed to flame at a temperature of 930^{+40}_{0} °C and mechanical shock for 60 min, followed by simultaneous exposure to water spray and mechanical shock for a further 60 min.

f) Methods of cable support should be such that circuit integrity will not be reduced below that afforded by the cable used, and should withstand a similar temperature and duration to that of the cable, while maintaining adequate support.

NOTE 7 In effect, this recommendation precludes the use of plastic cable clips, cable ties or trunking, where these products are the sole means of cable support.

g) Cables should be installed without external joints wherever practicable. All terminations and other accessories should be such as to minimize the probability of early failure in the event of fire. Other than in the case of joints within system components such as control equipment, manual call points, fire detectors and sounders, terminals used to joint cables should be constructed of materials that will withstand a similar temperature and duration to that of the cable. All joints, other than those within system components, should be enclosed within junction boxes, labelled with the words "FIRE ALARM" to avoid confusion with other services.

NOTE 8 At the time of drafting this standard, no definitive guidance can be given on the means for ensuring that the entire cable system, as opposed to the cable itself, can provide adequate resistance to the effects of fire. The manufacturer's recommendations should be followed.

h) Except in particularly arduous conditions, mineral insulated copper sheathed cables conforming to BS EN 60702 and steel wire armoured cables conforming to BS 7846 may be used throughout all parts of the system without additional mechanical protection. Other cables should be given mechanical protection in any areas in which physical damage or rodent attack is likely. Particular consideration should be given to all areas that are less than two metres above floor level; other than in relatively benign environments (e.g. offices, shops and similar premises) in which cable is clipped directly to robust construction, mechanical protection should be provided in these areas. Protection may be provided by laying cable on tray, protecting it by burying in the structure of the building, or by installation in conduit, ducting or trunking. Where particularly arduous conditions might be experienced (such as impact by forklift trucks or goods trolleys), additional, robust protection should be given to all cables by burying the cable in the structure of the building or installation in metal conduit or trunking.

i) Where conduit is used to satisfy the recommendations of **26.2**h), the conduit should conform to the relevant part of BS EN 50086. Any non-metallic trunking used in the system should conform to BS 4678-4.

j) All conductors should have a cross-sectional area of at least 1 $mm^{2.}$

k) To avoid the risk of mechanical damage to fire alarm cables, they should not be installed within the same conduit as the cables of other services. Where fire alarm cables share common trunking, a compartment of the trunking, separated from other compartments by a strong, rigid and continuous partition, should be reserved solely for fire alarm cables.

l) To avoid electromagnetic interference with fire alarm signals, any recommendations by the manufacturer of the fire alarm equipment in respect of separation of fire alarm cables from the cables of other services should be followed.

m) Where multicore cable is used for interconnection of fire alarm circuits, none of the conductors should be used for circuits other than those of the fire alarm system.

NOTE 9 This recommendation does not preclude the multiplexing of signals of other systems with those of the fire alarm system. Guidance on such integrated systems is given in BS 7807.

n) Fire alarm cables carrying power in excess of extra-low voltage should be segregated from extra-low voltage fire alarm circuits by use of cables complying with **26.2**b) and with **26.2**l). In particular, the mains supply cable to any control, indicating or power supply equipment should not enter the equipment through the same cable entry as cables carrying extra-low voltage. Within the equipment, low voltage and extra-low voltage cables should be kept separate to the extent practicable.

o) All fire alarm cables should be of a single, common colour that is not used for cables of general electrical services in the building, to enable these cables to be distinguished from those of other circuits.

NOTE 10 The colour red is preferred.

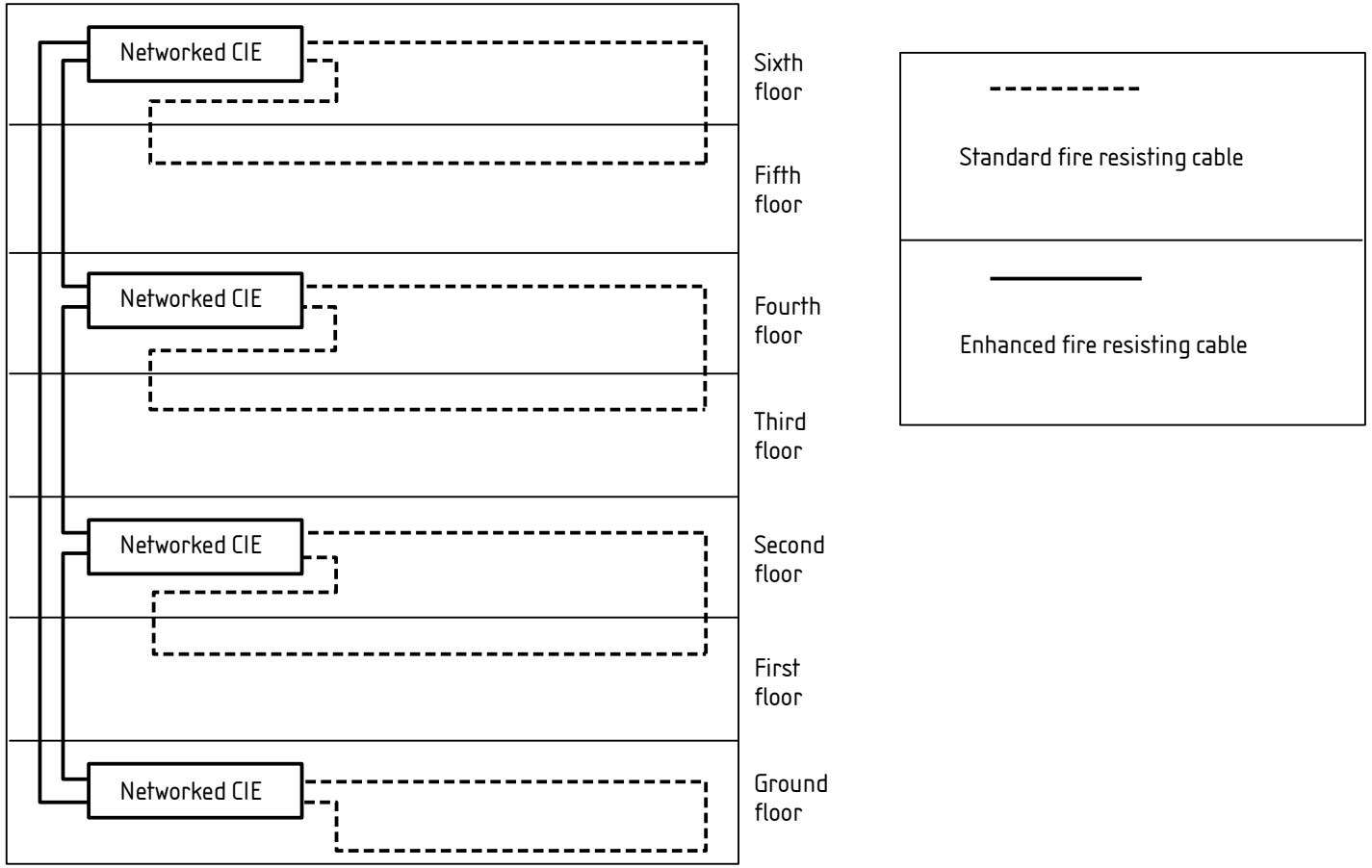

Figure 14a) — Example of a networked fire alarm system in a multi-storey building, showing standard cable grade for local wiring and enhanced grade for network cable [see **26.2**c)]

© BSI 15 October 2002

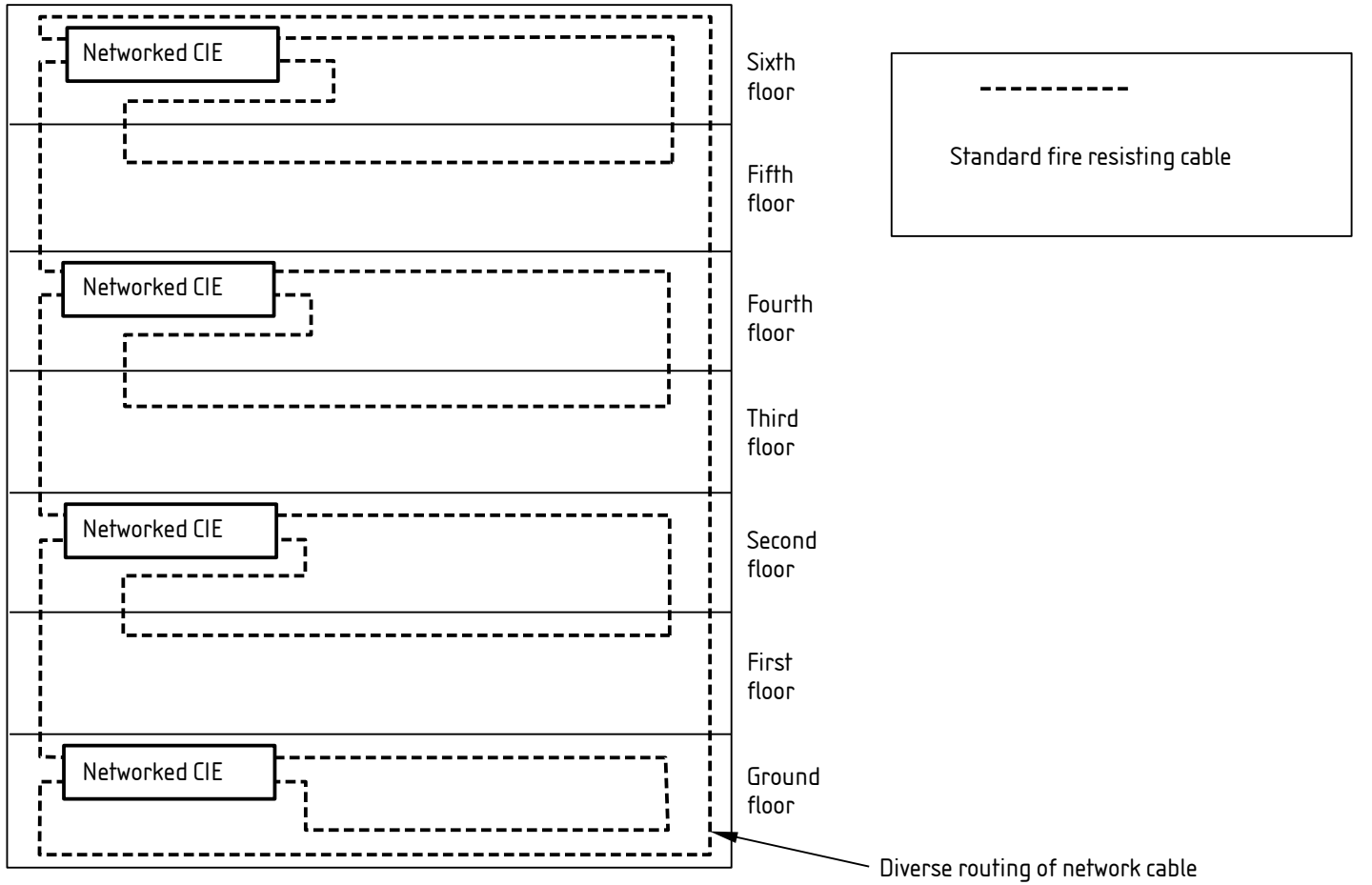

Figure 14b) — Example of a networked fire alarm system in a multi-storey building, showing standard cable grade throughout provided that there is diverse routing of the network cable loop (see **24.2**)

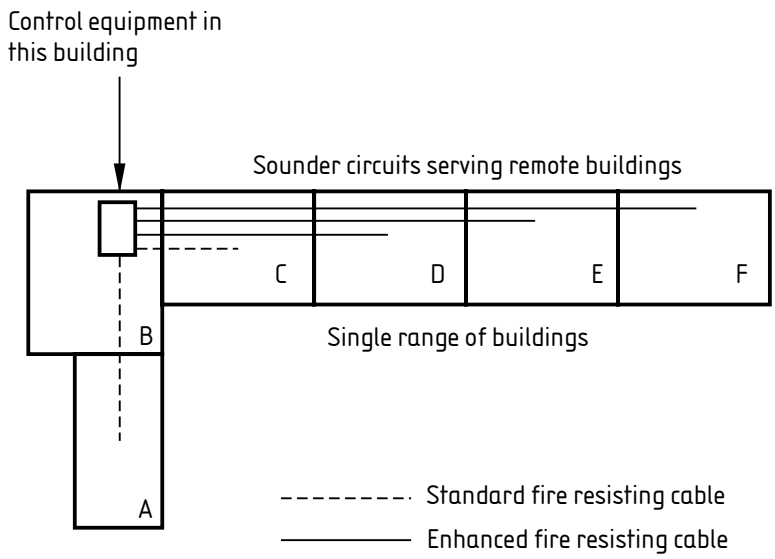

Figure 14c) — Use of enhanced fire resisting cable in certain large sites [see **26.2**c)]

27 Radio-linked systems

27.1 Commentary

Some of the recommendations of this standard, applicable to wired systems, are unsuitable for, or cannot be applied to, radio-linked systems. These include, in particular, those relating to power supplies and fault monitoring. Additional recommendations apply to radio-linked systems in order to address the integrity and performance of the radio communications link between components and the control and indicating equipment.

In practice, no systems can have total reliability, but one of the objectives of good system design is to reduce the probability of the system being inoperative in the area of a fire when the fire starts. It is useful that the advantages and disadvantages between the two technologies, hardwired and radio-linked, are different because this allows for a system to be installed that suits the site. Great care needs to be taken when assessing a site and choosing the technology to use, as neither the radio nor hardwired system is singularly suitable for every site.

Components of a system interconnected by radio-links may include fire alarm devices, such as fire alarm sounders, as well as detectors and manual call points. However, exercising the fire system with testing and evacuation drills in excess of those recommended by the manufacturer can reduce the life of the radio-linked fire alarm sounder batteries. Automatic silencing of radio-linked sounders is sometimes employed to overcome the potential for undue discharge of sounder batteries. However, sounders with this facility need to reactivate with any new fire or phased evacuation command. Such a facility ought not to impair the system's ability to provide an adequate audible warning to the occupants of the building in the event of fire.

*Other components of a radio-linked system may include radio relay units, which are installed remote from the control and indicating equipment so as to extend the range of the system. Where such relay units are separate control and indicating panels, this is a form of networked system (see Clause **24**).*

Radio communications may also be used to link a small number of detectors and other components to what is essentially a wired system. The recommendations of this standard apply equally to integral radio-linked systems of this nature.

 © BSI 15 October 2002

27.2 Recommendations

The following recommendations are applicable.

a) In the absence of any relevant British, European or International Standard, components of a radio-linked system should comply with the Loss Prevention Certificate Board test standard, LPS 1257.

b) Radio-linked systems should comply with all recommendations of this standard except that:

1) all radio-linked components should be supplied from at least two independent power supplies. These can be either:

i) the normal mains supply plus a reserve battery (primary or continuously charged secondary); or

ii) a primary battery plus a second primary battery; or

iii) a primary battery plus a secondary battery.

NOTE Where primary batteries are specified, capacitors with an appropriate specification may be used as an alternative.

2) components, other than control and indicating equipment, may utilize batteries to provide the normal power supply;

3) power supplies incorporating one or more primary batteries should give at least 30 days warning of impending failure of each battery. This should be indicated as a low battery warning condition at the control and indicating equipment;

4) at the point at which the power supply(ies) to any radio-linked component can maintain the component in normal operation for no more than seven days, and, in addition, in the case of fire alarm devices, 30 min in the alarm condition, a fault warning should be given at the control and indicating equipment;

5) primary power supplies should have a minimum, normal operational life of three years over the temperature range of +15 °C to +35 °C before the low power condition is signalled;

6) any fault giving rise to loss of communication with a radio-linked component should be indicated at the control and indicating equipment within two hours of occurrence of the fault.

c) Cables of antennae that are external to components of a radio-linked system should be monitored for open and short circuits. A fault condition should be given at the control and indicating equipment within 100 s of the occurrence of such a condition.

d) Cables of antennae that are external to components that form part of the critical signal path should satisfy the recommendations of **26.2**. However, cables that do not comply with **26.2**b) may be used provided they are routed through areas of low fire risk, or are protected against exposure to fire by burial in at least 12 mm of plaster or by separation from any fire risk by materials that would afford a fire resistance of at least 30 min if tested in accordance with the relevant part of BS 476.

e) Antennae should be so arranged that special tools are required for disconnection or removal of the outer housing.

f) Facilities for automatic silencing of radio-linked fire alarm sounders should comply with the recommendations of **16.2.1**h).

g) Unless the visual indication at the detector of initiation of a fire alarm signal is manually reset at the control panel, it should remain illuminated for not less than 20 min after initiation. The illumination may then automatically extinguish.

h) A fault indication should be given within 100 s at the CIE if no valid radio transmissions are received from any of the radio fire devices for two hours.

i) After 30 s of continuous interference to the transmitted signal that can compromise the performance of the fire detection and alarm system, a fault indication should be given at the CIE within a further 100 s.

© BSI 15 October 2002

j) Installation of a radio-linked system should only take place after a comprehensive radio survey has been undertaken to ascertain the following:

1) there are no other sources of radio transmission that could interfere with, or block radio communication between the control and indicating equipment and other components of the system;

2) there is adequate signal strength for communication both to and from components as appropriate in all areas of the building(s) in which radio-linked components are to be located. This should take into account the minimum acceptable signal level defined by the manufacturer in respect of the level of background radio "noise" at the time of the survey;

3) where the system is networked it should be established that the communication conditions described in item 2) are achieved throughout the network;

4) records of signal strength readings for each radio device taken at the time of the survey, and of the background noise level, should be kept for future reference.

k) Only radio survey test equipment that has been approved by the manufacturer and regularly calibrated should be used to carry out the survey. A record of the date of calibration and the date when the next calibration is due should be marked on the survey equipment.

l) At the time of commissioning and after the installation of all equipment including remote antenna(e), the following records relating to the radio data should be recorded:

1) the system coding (i.e. system address) which should where possible be unique to avoid the possibility of interference from similar systems on the same frequency;

2) details of the signal level being received at each of the receiver units. This data should include the received signal levels of all the radio devices and the background noise level. In the case of a networked system (i.e. multiple panel system), this should also include the signal levels for the radio-links between panels. In addition to other servicing recommendations in other parts of this standard, this should be undertaken at each routine service visit.

m) The signal levels recorded should be within the specifications set by the manufacturer of the radio system. If not within the specification, appropriate remedial action should be undertaken;

n) A copy of the signal levels should be kept on site with the system log book.

o) Where a network of CIEs is used, the system specification should define whether there is to be:

1) one master CIE at which all controls and indications are available, with other panels not having controls or indications; or

2) a supervisory CIE at which essential indications are available and possibly some controls are also available, with other CIEs also having some controls and indications.

Dependent upon the choice of system configuration, CIEs with an appropriate specification should be selected.

28 Electromagnetic compatibility

28.1 Commentary

Particular care needs to be taken in the design and installation of the fire alarm system to avoid electromagnetic interference, particularly received from, but also transmitted to, other equipment. Electromagnetic interference to a fire alarm system can result from mobile telephones, radio transmitters, other equipment used within the building, lightning and power transients. It is known that mal-performance of some fire alarm systems has occurred owing to electromagnetic interference as a result of close proximity of fire alarm cables to power cables with high current, inductive loads. The extent to which this might occur depends on a number of factors including:

— *the susceptibility of the particular fire alarm equipment to electromagnetic interference;*

— *the level of screening afforded by the cable;*

— *the separation distance between the fire alarm cables and the cables of other services.*

 © BSI 15 October 2002

*All cables recommended in **26.2**b) provide a degree of screening, but care needs to be taken to ensure good installation practice in, for example, terminations, and that where practicable, fire alarm cables do not run unnecessarily long distances (say, more than 35 m in aggregate) in close proximity to high current power cables, particularly if these serve high inductive loads.*

Electromagnetic interference can be reduced where there is a metal partition between the fire alarm cables and the power cables (as in the case of compartmented trunking). Achievement of separation between fire alarm cables and the cables of other services throughout an entire installation might not be practicable; for example, economy of installation might dictate that fire alarm cables share common tray or ducts with cables of other services. Care should, however, be taken to minimize the extent to which separation is not maintained, particularly in addressable and networked systems, unless guidance from the system manufacturer indicates that separation is unnecessary; the extent will be minimized if, for example, fire alarm cables always cross the cables of other services at right angles.

More definitive guidance cannot be offered in this standard, but it is necessary to ensure compliance with any more specific recommendations of the fire alarm equipment manufacturer.

28.2 Recommendations

The following recommendations are applicable.

a) Fire alarm systems should be so designed and installed that they do not cause, and are not unduly susceptible to, electromagnetic interference, in accordance with the Electromagnetic Compatibility Regulations 1992 (as amended to date), which implement the EMC Directive 89/336/EEC (as amended).

b) In order to comply with the Regulations, there should be compliance with, at least, the following recommendations, although these might not, alone, be sufficient to ensure compliance:

1) every system component should satisfy the relevant requirements of the product standard for that component in respect of electromagnetic capability (see Clause **11**);

2) cables should be segregated in accordance with the recommendations of **26.2**l) and **26.2**n);

3) installation workmanship should comply with the relevant recommendations of Section 4, particularly in relation to quality of terminations and continuity of screens. For mineral insulated copper sheathed cables, terminations of screens should be effective around the entire 360° of the screen. For other cables, care should be taken to ensure that the screen of the cable is continued to the appropriate terminal in the control panel or device. This is normally achieved using cables where an uninsulated circuit protective conductor is in constant contact with the screen throughout its length;

4) any cable specifications stipulated by the manufacturer as important for the compliance with the requirements of the EMC Directive should be adhered to. However, cables not compliant with the recommendations of this standard should only be used with the prior agreement of all interested parties and should be recorded as a variation;

5) correct earthing of equipment is vital for adequate EMC performance as well as electrical safety. Note should be taken of the recommendations of Clause **29**, in particular respect of the differences between protective and functional earth connections;

6) exposure of the cores outside of the screen should be kept to a minimum, consistent with practical installation requirements;

7) where the manufacturers of the control equipment advise that the system is sensitive to multiple screen earths for each circuit, then their instructions in respect of these should be followed (see Clause **29**);

8) where required, the screen should have continuity throughout the whole circuit;

9) where it is necessary to cross fire alarm system cables with those that can potentially cause interference, the cables should be crossed at right angles.

29 Electrical safety

29.1 Commentary

A fire alarm system is a special form of electrical installation, much of which operates at extra low voltage (ELV), and the recommendations of BS 7671 regarding safety and earthing are applicable.

It is important to understand that mains supplied equipment normally has a circuit protective conductor (CPC) to provide a protective earth. Some electrical equipment, such as double insulated, does not have a protective earth because of inherent safety built into the design but, in general, low voltage mains supplied (LV) fire alarm equipment does require a protective earth.

ELV systems may have one or both of the following types of earth connection:

a) protective earth (PE), intended to protect from shock hazard anyone touching exposed conductive parts of the installation. In the event of a fault, the CPC is intended to conduct the fault current to earth, causing a final circuit protective device to operate and disconnect the supply, so preventing shock hazard;

*b) functional earth (FE), an earth provided for purposes not necessarily related to safety, but primarily a screen for electromagnetic compatibility (EMC) purposes (see Clause **28**). The FE needs to have continuity throughout all relevant circuits. The FE needs to be connected according to the fire alarm equipment manufacturer's instructions. There may be more than one FE, each associated with, for example a loop, a radial circuit or an interface. Unless the manufacturer advises otherwise, each FE circuit needs to be connected to the PE at one place only. The FE might not necessarily meet the requirements of a CPC. An example of FE for loop wiring is shown in Figure 15a). Note that, in this example, the FE or screen for the loop is terminated only at the CIE, avoiding fortuitous earths and retaining separation from the FE of the ancillary circuit. An example of FE for a network is shown in Figure 15b). Note that in this example, the FE does not interconnect two equipments, but is terminated at one only. The whole network in this example would be made up in this way.*

If, according to the manufacturer's instructions, the FE and PE may be or are intended to be the same (as would normally be the case when mineral insulated copper sheathed cable is used), it may be acceptable to connect the screen to the earth at more than one point.

Particular care is necessary to ensure the adequacy of earthing and of protection against shock from exposed metal parts. Expert advice (for example from the equipment manufacturers) might be necessary in complex sites in which different earth potentials exist, so that electrical safety is not compromised and circulating currents are avoided.

*The designer also needs to ensure that the system can be maintained safely. The mains (LV) power supply for each equipment needs to have a double pole isolation facility nearby. Maintenance is then safe from shock hazard. See **25.2**.*

Fire alarm power supplies need to be compliant with BS EN 54-4. If terminals for ELV circuits can be exposed, when for example a detector is removed from its base, the fire alarm power supply needs to incorporate a safety isolating transformer so that the terminals are safe to touch in dry conditions.

Addressable circuits are often sensitive to circulating currents arising from multiple earths. Non-addressable circuits are usually less sensitive and multiple earths may be tolerated.

*Segregation needs to be in accordance with the recommendations **26.2**l) and Clause **28** and by using cable suitable for the highest relevant voltage in the fire alarm system and in the other circuits relevant to the segregation.*

 © BSI 15 October 2002

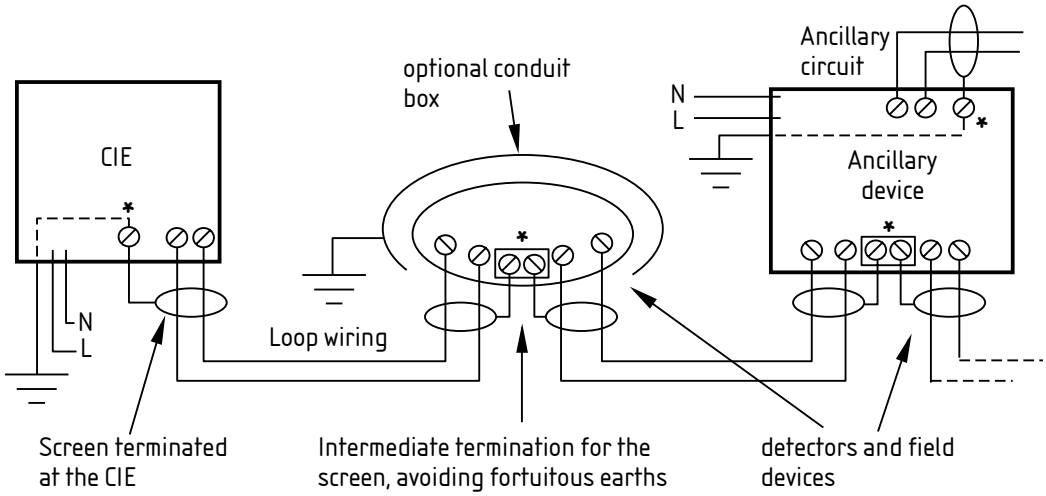

* Terminals provided by the equipment manufacturer for terminating the screen

NOTE If the manufacturer's instructions differ from this example, they should be followed.

Figure 15a) — Example of system loop wiring

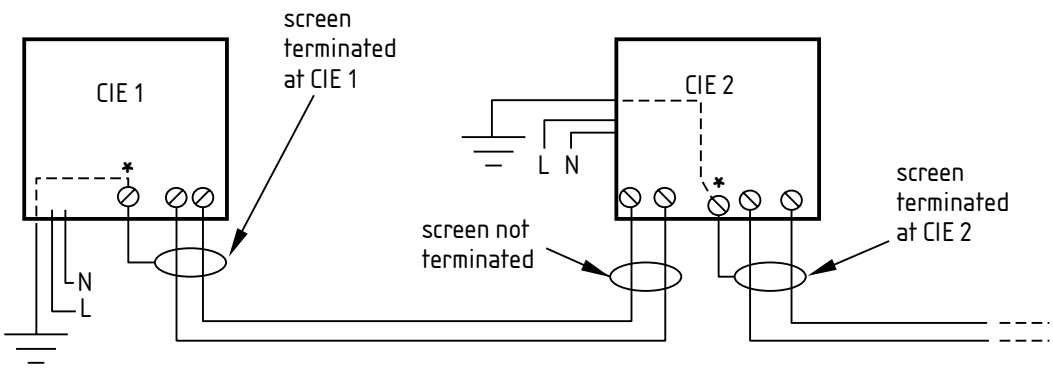

* Terminals provided by the equipment manufacturer for terminating the screen

NOTE If the manufacturer's instructions differ from this example, they should be followed.

Figure 15b) — Example of network conditions

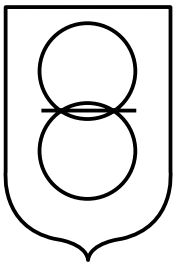

Figure 16 — Appropriate marking for the transformer, the power supply housing or the internal power sub-assembly enclosure to denote the use of a safety isolating transformer

29.2 Recommendations

The following recommendations are applicable.

a) The system design should be such as to satisfy the relevant requirements of BS 7671. In particular, CPCs should be adequately rated.

b) The CIE manufacturer's instructions or product marking should be followed, particularly in respect of earthing arrangements.

c) LV and ELV circuits should be segregated throughout in accordance with **26.2**n) and Clause **28** of this standard. In particular, if any ELV fire alarm cables share the same wiring containment with other cables, the cable insulation of the fire alarm cables should be rated for the highest voltage.

d) For ELV circuits with removable components (e.g. detectors or parts of detectors) that expose to touch conductive circuit parts at ELV potential, the following applies.

1) All relevant power supplies for the fire detection and alarm system should conform to BS EN 54-4 and incorporate safety isolating transformers conforming to BS EN 61558. The transformer, the power supply housing or the internal power supply sub-assembly enclosure, should be marked accordingly with the appropriate symbol. The marking should be visible and easily legible when inspecting or opening the equipment (e.g. routine servicing).

NOTE 1 Safety isolating transformers are not a requirement in BS EN 54-4, so they have been included in this standard for reasons of electrical safety.

NOTE 2 The appropriate marking given in BS EN 61558 (parts 2 to 6 and 2 to 17) is a shield enclosing two overlapping circles with a line through the overlapping parts; see Figure 16. There are enhancements on the safety isolating transformer symbol, but the symbol shown in Figure 16 is the basic format and there may be additional parts to the symbol such as an *F* near the shield or lines at the bottom of the lower circle.

2) In dry conditions, fire detectors do not have to be locked into their bases.

3) In areas where conditions are wet, the arrangement should be one or more of the following:

— circuit voltages are less than 15 V ripple free d.c. or 6 V a.c. rms;

— a tool or special technique is necessary to remove parts exposing ELV parts;

— the parts are positioned out of reach of persons other than authorised maintenance personnel.

NOTE 3 Wet areas include the following:

— locations containing a bathtub or shower basin;

— swimming pools;

— hot air saunas;

— agricultural and horticultural premises;

— abattoirs, cold stores and certain food preparation areas.

e) Means should be provided for double pole isolation of the mains supply to all parts of the system; the isolation facilities should be suitably sited, in the vicinity of the equipment served, for use by maintenance technicians without the need for access to remote parts of the building. It should be possible to lock the facilities in both the normal and isolate positions to prevent unauthorized use. See Clause **25**.

 © BSI 15 October 2002

Section 3. Limitation of false alarms

General

30 Responsibility for limitation of false alarms

30.1 Commentary

False alarms cause disruption to the normal operation of business and create a drain on fire service resources. False alarms can even seriously prejudice the safety of occupants, who might not react correctly when the system responds to a real fire if they have recently experienced a number of false alarms.

Since the publication of the previous edition of this standard, false alarms generated by fire alarm systems have continued to increase steadily in number. In 2000, fire services in the United Kingdom attended over 250 000 such false alarms. This level of false alarms is no longer regarded as acceptable by central government, fire services or the committee responsible for this part of BS 5839. Accordingly, in this part of BS 5839, significant importance is attached to the limitation of false alarms from the fire alarm system.

Responsibility for limitation of false alarms rests with every party involved in the specification, design, installation, commissioning, management at operational level and maintenance of the fire alarm system. The major part of this responsibility rests with the designer, but it is important that enforcing authorities and insurers have a good knowledge of the guidance contained in this section, so that requirements for forms of automatic fire detection, which, realistically, are unsuitable for the conditions in the building, are not imposed.

The role of the installer is simply to install the system in accordance with the requirements of the designer. However, where, during installation, an installer identifies conditions in the building (e.g. environmental conditions) that might result in an unacceptable rate of false alarms, the designer, purchaser or user needs to be informed, so that the need for modification of the design can be considered. Any installer purporting to have specialist capability in installation of fire alarm systems needs to have a good understanding of the guidance contained in this section.

*At commissioning (see Clause **39**), a special check needs to be carried out to ensure that there is no obvious potential for the system to generate an unacceptable rate of false alarms.*

Where there is cause for concern regarding possible potential for false alarms that is not definite enough to warrant action at commissioning, this needs to be recorded so that particular attention can be given to the matter in examining the false alarm record at the time of the first (and, if necessary, subsequent) service visits.

Any party responsible for accepting a fire alarm system needs to ensure that they are satisfied that the ultimate user is aware of the need, and means, for limiting false alarms. Verification of compliance with this standard includes verification that suitable steps have been taken by all parties to ensure that false alarms can be limited as far as reasonably practicable.

Once a compliant system has been handed over to the user, it is incumbent on the user to ensure that the system and the building itself are suitably managed to avoid unnecessary false alarms. Where an unacceptably high rate of false alarms does occur, it is the responsibility of the user to ensure that appropriate steps are taken to reduce the rate at which they occur. It is also the responsibility of the servicing organization to consider the recorded false alarm experience on each occasion that the system is serviced, so that unacceptable rates of false alarms can be identified and that appropriate advice can be given to the user.

Systems in which the parties responsible have not taken adequate care to limit false alarms, and systems that produce unacceptably high rates of false alarms, need to be regarded as non-compliant with this part of BS 5839.

30.2 Recommendations

The following recommendations are applicable.

a) When imposing requirements for automatic fire detection, enforcing authorities and property insurers should take the guidance contained in this section into account, so that, subject to the overriding need for adequate protection of life and/or property, the form of detection specified does not have the potential to create an unacceptable rate of false alarms.

b) The system designer should ensure that system design takes account of the guidance contained in this section. As evidence of compliance with this recommendation, the measures incorporated within the design to limit false alarms should be recorded on the design certificate (see Annex G).

c) Where an installer identifies any circumstances that might lead to a high rate of false alarms, the designer, purchaser or user should be informed accordingly [see also **7.2**b)].

d) At commissioning, a check should be carried out to ensure that there is no obvious potential for an unacceptable rate of false alarms. As evidence of compliance with this recommendation, the completion of the check should be recorded on the commissioning certificate, along with any potential false alarm problems that should be subject to further consideration at the time of service visits.

e) The designer and the supplier of the system should jointly provide the user (or a suitable representative of the user) with sufficient information to enable a user who is unfamiliar with the technology of fire alarm systems to limit the rate of false alarms. Any person responsible for acceptance of the system (see Clause **42**) should confirm that this information has been provided to the user.

f) Any person responsible for verification of the compliance of a system with this part of BS 5839 (see Clause **43**) should verify, as far as reasonably practicable, that adequate account has been taken of this section in the design, installation and commissioning of the system.

g) The user should arrange for suitable investigation and, if appropriate, action to be taken on every occasion that a false alarm occurs. This may, for example, comprise managerial changes within the building, modifications to the fire alarm system or an investigation by the organization that maintains the system.

h) The user should record appropriate details regarding every false alarm that occurs. Information recorded should include the following:

— date and time;

— identity and location of device (if known);

— category of false alarm (if known) (see **31.2**);

— reason for false alarm (if known);

— activity in the area (if the reason for the false alarm is unknown);

— action taken;

— the person responsible for recording the information.

i) At the time of every service visit, the system false alarm record should be checked carefully to determine the following:

— The rate of false alarms during the previous 12 months, expressed as number of false alarms per 100 detectors per annum (the rate should be recorded in the log book by the service technician);

— whether, since the time of the previous service visit, two or more false alarms, other than false alarms with good intent (see **3.17**), have arisen from any single manual call point or fire detector (or detector location);

— whether any persistent cause of false alarms can be identified.

 © BSI 15 October 2002

j) At least, a preliminary investigation should be carried out as part of the service work if any of the following apply:

1) the rate of false alarms over the previous 12 months has exceeded one false alarm per 25 detectors per annum;

2) more than 10 false alarms have occurred since the time of the previous service visit (i.e. typically, within the previous 6 months);

3) two or more false alarms (other than false alarms with good intent) have arisen from any single manual call point or fire detector (or detector location) since the time of the last service visit;

4) any persistent cause of false alarms is identified.

The purpose of the preliminary investigation is to determine whether any action could be taken to reduce the potential for false alarms; the user should be informed of the outcome of the investigation and be given appropriate advice, including advice regarding the need for a more in-depth investigation (see **32.2**).

31 Categories of false alarms

31.1 Commentary

*It is a common misconception that most false alarms arise from faults in equipment. In fact, most false alarms arise from a combination of environmental influences, fire-like phenomena, inappropriate action by people in the building and accidental damage. The term "unwanted alarms" (see **3.17**) is now used to describe this latter group of false alarms, to distinguish these false alarms from those arising from malfunction of equipment, which are now described as "equipment false alarms". Two further categories of false alarms are "malicious false alarms", arising from malicious action, and false alarms with good intent involving genuine belief by a person that there is a fire (see **3.17**).*

In order for any investigation of false alarms to be successful, and for appropriate action to be taken on false alarms, it is important that false alarm records record the category of false alarm whenever this can be accurately determined.

31.2 Recommendations

When false alarms are recorded by the user [see **30.2**h)], the category of false alarm (if known) should also be recorded. Where any doubt exists, the cause should be recorded as "unknown" (e.g. it should not be assumed that, in the absence of other information, a false alarm must have arisen from an equipment fault).

32 Acceptable rate of false alarms

32.1 Commentary

From the point of view of the user and the fire service, any false alarm is undesirable. Nevertheless, it needs to be accepted that, particularly in installations that incorporate a large number of automatic fire detectors, complete elimination of false alarms is impossible. From time to time, events will occur that give rise to a false alarm. The objective of all parties involved, from specification and design to everyday use of the system, is to minimize the number of false alarms that occur.

*It follows, therefore, that there is a need to define an "acceptable" rate of false alarms. In the previous edition of this standard, it was recommended that a special investigation take place if the rate of false alarms exceeded one false alarm per 10 detectors per annum. This rate is not now ever to be regarded as acceptable. As recommended in **30.2**j), the service organization needs to make, at least, a preliminary investigation if, at the time of a service visit, it is determined that the rate of false alarms in the previous 12 months has exceeded one false alarm per 25 detectors per annum. The user needs to instigate an in- depth special investigation at an even higher rate. This may be undertaken by the servicing organization, the manufacturer of the system or a suitably qualified third-party (such as consultants).*

*On a more routine basis, false alarm rates need to be monitored periodically by the "responsible person" (see Clause **47**). Little information is available as to the "average" rate of false alarms from fire alarm systems, and a benchmark, against which false alarm performance can be judged, cannot be defined with any real precision.*

For any given system, the "average" rate of false alarms will depend on many factors, including:

— the number of automatic fire detectors;

— the environment in which automatic fire detectors are installed;

— the activities in the building;

— the degree of control over the activities of third parties (such as contractors);

— the extent to which strong electromagnetic fields are present;

— the level of occupation of the building (e.g. day shift or 24 h working);

— the propensity for malicious action.

The number of false alarms that can be anticipated is virtually proportional to the number of automatic fire detectors installed. The constant of proportionality will normally be highest where the fire detectors are smoke detectors. Systems incorporating only manual call points or manual call points in conjunction with heat detectors should not normally produce many false alarms; the regular occurrence of false alarms in such systems warrants particular attention by the user and/or servicing organization.

Experience suggests that, in a relatively benign environment, in which there is no tendency for dust, fumes or insects to occur, and in which there is a good standard of management, false alarm rates equal to, or less than, one false alarm per 100 detectors per annum are possible, even if the proportion of smoke detectors is very high. On industrial sites with shift working, this figure should be regarded as a possible target, but not a norm; a figure of one false alarm per 75 detectors per annum is probably a more realistic expectation.

In general, false alarm rates of one false alarm per 50 detectors per annum can be readily achievable with modern technology systems, unless there are severe environmental challenges for automatic fire detection; where such challenges occur, consideration needs to be given to whether automatic fire detection is appropriate and/or whether it is necessary for a signal from a single automatic fire detector (particularly a smoke detector) to initiate an evacuation or result in summoning of the fire service.

It follows that, while a rate of one false alarm per 50 detectors per annum might represent quite reasonable (and, hence, "acceptable") performance on an industrial site with processes that create an unfavourable environment for automatic fire detectors, this rate might not be regarded as acceptable in a controlled environment, such as a computer room.

In general, in systems with more than 40 automatic fire detectors, a rate of more than one false alarm per 20 detectors per annum is never to be regarded as acceptable, particularly if the false alarms result in evacuation of the premises or summoning of the fire service. In premises with 40 automatic fire detectors or less, more than two false alarms per annum is to be regarded as unacceptable.

Notwithstanding the above, the user has a duty to mitigate all instances of false alarm.

In the future, it is possible that a fire authority will take appropriate action if a fire alarm system consistently produces false alarms at such unacceptable rates.

32.2 Recommendations

The following recommendations are applicable.

a) In systems that incorporate more than 40 automatic fire detectors, the user should instigate an in-depth investigation by suitable specialists if, in any rolling period of 12 months, either:

1) the average rate of false alarms exceeds one false alarm per 20 detectors per annum; or

2) more than two false alarms are initiated by any single manual call point or automatic fire detector (or detector location).

b) In systems that incorporate 40 or less automatic fire detectors, an in-depth investigation, as described in **32.2**a), should be instigated by the user if, in any rolling 12 month period, more than two false alarms occur.

 © BSI 15 October 2002

33 Causes of false alarms

33.1 Commentary

*In many premises, most false alarms take the form of unwanted alarms (see **3.17**). Recognized causes of unwanted alarms (albeit, in some cases only from certain types of automatic fire detector), are as follows:*

— *fumes from cooking processes (including toasting of bread);*

— *steam (from bathrooms, shower rooms and industrial processes);*

— *tobacco smoke;*

— *dust (whether built up over a period of time or released from an industrial process);*

— *insects;*

— *aerosol spray (e.g. deodorants and cleaning fluids);*

— *high air velocities;*

— *smoke from sources other than a fire in the building (e.g. from an external bonfire);*

— *cutting, welding and similar "hot work";*

— *processes that produce smoke or flame (e.g. flambéing of food);*

— *cosmetic smoke (e.g. in discotheques and theatres);*

— *incense;*

— *candles;*

— *electromagnetic interference;*

— *high humidity;*

— *water ingress;*

— *substantial fluctuation in temperature;*

— *accidental damage (particularly to manual call points);*

— *testing or maintenance of the system, without appropriate disablement of the system or warning to building occupants and/or an alarm receiving centre;*

— *pressure surges on water mains serving automatic sprinkler systems that are interfaced with the fire alarm system.*

Most of these causes can be minimized by appropriate choice of detection system and suitable management arrangements.

*False alarms can also arise from faults in equipment ("equipment false alarms"). These can be minimized by choice of good quality equipment that satisfies relevant standards (see Clause **11**), has third-party certification and has been regularly serviced and maintained in accordance with Section **6** of this standard.*

*Malicious false alarms (see **3.17**) tend to occur with most frequency in certain premises to which the public resort in large numbers, such as shopping centres, places of entertainment, public car parks and sports centres, and in educational establishments, such as universities and schools. Mainly, malicious operation of manual call points is involved. Manual call points in certain public houses can also be subject to malicious operation. Where there is significant potential for malicious false alarms, or an existing system is subject to these, consideration need to be given to the locations of manual call points and to the possible use of two-action devices [see **20.2**j)].*

*Little can be done to prevent false alarms with good intent (see **3.17**). These are unlikely to present a significant problem, and it is important that people are never discouraged from operating a manual call point if they suspect that there might be a fire.*

33.2 Recommendations

Any person responsible for specification, design, commissioning or maintenance of fire alarm systems should be conversant with the major causes of false alarms. Particular care should be taken to limit the potential for unwanted alarms and, in certain vulnerable premises, malicious false alarms.

34 Design process for limitation of false alarms

34.1 Commentary

The majority of false alarms arise from automatic fire detectors, particularly smoke detectors, rather than manual call points. Although, in most circumstances, automatic fire detection greatly enhances the level of fire safety, there are a few situations in which it is of little benefit; in these circumstances, the installation of automatic fire detectors simply creates potential for unnecessary false alarms, and any risk assessment needs to take into account the benefit of automatic fire detection compared with the potential for false alarms. Examples include simple buildings in which all areas are occupied on a 24 h basis (e.g. certain small factories).

Normally, it is inappropriate to avoid automatic fire detection simply to avoid false alarms. Limitation of false alarms will normally involve, firstly, identification of the likely conditions that could give rise to false alarms from the form of detection proposed. By suitable choice of system type, detection principle and detector siting, in most cases the likely frequency of false alarms will be acceptable.

*However, the designer needs to, at the design stage, make a judgement as to the likely frequency. This need not be quantitative in all cases, but may be expressed qualitatively (e.g. low, medium, high). Alternatively, in very large systems with many smoke detectors, it might be of value for the designer to give the user some very approximate rate at which false alarms could occur; the information contained in Clause **32** may form a basis for estimation. If this frequency is unacceptable, whether on the basis of the guidance in Clause **32** or on the basis of consultations with the user or purchaser, additional "special" measures might need to be incorporated into the design to further limit false alarms or their effects.*

*"Special" measures might involve a change in detection principle from that originally proposed, a change in system type to a more complex, sophisticated system, or a form of "filtering" false alarms so that those that do occur do not lead to evacuation of the building or summoning of the fire service. It is essential, however, that any such "special" measures do not compromise the protection afforded by the system to a degree that its objectives (whether in respect of protection of life, protection of property, protection against business interruption or protection of the environment) are no longer satisfied; in the case of some measures, agreement of the interested parties (see Clause **6**) might be necessary.*

Each major area of the building needs to be considered separately and the design process may need to be iterative, in that, if the initial design is not adequately robust in its limitation of false alarms, further measures might need to be considered until the potential for false alarms is suitably minimized. A schematic of the recommended design process is shown in Annex E.

34.2 Recommendations

The following recommendations are applicable:

a) at the design stage of every system, there should be formal consideration of the potential for false alarms, with a view to confirming that design is such that the frequency of false alarms is likely to be acceptable;

b) any relevant design information regarding false alarms should be recorded and documented in accordance with the recommendations of Clause **40**.

35 Measures to limit false alarms

35.1 Commentary

In principle, measures to limit false alarms may be divided into eight groups:

— *siting and selection of manual call points;*

— *selection and siting of automatic fire detectors;*

— *selection of system type;*

— *protection against electromagnetic interference;*

— *performance monitoring of newly commissioned systems;*

— *filtering measures;*

— *system management;*

— *regular servicing and maintenance.*

 © BSI 15 October 2002

35.2 Recommendations

35.2.1 *General*

The following recommendations constitute general guidelines that should be taken into account by any parties responsible for specification, design, commissioning or verification of a fire alarm system, and by maintenance organizations at the time of consideration of false alarm problems. The recommendations should not, however, be regarded as definitive "rules".

35.2.2 *Recommendations for siting and selection of manual call points*

The following recommendations are applicable.

a) Manual call points should not be sited where they are likely to be exposed to accidental damage (e.g. by normal operations in the building, trolleys, or forklift trucks). Where compliance with **20.2** makes such siting essential, suitable guards should be provided to prevent impact on the manual call points. Examples include manual call points located adjacent to fire exits from sports halls and gymnasia, in which ball sports are played. In some cases, subject to the approval of the relevant enforcing authorities, hinged covers may be provided for this purpose but, as the manual call points would not then comply with **11.2**a), this should be recorded as a variation on the system design certificate.

b) In areas in which manual call points are exposed to moisture, suitably water-resistant devices should be used. Examples include external locations, wet areas of industrial buildings, food-processing areas that are subject to periodic washing down and certain kitchens.

c) To minimize the potential for malicious operation, manual call points should not normally be located within the malls of covered shopping complexes. Subject to the agreement of all relevant enforcing authorities, it might also be appropriate either to omit manual call points from areas accessible to the public or to site them so that they are accessible only to authorized persons, provided there is adequate surveillance of the entire premises by persons (or by CCTV) and that manual call points are provided at suitably staffed locations; examples of such premises include some public houses, cinemas, theatres and nightclubs.

d) In other premises in which there is a high likelihood of malicious false alarms, the use of manual call points with hinged covers should be considered [see **20.2**j)]; examples include schools, universities, certain public entertainment premises and public car parks.

NOTE In public car parks, consideration may be given to the use of a suitable emergency voice communication system in lieu of manual call points [see **20.2**k)].

35.2.3 *Recommendations for selection and siting of automatic fire detectors*

The following recommendations are applicable.

a) In areas in which automatic fire detectors are likely to result in a high level of unwanted alarms, it should be confirmed whether the provision of automatic fire detection is necessary to ensure that the objectives of the fire alarm system are satisfied (see Clause **4**).

b) Since, in most premises, heat detectors are likely to give rise to lower rates of unwanted alarms than other forms of automatic fire detector, before other types are used, it should be confirmed that the use of heat detectors would not satisfy both the objectives of the fire alarm system and the recommendations of this part of BS 5839 (see Clause **5** and Clause **21**).

c) The minimum static response temperature of heat detectors (see **3.37**) should not be less than 29 °C above the ambient temperature that the detector can be expected to experience for long periods of time, and not less than 4 °C above the maximum temperature that the detector can be expected to experience for short periods of time under normal conditions.

NOTE BS EN 54-5 specifies six classes of heat detector for use in high ambient temperatures (between 40 °C and 140 °C).

d) Rate of rise heat detectors should not be installed in locations in which rapid fluctuations in temperature may occur; examples include kitchens, boiler rooms, loading bays with large doors to open air and lantern-lights.

e) In the absence of overriding considerations (particularly in respect of effective detection of fire), the guidance contained in Table 5 should be taken into account when considering the use of point and optical beam smoke detectors, or when selecting the principle of operation of these detectors.
(See Notes to Table 5).

f) Optical beam smoke detectors should not be installed in areas in which obstruction of the beam may occur in normal circumstances.

g) Where optical beam detectors are installed in any area, they should be suitably mounted [see **22.5**g)]. Table 5 gives guidance on the limitations that apply when using and selecting point and optical beam detectors in certain areas.

Table 5 — Considerations when using and selecting point and optical beam smoke detectors

Area	Smoke detectors should never be installed	Smoke detectors should be avoided if possible	If smoke detectors are installed they should not be of the type indicated
Kitchens	X		
Areas close to kitchens			Ionization chamber
Rooms in which toasters are used		X	Ionization chamber
Rooms in which people smoke		X (unless ventilation rates are such as to avoid the risk of unwanted alarms)	Optical
Bathrooms and shower rooms	X		
Areas in which steam occurs under normal operations		X	Optical
Areas in which high concentrations of dust occur		X (regular cleaning or replacement of detectors may be necessary)	Optical
Areas in which large numbers of small insects (e.g. grain thrips) may enter			Optical (unless suitably designed to minimize unwanted alarms from insect ingress)
Areas in which the sensing element of the detector will be exposed to high air velocities			Ionization chamber
Areas in which there is high humidity		X	Ionization chamber
Areas in which vehicle or other engine exhaust fumes occur		X	Ionization chamber Optical beam
Areas in close proximity to openable windows		X	
Areas in which combustion gases may occur (e.g. certain boiler rooms)		X	

NOTE Table 5 does not apply in the following circumstances:

1) where it is considered necessary to install smoke detectors or smoke detectors of a type indicated as unsuitable, but filtering measures are incorporated (see **35.2.7**);

2) where, in a time related system (see**3.60**), the smoke detectors are disabled at times when the unsuitable environment exists;

3) where a multi-sensor smoke detector incorporates facilities to avoid unwanted alarms from the smoke sensor under the environmental conditions in question.

 © BSI 15 October 2002

h) Many aspirating fire detection systems can operate at a level of sensitivity much higher than normal point type smoke detectors. Special consideration should be given to the potential for false alarms if any high sensitivity fire detection system is proposed, to ensure than an unacceptable rate of unwanted alarms is not likely to result. In some applications in which aspirating fire detection systems are used, high sensitivity is not required in order to satisfy the objective of the system; in such cases, aspirating fire detection systems that can be arranged to provide sensitivity equivalent to that of point smoke detectors conforming to BS EN 54-7 should be used.

i) Carbon monoxide fire detectors should not be used in locations in which carbon monoxide may occur, under normal circumstances, in quantities sufficient to create the potential for unwanted alarms. Such areas include badly ventilated kitchens, some laboratories and areas in which vehicle or other exhaust fumes occur.

j) Carbon monoxide fire detectors should not be used in locations in which contamination of the electro-chemical cell could result in unwanted alarms. The guidance of the manufacturer on avoidance of unwanted alarms should be taken into account.

k) Flame detectors should not be located in areas in which sources of infra-red or ultraviolet radiation create the potential for unwanted alarms. Since various techniques can be adopted in the design of the detector to minimize the potential for unwanted alarms as a result of radiation from non-fire sources, the guidance of the manufacturer of the detector, in respect of sensitivity of detectors to such sources, should be taken into account.

35.2.4 *Recommendations for selection of system type*

The following recommendations are applicable.

a) Analogue smoke detection systems are likely to offer better immunity to false alarms than conventional two-state fire detection systems, particularly if signal processing incorporates techniques specifically intended to discriminate between certain unwanted alarms and real fires. Note that some two-state fire detection systems also employ such signal processing. Many analogue systems also provide a pre-alarm warning (see **3.43**), which enables investigation of conditions that, if no action is taken, would lead to an unwanted alarm. Unless there are overriding considerations, systems that incorporate a high number of smoke detectors should be of the analogue type.

NOTE 1 A high number of smoke detectors might be regarded as more than 100 detectors.

b) Certain fire detection systems which incorporate multi-sensor detectors have the potential to reduce greatly the potential for unwanted alarms. The extent to which the potential can be reduced depends on the characteristics of each proprietary multi-sensor detector and on the potential causes of unwanted alarms. The provision of more than one sensor within one fire detector does not, alone, necessarily have a significant impact on potential for unwanted alarms. Nevertheless, in systems that incorporate a very high number of automatic fire detectors (other than heat detectors), the use of systems that include multi-sensor fire detectors and incorporation of suitable measures to minimize the potential for unwanted alarms should be considered at the design stage.

NOTE 2 A very high number of detectors might be regarded as more than 1 000 detectors; in the future, as standards are developed for multi-sensor based fire detection systems and more proprietary systems become available, this recommendation might be amended to offer more definitive advice and to reduce the number of detectors above which such systems should be seriously considered, if evidence of significant improvements in unwanted alarm immunity can be established.

35.2.5 *Recommendations for protection against electromagnetic interference*

The following recommendations are applicable.

a) In order to minimize the potential for electromagnetic interference to cause unwanted alarms, the recommendations of Clause **28** should be followed.

b) The designer should take into account the likely sources of electromagnetic radiation in the building (e.g. mobile telephones, two-way radios, mobile telephone base stations and other high power transmitters).

c) In special cases where unusually high electromagnetic field strengths occur (e.g. radio transmitter sites, airport terminals and radar stations), guidance should be sought from the system manufacturer in respect of suitability of the proposed system and any special measures (such as incorporation of filters on external circuits) to reduce the potential for unwanted alarms. In the case of an existing building, information provided to the system manufacturer should include field strength measures.

35.2.6 ***Recommendations for performance monitoring of newly commissioned systems***

The following recommendations are applicable.

a) In the case of systems incorporating more than 50 automatic fire detectors, after commissioning, a soak period (see **3.56**) should follow. The duration of the soak period should be at least one week, but should be defined by the designer and incorporated within any tender specification.

b) Until successful completion of the "soak test", the system should not be regarded as the operational means of giving warning of fire in the building. During the soak period, each manual call point should bear an indication that it is not to be used.

c) The "soak test" should only be regarded as successfully completed if:

1) during the soak period, no false alarm occurred; or

2) investigation of all false alarms that occurred, by the supplier of the system, has identified the cause of every false alarm and enabled any relevant measures to be taken to minimize potential for similar false alarms to occur in the future.

NOTE A purchasing specification might require that, on completion of any relevant measures, a further soak test be carried out.

35.2.7 ***Filtering measures***

35.2.7.1 *Commentary*

*The recommendations of **35.2.2**, **35.2.3**, **35.2.4**, **35.2.5** and **35.2.6** inclusive apply to all systems. In some (usually large) systems, it might be considered at the design stage (see Clause **34**), or following unsatisfactory operational experience, that the rate, or the periodicity, of false alarms, is likely to be (or has proved to be) unacceptable. Under these circumstances, it might be necessary to take further "special" measures (see Annex E) to ensure that false alarms do not result in continual evacuation of people or summoning of the fire service. In installations with a very large number of automatic fire detectors (e.g. more than 1 000 detectors), particularly smoke detectors, filtering might be appropriate even if the rate of false alarms is acceptable, simply because the gross number of false alarms is likely to be high.*

There are two principal means by which potential false alarms can be filtered. The first, which is only applicable to those systems provided for property protection, is to disable automatic fire detectors (particularly smoke detectors) automatically at certain times of day (or night), when environmental conditions (such as those arising from an industrial process) are likely to give rise to unwanted alarms. In effect, the system may then become a Category M system during normal working hours, when people are present and can detect a fire, but a Category P system outside normal working hours (when the automatic fire detectors would be of most value in any case).

*A system that operates in this manner is described as a "time related system" (see **3.60**), and, in effect, it filters out unwanted alarms, rather than obviating their cause. Other forms of time related system may also be considered.*

For example, rather than totally disabling automatic fire detectors, their sensitivity might be reduced automatically at certain times, so that a (reduced) standard of protection can still be afforded. In a multi-sensor fire detection system, one of the sensors (e.g. a smoke sensor) might be disabled (or reduced in sensitivity) at certain times, so that some protection is still afforded by another sensor (e.g. a heat sensor).

*The second form of filtering involves the use of a staff alarm arrangement (see Clause **19**). This permits an investigation period following activation of an automatic fire detector, prior to operation of fire alarm sounders. Staff alarms that incorporate such an investigation period are now quite common in large, complex and well-managed buildings that are protected by a high number of smoke detectors. The staff alarm arrangement may apply at all times or only at certain times of the day, such as normal working hours; in this case, the system is also a time-related system.*

The fire service might, or might not, be summoned prior to the expiry of the investigation period. Where the fire service attendance time is not longer than the investigation period, it might be preferable to delay the summoning of the fire service until the expiry of the investigation period; confusion might occur, particularly with the occupants, if the fire service attends the premises when they are still fully occupied and no audible fire alarm signal is sounding. Any delay in summoning the fire service needs to be discussed and agreed with the fire service.

Equally, in a Category P system, consideration needs to be given to the overall period between operation of the fire alarm system and the ultimate attendance of the fire service, as a combination of an investigation period and a long fire service attendance time might preclude the objective of the system from being satisfied.

 © BSI 15 October 2002

Filtering may be applied solely to the summoning of the fire service but any delay needs to be agreed after consultation with the fire service. In this case, the building, or part of it, would be evacuated when the fire alarm system operates, but the automatic summoning of the fire service would be delayed pending an investigation to confirm whether the alarm signal is false or the result of a real fire.

*In some systems there may be significant potential for reduction of false alarms by the use of coincidence detection (see **21.1.7**).*

NOTE See also BS EN 54-2.

35.2.7.2 *Recommendations*

The following recommendations are applicable.

a) Filtering measures should only be adopted under the following circumstances:

1) after consultation and agreement with all relevant enforcing authorities; and

2) in the case of Category P systems in which it is proposed to incorporate an investigation period prior to the summoning of the fire service (whether manually or automatically), after consultation with the insurers; and

3) where it is considered that either the rate of false alarms (expressed as number of false alarms per 100 detectors per annum), or the actual number of false alarms, cannot be limited to a level acceptable to the user and the fire service by other means; and

4) where it is considered that the incorporation of filtering measures does not negate the objectives of the system in terms of protection of life, property, business continuity or the environment.

b) Filtering should not be applied to signals initiated by manual call points.

c) In time related systems, the change of state of the system at specific times should not rely on human action; it should occur automatically at pre-determined times. Procedures for dealing with public holidays, change to and from British Summer Time and the unexpected vacation of the building should be clearly understood by the user. Any state(s) in which the system is less effective than normal in the detection of fire should be indicated at the fire alarm indicating equipment.

d) Staff alarms should comply with the recommendations of **19.2.2**.

e) If the fire service is not summoned immediately at the start of any investigation period associated with a staff alarm, it is essential that they are summoned immediately on expiry of this period.

NOTE Reliability in compliance with this recommendation would be aided by a monitored facility for automatic transmission of an alarm signal to an alarm receiving centre on expiry of the investigation period.

f) Any arrangements for filtering of automatic summoning of the fire service by an alarm receiving centre should comply with BS 5979.

g) Where a signal from an automatic sprinkler system that is supplied from water mains is used as an input to the fire alarm system (e.g. by means of a pressure or flow switch), there should be liaison with the organization responsible for installing or maintaining the sprinkler system to minimize the potential for unwanted alarms as a result of water pressure surges. A hydraulic or electronic time delay facility should be considered.

35.2.7.3 *Recommendations for system management*

The following recommendations are applicable.

a) The user should ensure that staff in the building and visiting contractors are aware of the presence of any automatic fire detectors, and of the measures necessary to minimize the likelihood of false alarms.

b) Tender documents for contract work to be carried out in a protected area should contain a clause making the contractors responsible for informing their staff of the presence of any automatic fire detectors, and of the precautions to be adopted when working.

c) Where temporary work involving the generation of dust, smoke, paint spray, etc. is to be carried out in an area protected by smoke detectors, precautions should be taken to prevent unwanted alarms. One method of managing such work would be the operation of a permit to work system. Other suitable measures include the following:

1) temporary replacement of smoke detectors by other types of detector that will be less susceptible to the effects of the pollutants in question;

2) provision of a temporary screen between the work and the detectors;

NOTE The flammability of the screen should be considered to ensure that it does not increase the fire risk.

3) provision of brightly coloured temporary covers over detectors to prevent the ingress of contamination;

4) disablement of automatic fire detectors.

On completion of the work, the responsible person appointed by the user to manage the system (see Clause **47**) should ensure that proper reinstatement of the protection occurs.

d) Suitable notification of building occupants, and any alarm receiving centre to which fire alarm signals are transmitted, should occur prior to routine testing or maintenance work on the fire alarm system that might result in the occurrence of a fire alarm signal.

e) The user should ensure that building defects (e.g. leaking roofs), plant defects (e.g. steam leaks) and environmental problems (such as inadequate ventilation) that could cause unwanted alarms receive suitable attention.

f) All false alarms should be properly recorded by the user in the system log book [see **30.2**h), **31.2** and Clause **48**].

g) Suitable action should be taken by the user when false alarms occur (see **30.2**g) and **32.2**).

35.2.7.4 *Recommendations for service and maintenance*

Service and maintenance on the system should be carried out by a competent organisation in accordance with the recommendations of Section 6 of this standard.

 © BSI 15 October 2002

Section 4. Installation

36 Responsibility of installer

36.1 Commentary

This section of this part of BS 5839 provides recommendations for the work associated with installation of the fire alarm equipment in a building. This work might be undertaken by the same organization that designed the system or by a different organization. For example, the designer and installer might be a single, specialist fire alarm contractor. Alternatively, the purchaser might be responsible for the design of a fire alarm system (which might be undertaken by consultants acting on behalf of the purchaser), and the design might then be communicated, by means of a specification and/or drawings, to a specialist fire alarm contractor or to an electrical installation contractor, which would, in either case, then be responsible for installation.

Even if a specialist fire alarm contractor is responsible for installation, the actual installation work might then be sub-contracted to a third-party, such as an electrical installation contractor.

*Various contractual arrangements are possible, but it needs to be ensured that one organization is responsible for compliance with this section of the standard and that this responsibility is agreed prior to the start of the installation contract (see Clause **6**).*

*It is not, in general, the responsibility of the installer to check or verify whether the design of the system complies in full with the recommendations of this standard, unless the installer is also the designer (see **6.1**). In general, the responsibility of the installer is to install the system fully in accordance with the requirements of the designer and to follow good practice in the installation work. However, in practice, compliance with a number of recommendations of Section 2 impact on both design and installation, and may, therefore, be delegated by the designer to the installer, provided the responsibility for compliance is clear in any specification or contract, that the installer is competent to address the issues and that the responsibility is accepted by the installer. For example, the designer may delegate decisions regarding cable routes to the installer, by simple reference in the design to compliance with Clause **26**, with which it would then be the responsibility of the installer to comply.*

*At the design stage, the designer might have inadequate information to enable compliance with all recommendations of Section 2. For example, it is rarely possible, at the design stage, to warrant that the recommendations of **16.2** in respect of sound pressure levels will be satisfied by a particular number and distribution of fire alarm sounders (unless the number is greatly over-specified). Similarly, drawings on which the design is based might not show sufficient information about structural features of the building to enable the design to comply with Clause **22**. Accordingly, it will often by necessary for compliance with certain clauses of Section 2, or verification of compliance, to rest with an installer.*

Nevertheless, the designer needs to provide sufficient information and guidance to the installer to enable the installer to satisfy the relevant recommendations of Section 2 in the absence of expertise in the design of fire alarm systems. In this respect, the installer is then, in effect, simply complying with specified requirements of the designer.

Even though identification of design shortcomings is not generally the responsibility of an installer, good practice would dictate that, if the installer is aware of such shortcomings, particularly those arising from features of the building that might not have been known to the designer, they be drawn to the attention of the designer, user or purchaser.

36.2 Recommendations

The following recommendations are applicable to the responsibility of an installer.

a) The responsibilities associated with the installation of the system should be clearly defined, agreed and documented prior to the commencement of the installation work.

b) The installer should comply with the recommendations of **6.2**c).

c) The installer should comply with the recommendations of **7.2**b).

d) The installation of manual call points should be in accordance with the recommendations of **20.2**c) to **20.2**i).

e) When installing point, heat, smoke and carbon monoxide detectors, the installer should, at least, ensure compliance with the recommendations of **22.3**d), **22.3**g) and **22.3**m).

f) When installing beam-type smoke detectors, the installer should, at least, ensure compliance with the recommendations of **22.5**c), **22.5**e) to **22.5**g) and any manufacturer's recommendations for the mounting distance below the ceiling.

g) When installing line heat detectors, the installer should, at least, ensure compliance with the recommendations of **22.3**d), **22.3**f), **22.6**c) and **22.6**e).

h) When installing smoke detectors in ventilation ducts, the installer should, at least, ensure compliance with **22.10**a) and **22.10**c).

i) Where an installer identifies any circumstances that might lead to a high rate of false alarms, the designer, purchaser or user should be informed accordingly [see also **7.2**b)].

j) The installer of the mains power supplies to the fire alarm system should ensure that the supplies comply with the recommendations of **25.2**.

k) The installer should ensure that all control, indicating and power supply equipment that is likely to need routine attention for maintenance is sited in readily accessible locations that facilitate safe maintenance work.

l) All metallic parts of the installation including conduit, trunking, ducting, cabling and enclosures, should be well separated from any metalwork forming part of a lightning protection system.

NOTE 1 Further guidance is given in BS 6651:1999, in particular in Clause **19** and **A.2** of that standard.

m) The installer should comply with the requirements of **40.2**c) unless it has been agreed that this is to be the responsibility of others.

n) On completion of his works, the installer should issue a certificate in accordance with the model given in **G.2**, signed by a competent person.

NOTE 2 A designer might accept responsibility for variations from any of the above recommendations and communicate this in the form of specific written requirements (e.g. within a specification). In this case, the installer should record the relevant variations within the installation certificate issued by the installer (see Clause **41**).

37 Installation practices and workmanship

37.1 Commentary

The nature and quality of the installation work needs to be such as to maintain the integrity of the fire alarm system and minimize the duration and extent of disablement of the system during maintenance or modifications. Installation practices and workmanship need to conform to the requirements of BS 7671.

Penetration of construction (e.g. for the passage of cables, conduit, trunking or tray) need to be made good to avoid the free passage of fire or smoke, regardless of whether the construction has a recognized degree of fire resistance.

37.2 Recommendations

The following recommendations are applicable.

a) The entire system should conform to the requirements of BS 7671. In general, the recommendations of this standard supplement, but do not conflict with, these requirements. Where any such conflict is considered to exist, the recommendations of this standard should take precedence.

b) Cables which are directly fixed to surfaces should be neatly run and securely fixed at suitable intervals, in accordance with the recommendations of the cable manufacturer. Cables should not rely on suspended ceilings for their support.

c) The installer should ensure that all wiring complies with, at least, **26.2**f) to **26.2**o).

d) Joints in cables, other than those contained within the enclosures of equipment, should be avoided wherever practicable [see **26.2**g)].

e) So far as is reasonably practicable, cable routes should be selected to follow the recommendations in **26.2**.

f) Arrangements for earthing should be in accordance with the recommendations of the manufacturer. Care should be taken to ensure the electrical continuity of electromagnetic screens, including metallic sheaths of cables (see Clause **29**).

 © BSI 15 October 2002

g) Where new conduit, trunking or tray is installed, its capacity should be in accordance with the recommendations given in BS 7671.

h) Where a cable passes through an external wall, it should be contained in a smooth-bore sleeve of metal or other non-hygroscopic material sealed into the wall. This sleeve should slope downwards towards the outside and should be plugged with a suitable non-hardening waterproof compound to prevent the entry of rain, dust or vermin.

i) Where a cable passes through an internal wall, a small clearance hole should be provided. If additional mechanical protection is necessary, a smooth-bore sleeve should be sealed into the wall.

j) Care should be taken to ensure that the ends of any sleeves are free from sharp edges which might damage cables during installation.

k) When a cable passes through a floor, the considerations of **37.2**h), **37.2**i) and **37.2**j) apply, but the sleeve should extend as far above floor level as is required for protection of the cable it is to carry, but never less than 300 mm.

l) Where cables, conduits, trunking or tray pass through floors, walls, partitions or ceilings, the surrounding hole should be as small as reasonably practicable and made good with fire stopping materials that ensure that the fire resistance of the construction is not materially reduced. Spaces through which fire or smoke could spread should not be left around the cable, conduit, trunking or tray.

m) If cables or conduits are installed in channels, ducts, trunking or shafts that pass through floors, walls, partitions or ceilings, barriers with the appropriate level of fire resistance should be provided within the channels, etc. to prevent the spread of fire unless, in the case of ducts and shafts, the construction of the duct or shaft affords equivalent fire resistance to the structure penetrated; in the latter case fire stopping need only be provided where cables pass into, or out of, the duct or shaft.

38 Inspection and testing of wiring

38.1 Commentary

*On completion of wiring, or sections of wiring, the installer needs to carry out tests to ensure the integrity of cable insulation and adequacy of earthing. Usually, the tests on cables will be carried out with equipment disconnected and prior to completion of the entire system. Further tests need to, therefore, be carried out on completion of the system; these tests may form part of the commissioning process. In some (usually addressable) systems, maximum circuit impedance may be specified by the system manufacturer, in which case any measurements of impedance recommended by the manufacturer also need to be carried out, either on completion of installation or at commissioning (see Clause **39**).*

38.2 Recommendations

The following recommendations are applicable.

a) All installed cables with a manufacturer's voltage rating suitable for mains use should be subject to insulation testing at 500 V d.c. Prior to this test, cables should be disconnected from all equipment that could be damaged by the test.

b) Insulation resistance, measured in the above test, between conductors, between each conductor and earth, and between each conductor and any screen, should be, at least, 2 MΩ.

NOTE Control and indicating equipment can have fault sensing for wiring insulation resistance to earth. If this is, for example, set at 1 MΩ, the combined effect of all wiring earth insulation resistance ought to be well above this to avoid nuisance fault indications. For large systems, this 2 MΩ minimum needs to be much higher than this to achieve something in excess of 1 MΩ overall. For a small non-addressable system up to about four zones, 2 MΩ might be acceptable.

c) Earth continuity and, for mains supply circuits, earth fault loop impedance, should be tested to ensure compliance with BS 7671.

d) Unless there is specific agreement that the following tests will form part of the commissioning process, the tests should be carried out on completion of the installation work:

1) where maximum circuit resistance for any circuit is specified by the manufacturer, measurement of the resistance of every such circuit;

2) any other tests specified by the manufacturer of the system.

e) The results of all tests should be recorded and made available to the organization responsible for commissioning the system.

blank

Section 5. Commissioning and handover

39 Commissioning

39.1 Commentary

*The process of commissioning involves thorough testing of the installed system to ensure that it operates correctly in accordance with the recommendations of this standard and with the specification. At completion of commissioning, it also needs to be confirmed that all relevant documentation has been handed over to the user (see Clause **40**). The organization responsible for commissioning the system might, or might not, be the same organization that designed and/or installed the system, but the responsibility for commissioning needs to be clearly defined prior to the start of the installation work.*

*It is not, in general, the responsibility of the commissioning engineer to verify compliance of the design, or of the installation work, with this part of BS 5839 (i.e. with Section 2 and Section 4 of this standard). In general, the responsibility of the commissioning engineer is to verify that the system operates correctly in the manner designed and that the installation workmanship is generally of an adequate standard. However, in practice, it might be difficult to ensure that the system complies in full with all recommendations of Section 2 until the time of commissioning. For example, commissioning might represent the first (and only) opportunity to determine whether the number and distribution of fire alarm sounders is sufficient to enable compliance with the recommendations of **16.2** in respect of sound pressure levels. Similarly, commissioning presents an opportunity to ensure that structural features of the building, of which the designer might have been unaware, do not compromise the effectiveness of the system as it was originally designed.*

Accordingly, it will be necessary for anyone responsible for commissioning a fire alarm system to possess at least a basic knowledge of fire alarm design practices and of the recommendations of Section 2 and Section 4 of this standard. It will also be necessary for the commissioning engineer to be provided with the specification for the system. In view of the importance now attached to the avoidance of false alarms, it is also essential that the commissioning engineer is able to verify compliance with, at least, the principles discussed in Section 3 of this standard.

39.2 Recommendations

The following recommendations are applicable to new systems, and to modifications and additions to systems.

a) The system should be commissioned by a competent person (see **3.11**), who has access to the requirements of the designer (i.e. the system specification) and any other relevant documentation or drawings.

b) Any person responsible for commissioning a fire alarm system in accordance with the recommendations of this standard should possess, at least, a basic knowledge and understanding of Section 2, Section 3 and Section 4 of this standard.

c) At commissioning, the entire system should be inspected and tested to ensure that it operates satisfactorily and that, in particular:

1) all manual call points and automatic fire detectors function correctly in accordance with the recommendations in **45.4**;

2) if the specification requires labelling or other means of visual identification of manual call points automatic fire detectors, fire alarm devices or ancilliary devices, this has been carried out;

3) every manual call point and automatic fire detector, on operation, results in the correct zone indication, and, in the case of addressable systems, correct text display, at all indicating equipment;

4) where an optical beam detector uses a combined transmitter/receiver unit in conjunction with a reflector, care should be taken to minimize the effect of reflections (e.g. from surfaces close to the transmitter/receiver unit) from dominating the received signal. Unless the equipment has specific features to compensate for such effects, at commissioning, the installed unit should be tested by partial obscuration of the beam near to the reflector;

5) sound pressure levels throughout all areas of the building comply with the recommendations of **16.2**; and, where appropriate for voice alarms, an acceptable level of intelligibility is achieved in accordance with BS 5839-8 throughout all areas of the building;

6) any facility for remote transmission of fire alarm signals (and, where appropriate, fault signals) to an alarm receiving centre operates correctly.

NOTE 1 It is essential that any alarm receiving centre to which fire alarm signals are relayed is notified before, and immediately after completion of, any tests that could result in a fire alarm signal.

7) any "cause and effect" requirements of the designer (e.g. in respect of staged alarms or initiation of operation of other fire protection systems and equipment, safety measures, etc.) are fully satisfied;

8) all alarm, control, indicating, printing, and ancillary functions of the system operate correctly and are adequately labelled or identified;

9) no changes to the building since the time of original design have compromised the compliance of the system with this part of BS 5839 (e.g. by erection of new partitioning that affects the adequacy of siting of fire detectors or the effectiveness of warning devices);

NOTE 2 Particular care is advised where a system is commissioned in a "shell" property in advance of final occupation or fitting out.

10) siting of manual call points complies with, at least, the recommendations of **20.2**h) and **20.2**i);

11) siting of point heat, smoke and carbon monoxide detectors complies with **22.3**d) to **22.3**j), **22.3**m) and **22.3**n);

12) siting of beam-type smoke detectors complies with **22.3**d), **22.3**f), **22.3**i), **22.3**j), **22.5**e), **22.5**f) and **22.5**g);

13) siting of line heat detectors complies with **22.3**d), **22.3**f), **22.3**i), **22.3**j), **22.6**d) and **22.6**e);

14) siting of aspirating smoke detection systems complies with the guidance of the manufacturer;

15) siting of flame detectors complies with **22.8**b) and **22.8**c);

16) siting of any smoke detectors in ventilation ducts complies with **22.10**a);

17) siting of control, indicating and power supply equipment complies with **23.2.1**b), **23.2.1**c), **23.2.1**d), **23.2.1**e), **23.2.1**f) and **23.2.1**g);

18) a suitable zone plan is displayed in accordance with the recommendations of **23.2.2**e);

19) the provision of any visual alarms complies with the recommendations of Clause **17**;

20) mains power supplies are inspected as far as is reasonably practical to ensure compliance with the recommendations of **25.2**;

21) standby power supplies comply with the recommendations of **25.4** and that the system's actual load currents in all circumstances are close to the predictions used by the designer to determine the specified battery capacity;

22) as far as it is reasonably practicable to ascertain, the specified cable type has been used in all parts of the system and the workmanship complies with **37.2**;

23) as far as is reasonably practicable to ascertain the system complies with Section 3 of this standard;

24) there are no other obvious shortcomings in compliance with Section 2 of this standard (e.g. unprotected areas within a Category L1 or P1 system, or incorrect spacing or siting of fire detectors);

NOTE 3 The above recommendation is not intended to imply that it is the responsibility of the commissioning engineer to verify or certify compliance of the system design with this standard. However, if variations are identified by the commissioning engineer, particularly variations related to circumstances that might not have been known to the designer, they should be documented for referral to the designer, user or purchaser for agreement or action (see **7.2**).

25) in radio-linked systems, radio signal strengths are adequate throughout all areas of the protected premises to ensure reliable operation of the system.

26) adequate records of insulation resistance, earth continuity and, where appropriate, earth loop impedance tests exist;

27) all relevant documentation (see Clause **40**) has been provided to the user or purchaser.

d) Unless already undertaken and documented by the installer, the tests recommended in **38.2**d) should be carried out and the results recorded. Where specifically agreed that the tests recommended in **38.2**d) should be carried out at commissioning, these tests should be carried out and the results recorded.

 © BSI 15 October 2002

e) Labels, visible when batteries are in their normal position, should be fixed to batteries, indicating the date of installation.

f) On completion of the commissioning, a certificate signed by a competent person in accordance with the model given in **G.3**, should be issued.

40 Documentation

40.1 Commentary

*On completion of the system, it needs to be ensured that adequate records and other documentation are provided to the user or purchaser. (The user and purchaser might, or might not, be the same organization.) The responsibility for provision of the documentation may rest with more than one organization and needs to be defined before an order for the system is placed. At commissioning, it needs to be ensured that, either the documentation has been provided to the relevant parties, or that any absent documentation is identified for appropriate action (see Clause **39**).*

Particular importance needs to be attached to the preparation and accuracy of "as fitted" drawings and operation and maintenance manuals. The manuals need to be adequately specific to the system. Without these drawings and manuals, maintenance or future modification of the system might be difficult.

40.2 Recommendations

It is recommended that the following documentation should be provided to the purchaser or user of the system:

NOTE 1 The organization to which each form of documentation is provided needs to be defined in any contract for design, supply, installation and commissioning of the system.

a) Certificates for design, installation and commissioning of the system (see Clause **41**).

b) An adequate operation and maintenance manual for the system; this should provide information, specific to the system in question, regarding the following:

1) the equipment provided and its configuration, including, for radio-linked equipment, the background RF noise level and achieved signal strengths;

2) use of all controls;

3) recommendations for investigation of a fire alarm or fault signal after the incident is over and the building declared safe for re-occupation.

NOTE 2 This is not intended to be the emergency or evacuation plan, which is the responsibility of the occupant;

4) recommendations for investigation in the event of a false alarm (see Section 3);

5) routine weekly and monthly testing of the system by the user or his appointed agent (see Clause **44**);

6) service and maintenance of the system in accordance with Section 6 of this standard;

7) avoidance of false alarms (see Section 3);

8) the need to keep a clear space around all fire detectors and manual call points;

9) the need to avoid contamination of detectors during contractors' activities;

10) the importance of ensuring that changes to the building, such as relocation of partitions, do not affect the standard of protection;

11) other user responsibilities described in this part of BS 5839 (see Section 7).

c) "As fitted" drawings indicating at least the following:

1) the positions of all control, indicating and power supply equipment;

2) the positions of all manual call points, fire detectors and fire alarm devices;

3) the positions of all equipment that may require routine attention or replacement (e.g. short circuit isolators);

4) the type, sizes and actual routes of cables.

NOTE 3 The cable routes shown need to comprise a reasonable representation of the route followed, such as to enable a competent person to locate the cable in the event of a fault or need for modification or extension of the system; a simple schematic showing the sequence in which devices are wired is unlikely to satisfy this recommendation, other than in small, simple systems.

NOTE 4 In the case of extensions or alterations, existing "as fitted" drawings need to be updated.

d) A log book in which all events, including fire alarm signals, faults signals, system tests and maintenance visits, can be recorded (see Clause **48**). A model format for a log book is given in Annex F;

e) A record of any agreed variations from the original design specification.

f) Such other records as are required by any purchase specification (e.g. insulation resistance test records or commissioning records).

41 Certification

41.1 Commentary

On completion of design, installation and commissioning, a separate certificate needs to be issued for each of these three processes, confirming compliance with the recommendations of this standard for the stage in question (i.e. design, installation or commissioning) or identifying variations. All three processes might be undertaken by one organization, or might be carried out by independent organizations; whichever arrangement applies, three separate certificates ultimately need to be issued. It needs to be possible for an organization to issue a certificate for the process for which they are responsible, regardless of whether a certificate has been issued for either of the other processes.

It is essential that the person who signs these certificates is competent to verify whether the recommendations of this standard in respect of the process to which the certificate refers have, or have not, been satisfied. The purchaser or user might, subsequently, rely on the certificate as, for example, evidence of compliance with legislation. Liability could arise on the part of any organization that issues a certificate without due care in ensuring its validity.

*On completion of the system, it will be handed over to the purchaser or user; at this stage, the organization bearing contractual responsibility to the purchaser for the system needs to issue a certificate of acceptance to the purchaser for completion by the purchaser. The purpose of this certificate is to constitute objective evidence that the purchaser is satisfied, to the extent that the purchaser is competent to ensure, that the system satisfies the requirements of the purchaser and the user. The certificate also needs to confirm that adequate documentation has been handed over to the user, that the user has been instructed in the use of the system and understands his or her obligations to ensure the system is maintained in a functional state and is regularly inspected and tested. The purchaser might wish to carry out an independent inspection of the system, or to witness certain tests (which may include any or all commissioning tests) as a pre-requisite for completion of the acceptance certificate (see Clause **42**).*

For certain (usually large and/or complex systems), the purchaser or user might wish to arrange for an independent inspection, and possibly test, of the system to verify compliance with the recommendations of this standard in respect of design, installation and commissioning. If so, the organization that commissions the independent verification needs to require that a verification certificate be issued.

41.2 Recommendations

The following recommendations are applicable.

a) On, or as soon as practicable after, completion of each of the following processes, a certificate should be issued by the organization responsible for the process, certifying compliance with the recommendations of this standard in respect of the process or, if variations exist, clearly identifying these variations:

— design;

— installation;

— commissioning.

b) Following completion of the installation, the organization bearing contractual responsibility to the purchaser for the system should issue a certificate of acceptance to the purchaser (see Clause **42**) for completion by the purchaser.

 © BSI 15 October 2002

c) If a purchaser or user commissions an independent audit of the system to verify, as far as practicable, that design, installation and commissioning complies with the recommendations of this standard (see Clause **43**), the purchaser should request that the organization responsible for the audit issues a verification certificate.

d) Model certificates of design, installation, commissioning, acceptance and verification are contained in Annex G.

NOTE The certificate issued for any of these five processes may vary in format from that shown in Annex G but, as a minimum, the information and statements of compliance within the model certificates should be provided.

42 Acceptance

42.1 Commentary

On completion of the system, arrangements need to be made for formal handover of the system to the purchaser or user, and formal acceptance of the system by the purchaser (or representative of the purchaser).

Before accepting the handover of the system, the purchaser or a representative needs to ensure that they are satisfied with the installed system, that the user has an adequate understanding of the operation of the system and the measures necessary to prevent false alarms, and that relevant documentation has been provided. In the case of small, simple systems, or systems installed in the premises of small organizations with little relevant in-house expertise, acceptance might involve little more than a brief inspection of the system by the user, demonstration of its operation by the commissioning engineer, and handover of the relevant documents to the user. In large, complex systems, it is likely that the purchaser will wish to witness relevant tests, as part of a formal and structured acceptance procedure.

*As evidence of acceptance, an acceptance certificate needs to be signed by the purchaser (see Clause **41**).*

42.2 Recommendations

The following recommendations are applicable.

a) A purchase specification should define the acceptance procedures required by the purchaser, including any tests that are to be witnessed [see **6.2**d)] and details of the witnessing procedure, e.g. notice to be given.

b) Before accepting a system, the purchaser (or appropriate representative of the purchaser) should ensure, at least, the following:

1) that all installation work appears to be satisfactory;

2) that the system is capable of giving a fire alarm signal;

3) that any facility for remote transmission of faults and alarms to an alarm receiving centre operates correctly;

NOTE 1 An appropriate representative of the purchaser might be the user.

NOTE 2 It is essential that any alarm receiving centre to which fire alarm signals are relayed be notified before, and immediately after completion of, any tests that could result in a fire alarm signal.

4) that the following documents have been provided to the purchaser or user:

— "as fitted" drawings;

— operating and maintenance instructions;

— certificates of design, installation and commissioning (see Clause **41**);

— a log book in which all events, including fire alarm signals, fault signals, system tests and maintenance visits can be recorded;

5) that sufficient representatives of the user have been properly instructed in the operation of the system, including, at least, all means of triggering fire signals, silencing and resetting the system and avoidance of false alarms;

NOTE 3 In the case of large, complex systems, this is likely to necessitate a formal training course for a number of people; the requirements for such training should be defined in the purchase specification.

6) that the nominated responsible person (see **3.49**) has been advised of their responsibilities and how these might be discharged (see Clause **47**);

7) that all relevant tests, defined in the purchase specification, have been witnessed;

NOTE 4 Some, or all, of these tests may be witnessed when commissioning is carried out, although this would be less appropriate in large, complex systems.

c) As evidence of acceptance, the purchaser (or appropriate representative of the purchaser) should sign an acceptance certificate (see Clause **41**).

43 Verification

43.1 Commentary

Small fire alarm systems are often designed, supplied, installed and commissioned by a single organization, or a substantial part of these tasks is undertaken by one organization. For example, the organization might be the system manufacturer or an electrical contractor.

While this might also be so in even the largest, most complex systems, often, at least one of the above processes (e.g. design) is undertaken by a different organization from the others. Sometimes several organizations might be involved. For example, design might be undertaken by consultants, supply and commission by the manufacturer, and installation by an electrical contractor. The relevant certificates will then each be completed by different organizations, no one of which has overall responsibility for the provision of a fire alarm system that is suitable for its purpose and in accordance with the structural features of the building.

*While the contractual arrangements whereby a system is designed, supplied, installed and commissioned are outside the scope of this standard, it needs to be noted that division of responsibility for these processes introduces scope for system shortcomings for which, in practice, none of the parties involved is directly responsible. For example, in a new building, the designer of the fire alarm system might not be given all the relevant information regarding structural features of the building [e.g. deep beams, obstructions to the flow of smoke and similar features to which **22.3**h), **22.3**i), **22.3**j), **22.3**k) and **22.3**l) apply]. Alternatively, the design of the building, or its internal layout, might change after design of the fire alarm system, but before its installation.*

*It is accepted in this standard that it is not the responsibility of the installer or the commissioning engineer to identify shortcomings in design, although, if these are identified, they need to be drawn to the attention of the relevant person [see **7.2**b)]. A purchaser may consider that, as a result of division of responsibilities for design, supply, installation and commissioning, or for any other reason, there is significant potential for the installed system to deviate from the recommendations of this standard. In these circumstances, verification needs to be obtained from a single organization. This organization needs to issue a single verification certificate. This verification needs to confirm that, as far as can reasonably be determined, the system complies with all recommendations of this standard (including the recommendations of Section 3), or that variations have been agreed and documented (see Clause **41** and **G.5**).*

The verifying organization may be one of those involved in the design, supply, installation or commissioning processes (e.g. the system supplier or the designer) or an independent third party.

It needs to be appreciated that, nevertheless, after completion of installation, it is unlikely that any one organization, particularly a third party, will be able to verify in full the compliance of the system with every recommendation of this standard. For example, much of the wiring might be impossible to inspect. The scope and extent of the verification process needs, therefore, to be subject to agreement between the purchaser or user and the organization responsible for verification. An indication of the scope and extent needs to be given in the verification certificate or documents associated therewith (e.g. a report).

 © BSI 15 October 2002

43.2 Recommendations

The following recommendations are applicable.

a) Where a purchaser or user considers that, as a result of division of responsibility for the design, supply, installation and commissioning processes, there is significant potential for the installed system to deviate from the recommendations of this part of BS 5839, verification of compliance with this standard should be arranged.

b) Any person responsible for verification should be competent in the design of fire alarm systems in accordance with this part of BS 5839 and familiar with the relevant installation practices.

c) The scope and extent of the verification process should be agreed between the purchaser or user and the organization responsible for verification, but should address the recommendations of Section 3.

d) On completion of verification, a verification certificate should be issued, verifying that the system complies with the recommendations of this standard, or identifying variations from these recommendations (see Clause **41**). The certificate should also contain information on the scope and extent of the verification carried out or identify where this information is available.

NOTE A verification certificate can be of value to an enforcing authority or property insurer.

blank

Section 6. Maintenance

44 Routine testing

44.1 Commentary

Although modern fire alarm systems may incorporate a high degree of monitoring, so that faults are indicated automatically, it is still necessary for the responsible person nominated by the user to ensure that fault indications at the panel are identified for appropriate action. It is also vital for a regular test to be carried out to ensure that there has not been any major failure of the entire system, or a significant part of the system.

Routine testing of the system also provides an opportunity for occupants of the building to become, and remain, familiar with the fire alarm signal(s) that the system produces. In systems with staged alarms that incorporate an "Alert" and an "Evacuate" signal, both signals needs to be operated on the occasion of each test to ensure that occupants are aware of the existence of both signals and their different meaning.

44.2 Recommendations for weekly testing by the user

When testing the fire detection system, there may be a need to isolate ancillary outputs.

The following recommendations apply:

a) Every week, a manual call point should be operated during normal working hours. It should be confirmed that the control equipment is capable of processing a fire alarm signal and providing an output to fire alarm sounders, and to ensure that the fire alarm signal is correctly received at any alarm receiving centre to which fire alarm signals are transmitted. It is not necessary to confirm that all fire alarm sounder circuits operate correctly at the time of this test.

NOTE 1 It is essential that any alarm receiving centre is contacted immediately before, and immediately after, the weekly test to ensure that unwanted alarms are avoided and that fire alarm signals are correctly received at the alarm receiving centre.

NOTE 2 The user needs to take into account of the manufacturer's recommendations, particularly when battery powered devices are being tested, e.g. within radio-linked fire alarm systems.

b) The weekly test should be carried out at approximately the same time each week; instructions to occupants should then be that they should report any instance of poor audibility of the fire alarm signal. In systems with staged alarms incorporating an "Alert" and an "Evacuate" signal, the two signals should be operated, where practicable, sequentially in the order they would occur at the time of a fire (i.e. "Alert" and then "Evacuate").

c) In premises in which some employees only work during hours other than that at which the fire alarm system is normally tested, an additional test(s) should be carried out at least once a month to ensure familiarity of these employees with the fire alarm signal(s).

d) A different manual call point should be used at the time of every weekly test, so that all manual call points in the building are tested in rotation over a prolonged period. There is no maximum limit for this period (e.g. in a system with 150 manual call points, the user will test each manual call point every 150 weeks). The result of the weekly test and the identity of the manual call point used should be recorded in the system log book [see **40.2**d)].

e) The duration for which any fire alarm signal is given (other than solely at control and indicating equipment) at the time of the weekly test by the user should not normally exceed one minute, so that, in the event of a fire at the time of the weekly test, occupants will be warned by the prolonged operation of the fire alarm devices.

f) Voice alarm systems should be tested weekly in accordance with the recommendations of BS 5839-8.

44.3 Recommendations for monthly attention by the user

The following recommendations apply.

a) If an automatically started emergency generator is used as part of the standby power supply [see **25.4**e)2)], it should be started up once each month by simulation of failure of the normal power supply and operated on-load for at least one hour. The test should be carried out in accordance with the instructions of the generator manufacturer, including instructions on the load that should be operated. At the end of the test, the fuel tanks should be left filled, and the oil and coolant levels should be checked and topped up as necessary.

b) If vented batteries are used as a standby power supply, a visual inspection of the batteries and their connections should be made to ensure that they are in good condition. Action should be taken to rectify any defect, including low electrolyte level.

NOTE Care should be taken to ensure that any person undertaking these tasks is competent to do so safely and has the relevant technical knowledge and training.

45 Inspection and servicing

45.1 Commentary

It is essential that the system is subject to periodic inspection and servicing so that unrevealed faults are identified, preventive measures can be taken to ensure the continued reliability of the system, false alarm problems are identified and suitably addressed, and that the user is made aware of any changes to the building that affect the protection afforded by the system.

Periodic inspection and servicing needs to be carried out by a competent person with specialist knowledge of fire detection and alarm systems, including knowledge of the causes of false alarms, sufficient information regarding the system, and adequate access to spares.

This will normally be an outside fire alarm servicing organization; care needs to be taken to ensure that, if, for example, in-house employees are used for this task, they have equivalent competence to the technicians of a typical fire alarm servicing organization. Competence of a fire alarm servicing organization can be assured by the use of organizations that are third-party certificated, by a UKAS-certificated certification body, to carry out inspection and servicing of fire alarm systems.

45.2 Recommendation for quarterly inspection of vented batteries

All vented batteries and their connections should be examined by a person competent in battery installation and maintenance technology. Electrolyte levels should be checked and topped up as necessary.

NOTE In many large premises and sites, in-house maintenance personnel may be competent to carry out this task.

45.3 Recommendations for periodic inspection and test of the system

Some fire detection and fire alarm systems and components include features that permit functions to be automatically monitored, and faults or warnings to be annunciated, or otherwise made available to authorized persons. In such cases, the recommendations for routine testing under this subclause and in **45.4** may be modified to omit testing which is declared to be unnecessary by the equipment supplier, provided it can be demonstrated that the automatic monitoring achieves the same objective as the appropriate test recommended in this subclause and/or **45.4**.

The recommendations in this clause should be carried out by a competent person (see **3.11**). The period between successive inspection and servicing visits should be based upon a risk assessment, taking into account the type of system installed, the environment in which it operates and other factors that may affect the long term operation of the system. The recommended period between successive inspection and servicing visits should not exceed six months. If a risk assessment shows a need for more frequent inspection and servicing visits, then all interested parties should agree the appropriate inspection and servicing schedule. If this recommendation is not implemented, it should be considered that the system is no longer compliant with this part of BS 5839.

 © BSI 15 October 2002

The following recommendations are applicable.

a) The system log book should be examined. It should be ensured that any faults recorded have received appropriate attention.

b) A visual inspection should be made to check whether structural or occupancy changes have affected the compliance of the system with the recommendations of this standard for the siting of manual call points, automatic fire detectors and fire alarm devices. Particular care should be taken to verify whether:

1) all manual call points remain unobstructed and conspicuous;

2) any new exits have been created without the provision of an adjacent manual call point;

3) any new or relocated partitions have been erected within 500 mm horizontally of any automatic fire detector [see **22.3**g)];

4) any storage encroaches within 300 mm of ceilings, such as to obviate compliance with **22.3**i);

5) a clear space of 500 mm is maintained below each automatic fire detector [see **22.3**n)], and that the ability of the detector to receive the stimulus that it has been designed to detect has not been impeded by other means;

6) any changes to the use or occupancy of an area makes the existing types of automatic fire detector unsuitable for detection of fire or prone to unwanted alarms;

7) any building alterations or extensions require additional fire detection and alarm equipment to be installed.

c) The records of false alarms should be checked in accordance with **30.2**i). The rate of false alarms during the previous 12 months should be recorded [see **30.2**i)]. Action taken in respect of false alarms recorded should comply with the recommendations of **30.2**j).

d) The standby battery should be disconnected and full load alarm should be simulated.

e) Batteries and their connections should be examined and momentarily load tested with the mains disconnected (other than those within devices such as manual call points, detectors and fire alarm sounders of a radio-linked system), to ensure that they are in good serviceable condition and not likely to fail before the next service visit. Vented batteries should be examined to ensure that the specific gravity of each cell is correct.

f) The fire alarm functions of the control and indicating equipment should be checked by the operation of at least one detector or manual call point on each circuit. An entry should be made in the log book indicating which initiating devices have been used for these tests.

g) The operation of the fire alarm devices should be checked.

h) All controls and visual indicators at control and indicating equipment should be checked for correct operation.

i) The operation of any facility for automatic transmission of alarm signals to an alarm receiving centre should be checked. Where more than one form of alarm signal can be transmitted (e.g. fire and fault signals), the correct transmission of each signal should be confirmed.

j) All ancillary functions of the control and indicating equipment should be tested.

k) All fault indicators and their circuits should be checked, where practicable, by simulation of fault conditions.

l) All printers should be tested to ensure that they operate correctly and that characters are legible. It should be ensured that all printer consumables are sufficient in quantity or condition to ensure that the printer can be expected to operate until the time of the next service visit.

m) Radio systems of all types should be serviced in accordance with the recommendations of the manufacturer.

n) All further checks and tests recommended by the manufacturer of the control and indicating equipment and other components of the system should be carried out.

o) On completion of the work, any outstanding defects should be reported to the responsible person, the system log book [see **40.2**d)] should be completed and a servicing certificate should be issued (see Annex G).

45.4 Recommendations for inspection and test of the system over a 12 month period

In addition to the work recommended in **45.3**, it is recommended that the following work be carried out every year.

NOTE 1 The work described may be carried out over the course of two or more service visits during each twelve month period.

a) The switch mechanism of every manual call point should be tested, either by removal of a frangible element, insertion of a test key or operation of the device as it would be operated in the event of fire.

b) All automatic fire detectors should be examined, as far as practicable, to ensure that they have not been damaged, painted, or otherwise adversely affected. Thereafter, every detector should be functionally tested. The tests used need prove only that the detectors are connected to the system, are operational and are capable of responding to the phenomena they are designed to detect.

c) Every heat detector should be functionally tested by means of a suitable heat source, unless operation of the detector in this manner would then necessitate replacement of part or all of the sensing element (e.g. as in fusible link point detectors or non-integrating line detectors). Special test arrangements will be required for fusible link heat detectors. The heat source should not have the potential to ignite a fire; live flame should not be used, and special equipment might be necessary in explosive atmospheres.

d) Point smoke detectors should be functionally tested by a method that confirms that smoke can enter the detector chamber and produce a fire alarm signal (e.g. by use of apparatus that generates simulated smoke or suitable aerosols around the detector). It should be ensured that the material used does not cause damage to, or affect the subsequent performance of, the detector; the manufacturer's guidance on suitable materials should be followed.

e) Optical beam smoke detectors should be functionally tested by introducing signal attenuation between the transmitter and receiver, either by use of an optical filter, smoke or simulated smoke.

f) Aspirating fire detection systems should be functionally tested as described in **45.4**d), with each sampling point, or group of sampling points, in the pipework of the system treated as a point detector. Note that not all test products may be appropriate for the purpose.

g) Carbon monoxide fire detectors should be functionally tested by a method that confirms that carbon monoxide can enter the detector chamber and produce a fire alarm signal (e.g. by use of apparatus that generates carbon monoxide or a gas that has a similar effect on the electro-chemical cell as carbon monoxide).

WARNING Carbon monoxide is a highly toxic gas, and suitable precautions should be taken in its use.

NOTE 2 It should be ensured that any test gas used does not cause damage to, or affect the subsequent performance of, the detector; the manufacturer's guidance on suitable test gases should be followed.

h) Flame detectors should be functionally tested by a method that confirms that the detector will respond to a suitable frequency of radiation and produce a fire alarm signal. The guidance of the manufacturer on testing of detectors should be followed.

i) In fire detection systems that enable analogue values to be determined at the control and indicating equipment, it should be confirmed that each analogue value is within the range specified by the manufacturer.

j) Multi-sensor detectors should be operated by a method that confirms that products of combustion in the vicinity of the detector can reach the sensors and that a fire signal can be produced as appropriate. The guidance of the manufacturer on the manner in which the detector can be functionally tested effectively should be followed.

k) All fire alarm devices should be checked for correct operation. It should be confirmed that visual fire alarm devices are not obstructed from view and that their lenses are clean.

l) All unmonitored, permanently illuminated filament lamp indicators at control and indicating equipment should be replaced.

m) Radio signal strengths in radio-linked systems should be checked for adequacy.

n) A visual inspection should be made to confirm that all readily accessible cable fixings are secure and undamaged.

o) The cause and effect programme should be confirmed as being correct.

 © BSI 15 October 2002

p) The standby power supply capacity should be checked to establish it remains suitable for continued service.

q) All further annual checks and tests recommended by the manufacturer of the control and indicating equipment and other components of the system should be carried out.

On completion of the work, any outstanding defects should be reported to the responsible person and a record of the inspection and test should be made on the servicing certificate.

NOTE 3 Since stimulus of the sensing element through introduction of the phenomena or surrogate phenomena which the above detectors are designed to detect forms part of the test, use of a test button or a test magnet (for example) or compliance with **45.4**i) does not satisfy the recommendations given.

46 Non-routine attention

46.1 Commentary

*The arrangements in Clause **45** are intended to maintain the system in operation under normal circumstances. However, from time to time, the fire alarm system is likely to require non-routine attention, including special maintenance. Non-routine maintenance includes:*

— *a special inspection of an existing fire alarm system when a new servicing organization takes over servicing the system;*

— *repair of faults or damage;*

— *modification to take account of extensions, alterations, changes in occupancy or false alarms;*

— *action to address an unacceptable rate of false alarms;*

— *inspection and test of the system following a fire.*

46.2 Recommendations for special inspection on appointment of a new servicing organization

The following recommendations apply:

a) When a servicing organization takes over servicing arrangements for an existing system, a special inspection should be carried out, and existing records (see Clause **40**), where available, should be studied, to obtain sufficient information to be documented for effective future servicing of the system.

b) Major areas of non-compliance with this standard should be documented and identified to the responsible person appointed by the user. The classification of a non-compliance as major is subjective, but the following non-compliances should be regarded as major:

NOTE 1 It is not implied that non-compliances need to be rectified; this is a matter for the user to determine, based on the advice of the servicing organization, the enforcing authorities, the insurer and any third-party advisers engaged by the user, as appropriate.

1) an inadequate number of call points to comply with the recommendations of **20.2**;

2) inadequate provision of fire detection to comply with the recommendations of this standard for the Category of system that the system was designed to meet;

3) sound pressure levels that fail to comply with the recommendations of **16.2**;

4) standby power supplies that fail to comply with the recommendations of **25.4**. The absence of any standby power supply should be highlighted to the responsible person, as systems that incorporate no standby supply breach the Health and Safety (Safety Signs and Signals) Regulations 1996 [1];

5) cabling with fire resistance that fails to comply with the recommendations of **26.2**c);

6) monitoring of circuits that fail to comply with the recommendations of **12.2.1**;

7) standards of electrical safety such that the recommendations of Clause **29** are not satisfied;

8) exposure to, or experience of, false alarms, such as to preclude compliance with section three;

9) changes in the use, layout and construction of the protected premises that may impact on the effectiveness of the system.

c) If no log book suitable for enabling compliance with the recommendations of **48.2** exists, a suitable log book should be provided by the servicing organization.

46.3 Recommendations for arrangements for repair of faults or damage

The following recommendations apply.

a) Where maintenance is carried out by a third-party, such as a fire alarm maintenance organization, there should be an agreement for emergency call out to deal with any fault or damage that occurs to the system. The agreement should be such that, on a 24 h basis, a technician of the maintenance organization can normally attend the premises within eight hours of a call from the user.

NOTE It is accepted that this might not be possible in very remote areas and certain offshore islands, in which case this should be regarded as a variation from the recommendations of this part of BS 5839 in respect of maintenance arrangements. This variation should be recorded in the system log book.

b) The name and telephone number of any third-party responsible for maintenance of the system should be prominently displayed at the main control and indicating equipment, and the records and documentation as identified in Clause **40** should be kept updated.

c) The user should record all faults or damage in the system log book, and should arrange for repair to be carried out as soon as possible.

46.4 Modifications to the system

46.4.1 *Commentary*

Modifications to the system can arise for a number of reasons. Examples include:

— extension of the system to protect areas of the building previously unprotected or newly constructed;

— change of detector type as a result of changes in occupancy or the occurrence of false alarms;

— re-siting of, or increase in the number of, detectors and/or fire alarm devices to take account of changes in the layout of the building;

— reconfiguration of the system (in hardware, software or both) to change the cause and effect logic in order to facilitate filtering of false alarms.

Since modification of a system effectively involves an element of re-design, responsibility for modification of a system needs to rest with a person who has a sufficient degree of design competence.

Even simple modifications can give rise to the need for significant re-testing of the system. This is particularly true of software-controlled systems. For example, a software change to facilitate a different cause and effect for a single automatic fire detector can result in the introduction of software errors that affect the operation of entirely non-related parts of the system.

It is possible, in some systems, for modification of the system configuration to be carried out remotely, via a modem. Great care needs to be taken, regardless of whether modifications are undertaken on site or remotely, to ensure that:

— the system continues to comply in full with this part of BS 5839, or that existing non-compliances are not made more non-compliant; if new variations are introduced, it needs to be ensured that a new certificate, reflecting the variations, is issued;

— suitable tests are carried out at the protected premises to confirm that, after modification, the system operates as intended and that errors have not resulted in changes to other parts of the system;

— "as fitted" drawings and other records are updated as appropriate;

*— details of the modification are documented and provided to the responsible person [see **47.2**)].*

Although the modifications may often be carried out remotely by the maintenance organization, it will be appropriate for a competent person from the maintenance organization to visit the premises before the modification is carried out, to confirm the validity of the modification and consider its effect on compliance with this part of BS 5839. It might also be necessary to visit the premises to undertake certain tests immediately after the modification has been carried out.

 © BSI 15 October 2002

46.4.2 ***Recommendations applicable to all modification work***

The following recommendations apply to all modification work, regardless of whether it is carried out on site or remotely.

a) Responsibility for modification of a fire alarm system should rest, ultimately, with a person who is competent in at least the basic principles of fire alarm system design and is conversant with this part of BS 5839.

NOTE 1 This person may, for example, be the original designer, or may be a competent representative of the user or maintenance organization.

b) Before modifying a fire alarm system, care should be taken to ensure that the proposed modifications do not detrimentally affect the compliance of the system with fire safety legislation; where doubt exists, there should be consultation with the relevant enforcement authority.

c) The responsible person (see Clause **47**) should be aware of, and agree, in writing, any modifications proposed for the system. Where appropriate, modifications should also be subject to the agreement of the enforcing authorities and/or insurers.

d) All components, circuits, system operations and site-specific software functions known to be affected by the modifications should be tested for correct operation following the modifications.

e) In addition to the tests recommended in **46.4.2**d), the following tests should be carried out to ensure that there is no adverse effect on the overall system:

1) if one or more devices have been added to or removed from a circuit, at least one other device on the same circuit should be tested;

2) if the control equipment has been modified, at least one device on every circuit should be tested;

3) if any additional load has been placed on the system, tests should be carried out to prove that the rating of the power supply unit and the capacity of the standby batteries remain adequate;

4) if software has been modified, further random testing of other parts of the system should be carried out to ensure that seemingly unrelated parts of the system have not been adversely affected.

NOTE 2 The nature and extent of these tests cannot be specified in this standard; this will depend on the nature and extent of the software changes and should be defined by the organization responsible for the software changes.

f) On completion of the modifications, all “as fitted” drawings and other relevant system records should be updated as appropriate and made available with the system documentation (see Clause **40**).

g) On commissioning of the work and completion of the tests, a modification certificate should be issued, confirming that the work has been carried out in accordance with the recommendations of this part of BS 5839, or identifying any variations. A model modification certificate is set out in Annex G. Where responsibility for the compliance, or otherwise, of the modified system with the recommendations of section two of this standard rests with any person other than the organization carrying out the modification, that person should sign the appropriate section of the modification certificate and ensure it is made available with the system documentation (see Clause **40**).

46.4.3 ***Recommendations applicable to modifications carried out remotely***

In addition to the recommendations of **46.4.2**, the following recommendations apply.

a) Any person carrying out modifications remotely should have access to current “as fitted” drawings of the system and to the current system configuration, indicating full details of cause and effect logic, available with the system documentation (see Clause **40**).

b) Any person carrying out modifications remotely should be conversant with this part of BS 5839.

46.4.4 ***Recommendations for action to address an unacceptable rate of false alarms***

The following recommendations apply.

a) Any investigation into an unacceptable rate of false alarms, and any subsequent modifications to the system, should take into account the guidance contained in Section 3 of this standard. Where causes of false alarms cannot be determined, each of the recognized causes discussed in Clause **33** should be formally considered.

b) Following such modifications, the system should either continue to comply with this part of BS 5839, or should not be more non-compliant than prior to the modifications unless agreed with all interested parties.

c) Any relevant documentation should be made available with the system documentation (see Clause **40**).

46.4.5 ***Recommendations for inspection and test of the system following any fire***

The following recommendations should be carried out as soon as possible after any fire.

a) Every manual call point, automatic fire detector and fire alarm device that might have been affected by the fire should be inspected and tested in accordance with **45.4**.

b) A visual examination and suitable tests should be carried out on any other part of the system that lies within the fire area and other areas affected by corrosive smoke from the fire and that might have been damaged by the fire (e.g. power supplies, control equipment and cable). Where there is evidence of damage, suitable action should be taken.

c) Circuits external to the control and indicating equipment that could have been affected by the fire should be tested for correct operation.

d) On completion of the work, any defects found should be recorded in the system log book, and the responsible person appointed by the user should be notified accordingly.

46.4.6 ***Recommendation for inspection and test of the system following long periods of disconnection***

The recommendations for inspection and test of the system over a 12 month period (see **45.4**) should be undertaken.

 © BSI 15 October 2002

Section 7. Users responsibilities

47 Responsible person

47.1 Commentary

The user needs to appoint a single, named responsible person to supervise all matters pertaining to the fire alarm system. The role of the responsible person is to ensure that the system is tested and maintained in accordance with the recommendations of this part of BS 5839, that appropriate records are kept and that relevant occupants in the protected premises are aware of their roles and responsibilities in connection with the fire alarm system. It also needs to be the duty of the responsible person to ensure that necessary steps are taken to avoid situations that are detrimental to the standard of protection afforded by the system and to ensure that the level of false alarms is minimized.

47.2 Recommendations

The following recommendations apply.

a) A single, named responsible person should be appointed to supervise all matters pertaining to the fire alarm system. The responsible person should be given sufficient authority to carry out the duties described in this sub-clause and should normally be the keeper of the documentation as described in Clause **40**.

b) The responsible person should ensure that the control and indicating equipment is checked at least once every 24 h to confirm that there are no faults on the system.

c) The responsible person should ensure that arrangements are in place for testing and maintenance of the system in accordance with the recommendations of Section 6 of this standard.

d) The responsible person should ensure that the system log book (see Clause **48**) is kept up to date and is available for inspection by any authorized person (e.g. representatives of enforcing authorities and property insurers).

e) The responsible person should ensure that all relevant occupants of the protected premises are instructed in the proper use of the system. Particular care should be taken to ensure that relevant occupants are able to interpret fire, pre-alarm (see **47.3**) and fault indications, and that they are adequately familiar with the appropriate controls, including those associated with initiation of fire alarm signals, silencing of fire alarm signals and resetting the system. It should also be ensured that all occupants are aware of the measures necessary to avoid the generation of false alarms. Relevant occupants should also be instructed in the facilities for disablement and the circumstances in which they should, and should not, be used. In premises in multiple occupation, it should be ensured that sufficient representatives of each occupier are instructed.

NOTE Different levels of instruction might be necessary for different occupants.

f) The responsible person should ensure that appropriate action is taken to limit the rate of false alarms [see **30.2**g), **30.2**h) and **35.2.7.3**)].

g) The responsible person should ensure that a clear space of at least 500 mm is preserved in all directions around and below every fire detector, and that all manual call points remain unobstructed and conspicuous.

h) The responsible person should establish a liaison between those responsible for changes in, or maintenance of, the building fabric (including redecoration, etc.) to ensure that the work does not unnecessarily compromise the protection afforded by the system, create system faults or cause false alarms (see Section 3). If structural or occupancy changes occur or are planned, the responsible person should ensure that any necessary changes to the fire alarm system are considered at an early stage.

i) When changes are made to the system, the responsible person should ensure that record drawings and operating instructions, supplied in accordance with the recommendations of **40.2**b) and **40.2**c) respectively, are updated.

j) The responsible person should ensure that the following spare parts are held within the premises:

1) six frangible elements and appropriate tools for manual call points, unless there are less than twelve manual call points in the protected premises in which case only two spare frangible elements with appropriate tools need be held;

2) such other spare parts agreed between the user and the organization responsible for servicing the system.

47.3 Action in the event of pre-alarms

A pre-alarm can be a response to a slow growing fire or to indicate detector contamination. Whatever the reason, the following actions should be taken:

a) determine and thoroughly inspect the area from whence the pre-alarm has originated;

b) if a fire is discovered, carry out the pre-determined fire routine;

c) if no fire is discovered, record the events or activities near the suspect detector in the log book and, if there is need for work to be undertaken on the fire alarm system, inform the maintenance company.

48 Log book

48.1 Commentary

A log book needs to be kept for the purpose of recording all events that occur in respect of the system, including fire signals, fault signals and work on the system. This information may be of value to the organization that services the system and if special action is taken to address false alarm problems. The log book might be required under certain fire safety legislation (such as the Fire Precautions Act 1971 [2]).

48.2 Recommendations

NOTE A model format for a log book is contained in Annex F.

The following information should be recorded in the log book:

a) the name of the responsible person;

b) brief details of maintenance arrangements;

c) dates and times of all fire alarm signals (regardless of whether the signal is a false alarm or is initiated as the result of a test, fire drill or genuine fire); if the fire alarm signal has resulted from the operation of a manual call point or fire detector, the device and its location should be recorded;

d) causes, circumstances surrounding and category of all false alarms (see Section 3);

e) dates, times and types of all tests;

f) dates, times and types of all faults and defects;

g) dates and types of all maintenance (e.g. service visit or non-routine attention).

 © BSI 15 October 2002

Annex A (informative)
Choice of appropriate category of fire detection and alarm system

This annex describes the Category of system that is typically installed in various types of premises. The information in this annex is not intended to constitute recommendations, but simply provides information on custom and practice, and on the conventional interpretation of fire safety legislation. Decisions regarding the appropriate Category of system for any specific building rest with the authorities responsible for enforcing legislation in the building: there can be more than one such enforcing authority.

Table A.1 — Choice of appropriate category of a fire detection and alarm system

Type of premises	Typical Category of system	Comments
Common places of work, such as offices, shops, factories, warehouses and restaurants	M or P2/M or P1/M	A Category M system normally satisfies the requirements of legislation. It is, however, often combined with a Category P system to satisfy the requirements of insurers, as company policy for protection of assets, or to protect against business interruption.
Hotels and hostels	L1 or L2	In bedroom areas, the design requirements are usually based on the recommendations for a Category L3 system. Detectors are, however, typically installed in most other rooms and areas, as a fire in almost any area of the building could pose a threat to sleeping occupants; the system Category is, therefore, at least L2. In practice, few, if any, areas are left unprotected and the system Category is effectively L1, except that a variation from the recommendations applicable to a Category L1 system may apply to the siting of heat, smoke or carbon monoxide detectors in bedrooms; this often follows the recommendations of **22.3**e) for detectors in a Category L3 system.
Large public houses (No residential accommodation)	M	—
Public houses with residential accommodation	L2	—
Schools, other than small single storey schools with less than 160 pupils	M or M/P2 or M/P2/L4 or M/P2/L5	System Category is normally based on a fire risk assessment. In many schools, a Category P system is installed to combat the hazard of arson. In schools that are partly occupied at certain times (e.g. during evening classes or community use), a Category L4 or L5 system is sometimes considered appropriate.
Hospitals	L1 (with possible minor variations)	Detailed guidance on areas to be protected and possible variations is given in HTM 82.
Places of assembly, (e.g. cinemas, theatres, nightclubs, exhibition halls, museums and galleries, leisure centres and casinos):		
Small premises (e.g. accommodating less than 300 persons)	M	—
Other premises	L1 to L4	L1 systems are often provided in large or complex buildings.

Table A.1 — Choice of appropriate category of a fire detection and alarm system (*continued*)

Type of premises	Typical Category of system	Comments
Transportation terminals	M/L5	—
Covered shopping centres	L1 to L3	The exact design needs to be "tailor made" and often forms part of a fire engineering solution.
Residential care homes	L1 to L3	L1 is regarded as appropriate for large premises.
Prisons	M/L5	—
Phased evacuation buildings	L3	—
Buildings in which other fire precautions, such as means of escape, depart from recognized guidance	M/L5	Automatic fire detectors are sited in such a way as to compensate for the lower standard in other fire precautions.
Buildings with "inner rooms", from which escape is possible only by passing through another ("access") room, where there is inadequate vision between the inner room and the access room	M/L5	Smoke detectors are sited in the access room.
Buildings in which automatic fire detection is required to operate other fire protection systems (e.g. magnetic door holders)	M/L5	Care is necessary to ensure that automatic fire detectors are sited such that cool smoke cannot pass below the level of the detectors that cause release of the magnetic door holders, and through the (still open) doors.
Situations in which fire could readily spread from an unoccupied area and prejudice means of escape from occupied areas	M/L4 or M/L5	Custom and practice does not involve siting automatic fire detectors in all unoccupied areas, such as plant rooms and storage areas.
Any building in which automatic fire detection is provided as a requirement of a property insurer or to attract an insurance premium discount	M/P1 or M/P2	—

Annex B (informative)
Typical noise levels in buildings

Table B.1 gives typical expected background noise levels for a range of building types. It should be borne in mind, however, that background noise levels can vary significantly from building to building of the same occupancy; likewise, occupancy can vary in any given building. Sound level readings for the table were taken, as far as possible, at the busiest periods and short-term bursts of very high-level or very low-level noise were ignored. For each type of building a typical range of background noise sound pressure levels is given.

On the whole, measurements for the table were made in large buildings. In some buildings, the range of background noise levels is very wide and the type of occupancy has been subdivided into, for example, quiet and noisy categories.

The table is intended only as a guide but where it is used to assess fire alarm system requirements, the higher of the two dB(A) figures in the appropriate range should always be used. Wherever possible, "real" measurements should be made in the building where the fire alarm system is to be installed.

 © BSI 15 October 2002

Table B.1 — Typical occupational noise levels (L_p)

Area			L_p dB(A)
Airport terminals:	check in, arrivals and departures concourses		59 to 72
	Gate rooms and pier walkways		54 to 64
	Customs	— baggage reclaim	63 to 71
		— channels	59 to 70
		— departure lounge	49 to 64
Arenas, auditoria[a]:	concert halls, cinemas, theatres, etc.		60 to 75
Banks, building societies:	public areas		50 to 64
Bus stations:	quiet		58 to 68
	noisy		63 to 73
Cafeterias	quiet		55 to 65
	noisy		68 to 78
Classrooms:	quiet		56 to 68
	noisy		64 to 72
Conference/meeting rooms:			40 to 45
Corridors:	uncarpeted:	— quiet	45 to 55
		— noisy	66 to 76
	carpeted		28 to 32
Courtrooms:			40 to 50
Dealing rooms:	computerized		60 to 70
	“traditional”		80 to 90
Exhibition halls:			63 to 73
Factories:	control rooms		70 to 75
	light assemblies		80 to 85
	heavy engineering		95 to 105
Hospitals:			See Note
Hotel bedrooms:	TV off		28 to 35
	TV on		60 to 70
Kitchens (commercial):			65 to 75
Leisure centres:	squash courts		65 to 80
	ice-rinks (public sessions)		69 to 80
	swimming/diving pools		72 to 79
	fun pools		81 to 87
	bowling		78 to 85
Libraries:	book/reading areas	— quiet	35 to 45
		— noisy (e.g. heavily air-conditioned	50 to 60
	reception		50 to 60
Museums, galleries:	quiet		48 to 60
	noisy		60 to 73
Offices:	cellular		40 to 50
	open plan		50 to 70
	noisy		70 to 85
Plant rooms:	boiler	— quiet	66 to 72
		— noisy	76 to 86
	air handling		84 to 87
	compressor		89 to 93

© BSI 15 October 2002

Table B.1 — Typical occupational noise levels (L_p) (*continued*)

Area			L_p dB(A)
Railway stations (surface):	waiting rooms		54 to 65
	concourses		60 to 66
	platforms	— electric trains	60 to 72
		— diesel trains	75 to 85
Restaurants:			72 to 75
Shop stores:	quiet		50 to 60
	noisy		65 to 75
Shopping malls:			70 to 75
Sports halls:	quiet		60 to 72
	noisy		72 to 82
	loud ball games		78 to 93
Warehouses:	quiet		47 to 63
	noisy		63 to 80

NOTE Special considerations apply in the case of hospitals because, for example, in many areas the fire signal is intended primarily for staff rather than patients. Detailed guidelines on sound levels that should be produced by the fire detection and alarm systems are given in HTM 82.

[a] In these occupancies, management procedures will normally be that performances cease prior to a general "Evacuate" signal being given; the background noise will then be significantly lower than that occurring during the performance. It is the latter noise level, as given here, that should be used for designing the system.

Annex C (normative)
Control and transmission equipment for tactile alarm devices provided for people with impaired hearing systems

C.1 Control and transmission equipment for tactile alarm devices provided for people with impaired hearing should be designed in accordance with the principles of BS EN 54-2, other than in respect of the colours used for visual indicators.

C.2 Since BS EN 54-2:1997 was not drafted to take account of tactile alarm devices provided for people with impaired hearing, care should be taken to ensure that the principles involved in each of the requirements of the standard are followed.

Special attention should be given to the following design considerations.

1) Mains failure or low battery condition at the control and transmission equipment should result in a suitable fault warning at the fire alarm control and indicating equipment within 30 min of its occurrence.

2) All other fault conditions that are required to be identified at the control and transmission equipment in order to satisfy the recommendations of **18.2** should result in a fault warning at the fire alarm control and indicating equipment within 100 s of their occurrence.

3) A visible indication should be given at the equipment by means of a separate light-emitting indicator while the equipment is supplied with power.

4) Multiple fire signals received at the equipment should not affect the transmission of fire warning signals.

5) Any controls that cause transmission of fire alarm signals to cease should only be capable of use at access level 2, as defined in BS EN 54-2.

6) Repeat transmission of fire alarm signals should continue until either manual action is taken or a reset signal is received from the fire alarm control and indicating equipment; repeat transmissions should not cease automatically after any pre-determined period or number of transmissions.

7) The correct operation of the system should not be reliant on any disk drive or volatile memory.

 © BSI 15 October 2002

Annex D (normative)
Method for calculating standby battery capacity

D.1 Valve regulated lead acid batteries

D.1.1 The minimum capacity of valve regulated lead acid batteries should be calculated in accordance with the following formula:

$$C_{min} = 1.25\ (T_1\ I_1 + D\ I_2/2)$$

where

C_{min} = minimum capacity of the battery when new at the 20 h discharge rate and at 20 °C in ampere–hours;

T_1 = total battery standby period in hours;

I_1 = total battery standby load in amperes;

I_2 = total battery alarm load in amperes;

D = a de-rating factor.

D.1.2 Where $C_{min}/20$ will be equal to or greater than I_2, it can be assumed that $D = 1$. When $C_{min}/20$ is less than I_2, the value of D should either be based on the battery manufacturer's data or should be 1.75.

D.1.3 In practice, C_{min} is unlikely to correspond exactly to an available battery capacity and therefore the next highest available capacity size should be used.

D.2 Batteries other than valve-regulated lead acid batteries

The minimum capacity of batteries, other than valve regulated lead acid batteries, should be determined by consultation with the battery manufacturer and should take into account the standby load, the alarm load, any required de-rating to take account of the higher current drawn in the alarm condition and a de-rating factor to take account of battery ageing during the anticipated life of the battery.

© BSI 15 October 2002

Annex E (informative)
Schematic for design against false alarms

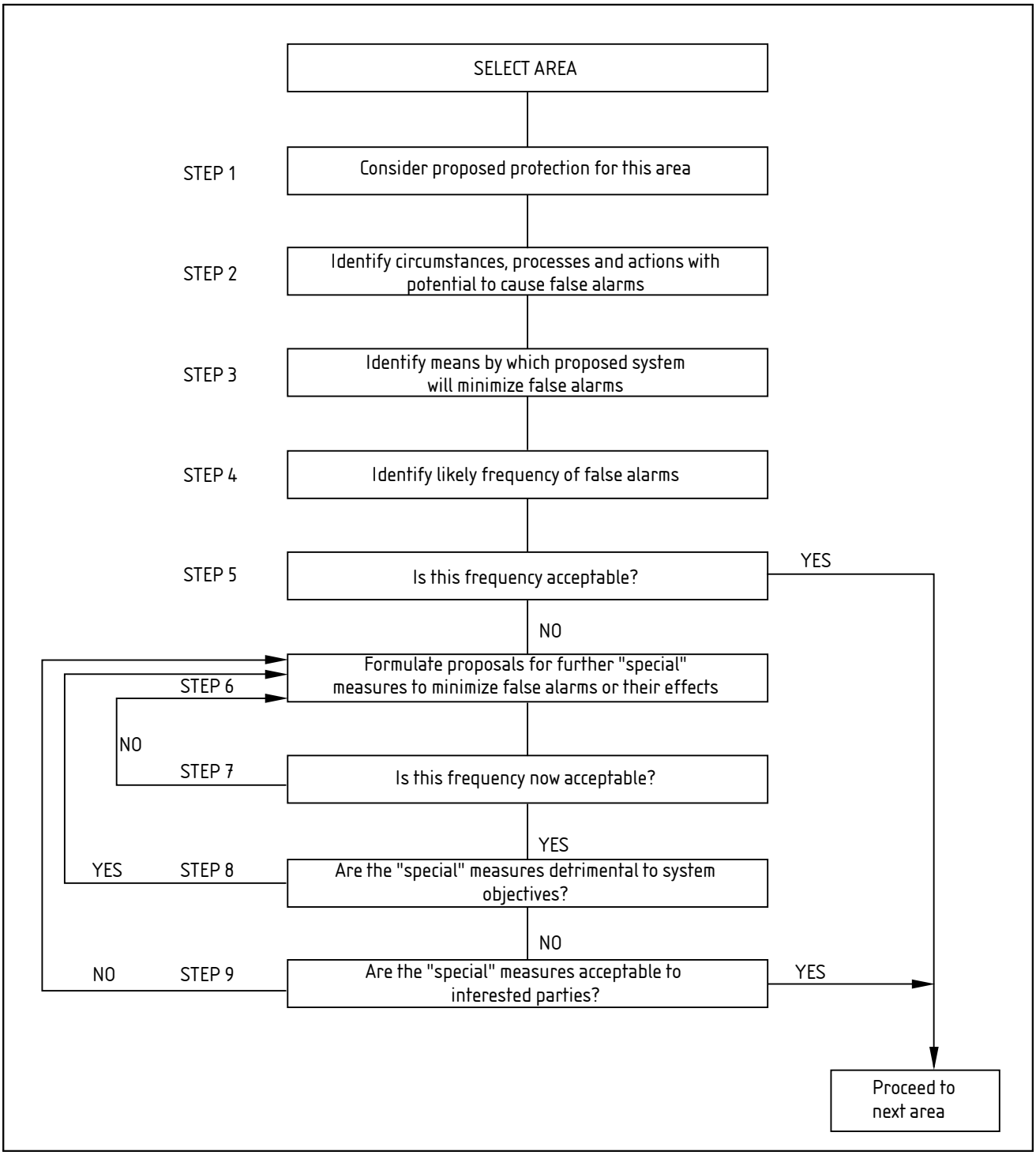

© BSI 15 October 2002

Annex F (informative)
Model format for system log book

Log Book

Foreword

It is recommended that this log book be maintained by a responsible person, who should ensure that every entry is properly recorded. This is necessary to satisfy the recommendations of BS 5839-1[1], compliance with which may be a requirement of legislation. If your premises are certificated under the Fire Precautions Act 1971, failure to keep a suitable log book may be a breach of the requirements of the certificate, which is a criminal offence.

In order to satisfy the recommendations of BS 5839-1, the following must be recorded.

— The name of the responsible person.
— Brief details of the maintenance arrangements.
— Dates and times of all tests, including fire drills.
— Dates and times of all fires to which the system responds.
— Dates and times of all false alarms.
— Causes, circumstances surrounding, and category, of all false alarms (if known).
— The identity of any manual call point or automatic fire detector that triggers any of the above fire alarm signals (if known).
— Dates, times and types of all faults and defects.
— Dates and types of all maintenance (e.g. service visit or non-routine attention).

Reference data

Address of protected premises: ……

……..

Responsible person: ……

The system was designed by:……..

The system was installed by:……..

The system was commissioned by:……..

The system was accepted by:……..

Verification was undertaken by:……

The system is maintained under contract by: ……until: ……

Telephone number:……, who should be contacted if maintenance is required.

Normal maximum attendance time for a maintenance technician is: ……

Expendable component replacement periods (list): ……

……..

……..

[1] BS 5839-1:2002 *Fire detection and alarm systems for buildings — Code of practice for system design, installation, commissioning and maintenance.*

Events other than false alarms or maintenance work

Date	Time	Event (e.g. test, fire alarm signal, fault)	Zone (where applicable)	Device (where applicable)	Action required (where applicable)	Date completed (where applicable)	Initials

False alarms

Date	Time	Zone	Device that triggered the alarm signal	Cause (if known)	Brief circumstances (where cause is unknown, record activities in the area)	Maintenance visit required (Yes/No)	Findings of maintenance technician (where applicable)	Category of false alarm	Further action required (where applicable)	Action completed (where applicable)

Maintenance work

Date	Time	Zone (where applicable)	Device (where applicable)	Reason for work	Work carried out	Further work required	Signature

© BSI 15 October 2002

Annex G (informative)
Model certificates

G.1 Design certificate

Certificate of design for the fire alarm system at:

Address:……

……..

I/we being the competent person(s) responsible (as indicated by my/our signatures below) for the design of the fire alarm system, particulars of which are set out below, CERTIFY that the said design for which I/we have been responsible complies to the best of my/our knowledge and belief with the recommendations of Section 2 of BS 5839-1:2002 for the system Category described below, except for the variations, if any, stated in this certificate.

Name (in block letters): ……Position: ……..

Signature:……Date:……..

For and on behalf of: ……..

Address: ……..

……..

……Postcode:……..

The extent of liability of the signatory is limited to the system described below.

System Category (see BS 5839-1, Clause **5**):……..

Variations from the recommendations of Section 2 of BS 5839-1 (see BS 5839-1, Clause **7**):

……..

……..

……..

……..

……..

Extent of system covered by this certificate:……..

……..

Brief description of areas protected (not applicable for Category M, L1 or P1 systems):

……..

……..

……..

……..

Measures incorporated to limit false alarms. Account has been taken of the guidance contained in Section 3 of BS 5839-1:2002 and, more specifically (tick as appropriate):

☐ The system is manual. Type and siting of manual call points takes account of the guidance contained in Section 3 of BS 5839-1.

☐ The system incorporates automatic fire detectors, and account has been taken of reasonably foreseeable causes of unwanted alarms, particularly in the selection and siting of detectors.

☐ An appropriate analogue system has been specified.

☐ An appropriate multi-sensor system has been specified.

☐ A time-related system has been specified. Details:……

……

☐ Fire signals from automatic fire detectors result initially in a staff alarm, which delays a general alarm/transmission of signals to an alarm receiving centre (delete as applicable) for ……..min.

☐ Appropriate guidance has been provided for the user to enable limitation of false alarms.

☐ Other measures as follows: ……..

……

Installation and commissioning

It is strongly recommended that installation and commissioning be undertaken in accordance with the recommendations of Section 4 and Section 5 of BS 5839-1:2002 respectively.

Soak test

☐ In accordance with the recommendations of **35.2.6** of BS 5839-1:2002, it is recommended that, following commissioning, a soak period of …… should follow. (Enter a period of not less than one week.)

☐ As the system incorporates no more than 50 automatic fire detectors, no soak test is necessary to satisfy the recommendations of BS 5839-1:2002.

Verification

Verification that the system complies with BS 5839-1:2002 should be carried out, on completion, in accordance with Clause **43** of BS 5839-1:

Yes ☐ No ☐ To be decided by the purchaser or user ☐

Maintenance

It is strongly recommended that, after completion, the system is maintained in accordance with Section 6 of BS 5839-1:2002.

User responsibilities

The user should appoint a responsible person to supervise all matters pertaining to the fire alarm system in accordance with the recommendations of Section 7 of BS 5839-1:2002.

© BSI 15 October 2002

G.2 Installation certificate

Certificate of installation for the fire alarm system at:

Address:……

……

I/we being the competent person(s) responsible (as indicated by my/our signatures below) for the installation of the fire alarm system, particulars of which are set out below, CERTIFY that the said installation for which I/we have been responsible complies to the best of my/our knowledge and belief with the specification described below and with the recommendations of Section 4 of BS 5839-1:2002, except for the variations, if any, stated in this certificate.

Name (in block letters): ……Position: ……

Signature:……Date:……

For and on behalf of: ……

Address: ……

……

……Postcode:……

The extent of liability of the signatory is limited to the system described below.

Extent of installation work covered by this certificate

……

……

……

……

Specification against which system was installed:

……

……

……

……

Variations from the specification and/or Section 4 of BS 5839-1 (see BS 5839-1, Clause **7**):

……

……

……

Wiring has been tested in accordance with the recommendations of Clause **38** of BS 5839-1:2002.
Test results have been recorded and provided to:……

Unless supplied by others, the "as fitted" drawings have been supplied to the person responsible for commissioning the system [see **36.2**m) of BS 5839-1:2002].

……

G.3 Commissioning certificate

Certificate of commissioning for the fire alarm system at:
Address:……
……

I/we being the competent person(s) responsible (as indicated by my/our signatures below) for the commissioning of the fire alarm system, particulars of which are set out below, CERTIFY that the said work for which I/we have been responsible complies to the best of my/our knowledge and belief with the recommendations of Clause **39** of BS 5839-1:2002, except for the variations, if any, stated in this certificate.

Name (in block letters): ……Position: ……
Signature:……Date:……
For and on behalf of: ……
Address: ……
……
……Postcode:……

The extent of liability of the signatory is limited to the systems described below.

Extent of system covered by this certificate
……
……
……
……

Variations from the recommendations of Clause **39** of BS 5839-1:2002 (see BS 5839-1:2002, Clause **7**):
……
……
……

- ☐ All equipment operates correctly.
- ☐ Installation work is, as far as can reasonably be ascertained, of an acceptable standard.
- ☐ The entire system has been inspected and tested in accordance with the recommendations of **39.2**c) of BS 5839-1:2002.
- ☐ The system performs as required by the specification prepared by:
  ……
  a copy of which I/we have been given.
- ☐ Taking into account the guidance contained in Section 3 of BS 5839-1:2002, I/we have not identified any obvious potential for an unacceptable rate of false alarms.
- ☐ The documentation described in Clause **40** of BS 5839-1:2002 has been provided to the user.

The following work should be completed before/after (delete as applicable) the system becomes operational:
……
……
……
……

The following potential causes of false alarms should be considered at the time of the next service visit:
……
……
……

Before the system becomes operational, it should be soak tested in accordance with the recommendations of **35.2.6** of BS 5839-1:2002 for a period of: ……(Enter a period of either one week, such period as required by the specification, or such period as recommended by the signatory to this certificate, whichever is the greatest, or delete if not applicable.)

© BSI 15 October 2002

G.4 Acceptance certificate

Certificate of acceptance for the fire alarm system at:
Address:……

……

I/we being the competent person(s) responsible (as indicated by my/our signatures below) for the acceptance of the fire alarm system, particulars of which are set out below, ACCEPT the system on behalf of:

……

……

Name (in block letters): ……Position: ……

Signature:……Date:……

For and on behalf of: ……

Address: ……

……

……Postcode:……

The extent of liability of the signatory is limited to the system described below.

Extent of system covered by this certificate

……

……

☐ All installation work appears to be satisfactory.

☐ The system is capable of giving a fire alarm signal.

☐ The facility for remote transmission of alarms to an alarm receiving centre operates correctly. (Delete if not applicable.)

The following documents have been provided to the purchaser or user:

☐ "As fitted" drawings.

☐ Operating and maintenance instructions.

☐ Certificates of design, installation and commissioning.

☐ A log book.

☐ Sufficient representatives of the user have been properly instructed in the use of the system, including, at least, all means of triggering fire signals, silencing and resetting the system and avoidance of false alarms.

☐ All relevant tests, defined in the purchasing specification, have been witnessed. (Delete if not applicable.)

The following work is required before the system can be accepted:

……

……

……

……

© BSI 15 October 2002

G.5 Verification certificate (optional)

Certificate of verification for the fire alarm system at:
Address:.....

.....

I/we being the competent person(s) responsible (as indicated by my/our signatures below) for the verification of the fire alarm system, particulars of which are set out below, CERTIFY that the verification work for which I/we have been responsible complies to the best of my/our knowledge and belief with the recommendations of Clause **43** of BS 5839-1:2002.

Name (in block letters): .....Position: .....
Signature:.....Date:.....
For and on behalf of: .....
Address: .....
.....
.....Postcode:.....

The extent of liability of the signatory is limited to the system described below.

Extent of system covered by this certificate
.....
.....
Scope and extent of the verification work:
.....
.....
.....
.....

☐ In my/our opinion, that as far as can reasonably be ascertained from the scope of work described above, the system complies with, and has been commissioned in accordance with, the recommendations of BS 5839-1:2002, other than in respect of variations already identified in the certificates of design, installation or commissioning.

☐ In my/our opinion, there is no obvious potential for an unacceptable rate of false alarms.

The following non-compliances with the recommendations of BS 5839-1:2002, have been identified (other than those recorded as variations in the certificates of design, installation or commissioning):
.....
.....
.....

© BSI 15 October 2002

G.6 Inspection and Servicing certificate

Certificate of servicing for the fire alarm system at:
Address:……

……

I/we being the competent person(s) responsible (as indicated by my/our signatures below) for the servicing of the fire alarm system, particulars of which are set out below, CERTIFY that the said work for which I/we have been responsible complies to the best of my/our knowledge and belief with the recommendations of Clause **45** of BS 5839-1:2002 quarterly inspection of vented batteries/periodic inspection and test/inspection and test over a 12 month period (delete as applicable), except for the variations, if any, stated in this certificate.

Name (in block letters): ……Position: ……

Signature:……Date:……

For and on behalf of: ……

Address: ……

……

……Postcode:……

The extent of liability of the signatory is limited to the system described below.

Extent of system covered by this certificate

……

……

Variations from the recommendations of Clause **45** of BS 5839-1:2002 for periodic or annual inspection and test (as applicable):

……

……

……

……

☐ Relevant details of the work carried out and faults identified have been entered in the system log book.

During the past 12 months, ……false alarms have occurred.

The above number of false alarms equates to ……false alarms per 100 automatic fire detectors per annum (for Category M systems enter "Not applicable").

The following work/action is considered necessary:

……

……

……

……

……

……

……

G.7 Modification certificate

Certificate of modification for the fire alarm system at:
Address:.....

.....

I/we being the competent person(s) responsible (as indicated by my/our signatures below) for the modification of the fire alarm system, particulars of which are set out below, CERTIFY that the said modification work for which I/we have been responsible has to the best of my/our knowledge and belief been carried out in accordance with the recommendations of **46.4** of BS 5839-1:2002, except for the variations, if any, stated in this certificate.

Name (in block letters): .....Position: .....
Signature:.....Date:.....
For and on behalf of: .....
Address: .....
.....
.....Postcode:.....

The extent of liability of the signatory is limited to the system described below.

Extent of system covered by this certificate
.....
.....
Variations from the recommendations of **46.4** of BS 5839-1:2002:.....
.....
.....
.....

☐ Following the modifications, the system has been tested in accordance with the recommendations of **46.4.2** of BS 5839-1:2002

☐ Following the modifications,"as fitted" drawings and other system records have been updated as appropriate.

I/we the undersigned confirm that the modifications have introduced no additional variations from the recommendations of BS 5839-1:2002, other than those recorded below:

Signed:.....

Capacity:.....

(e.g. maintenance organization, system designer, consultant or user representative)

© BSI 15 October 2002

Bibliography

Standards publications

BS 5306-2, *Fire extinguishing installations and equipment on premises — Specification for sprinkler systems.*

BS 5839-6, *Fire detection and alarm systems for buildings — Code of practice for the design and installation of fire detection and alarm systems in dwellings.*

BS 6266, *Code of practice for fire protection for electronic equipment installations.*

BS 6387, *Specification for performance requirements for cables required to maintain circuit integrity under fire conditions.*

BS 6651:1999, *Code of practice for protection of structures against lightning.*

BS 7807, *Code of practice for design, installation, and servicing of integrated systems incorporating fire detection and alarm systems and/or other security systems for buildings other than dwellings.*

BS 7974, *Application of fire safety engineering principles to the design of buildings — Code of practice.*

BS EN 50131-1, *Alarm systems — Intrusion systems — Part 1: General requirements.*

BS EN 60651, *Specification for sound level meters.*

BS EN ISO 9000 (all parts), *Quality management and quality assurance standards.*

IEC 60331 (relevant parts), *Tests for electric cables under fire conditions.*

PD 7974-4, *Application of fire safety engineering principles to the design of buildings — Part 4: Detection of fire and activation of fire protection systems.*

Other documents

[1] GREAT BRITAIN. Health and Safety (Safety Signs and Signals) Regulations 1996. London: The Stationery Office (TSO).

[2] GREAT BRITAIN. Fire Precautions Act 1971. London: The Stationery Office (TSO).

BSI — British Standards Institution

BSI is the independent national body responsible for preparing British Standards. It presents the UK view on standards in Europe and at the international level. It is incorporated by Royal Charter.

Revisions

British Standards are updated by amendment or revision. Users of British Standards should make sure that they possess the latest amendments or editions.

It is the constant aim of BSI to improve the quality of our products and services. We would be grateful if anyone finding an inaccuracy or ambiguity while using this British Standard would inform the Secretary of the technical committee responsible, the identity of which can be found on the inside front cover. Tel: +44 (0)20 8996 9000. Fax: +44 (0)20 8996 7400.

BSI offers members an individual updating service called PLUS which ensures that subscribers automatically receive the latest editions of standards.

Buying standards

Orders for all BSI, international and foreign standards publications should be addressed to Customer Services. Tel: +44 (0)20 8996 9001. Fax: +44 (0)20 8996 7001. Email: orders@bsi-global.com. Standards are also available from the BSI website at http://www.bsi-global.com.

In response to orders for international standards, it is BSI policy to supply the BSI implementation of those that have been published as British Standards, unless otherwise requested.

Information on standards

BSI provides a wide range of information on national, European and international standards through its Library and its Technical Help to Exporters Service. Various BSI electronic information services are also available which give details on all its products and services. Contact the Information Centre. Tel: +44 (0)20 8996 7111. Fax: +44 (0)20 8996 7048. Email: info@bsi-global.com.

Subscribing members of BSI are kept up to date with standards developments and receive substantial discounts on the purchase price of standards. For details of these and other benefits contact Membership Administration. Tel: +44 (0)20 8996 7002. Fax: +44 (0)20 8996 7001. Email: membership@bsi-global.com.

Information regarding online access to British Standards via British Standards Online can be found at http://www.bsi-global.com/bsonline.

Further information about BSI is available on the BSI website at http://www.bsi-global.com.

Copyright

Copyright subsists in all BSI publications. BSI also holds the copyright, in the UK, of the publications of the international standardization bodies. Except as permitted under the Copyright, Designs and Patents Act 1988 no extract may be reproduced, stored in a retrieval system or transmitted in any form or by any means – electronic, photocopying, recording or otherwise – without prior written permission from BSI.

This does not preclude the free use, in the course of implementing the standard, of necessary details such as symbols, and size, type or grade designations. If these details are to be used for any other purpose than implementation then the prior written permission of BSI must be obtained.

Details and advice can be obtained from the Copyright & Licensing Manager. Tel: +44 (0)20 8996 7070. Fax: +44 (0)20 8996 7553. Email: copyright@bsi-global.com.

BSI
389 Chiswick High Road
London
W4 4AL