BS 476 : Part 8 : 1972

Fire Tests

on Building Materials and Structures

Part 8. Test methods and criteria for the fire resistance of elements of building construction

British Standards Institution

THIS BRITISH STANDARD, having been approved by the Fire Standards Committee, was published under the authority of the Executive Board on 17 August, 1972.

© British Standards Institution, 1972.

BS 476 first published, December, 1932
First revision, July, 1953
Part 8 first published, August, 1972

ISBN: 0 580 07166 9

Copyright
Users of British Standards are reminded that copyright subsists in all BSI publications. No part of this publication may be reproduced in any form without the prior permission in writing of BSI. This does not preclude the free use, in the course of implementing the standard, of necessary details such as symbols and size, type or grade designations. Enquiries should be addressed to the BSI Secretariat.

Contract requirements
Attention is drawn to the fact that this British Standard does not purport to include all the necessary provisions of a contract. In order to keep abreast of progress in the industries concerned, British Standards are subject to periodical review. Suggestions for improvements will be recorded and in due course brought to the notice of the committees charged with the revision of the standards to which they refer.

Revision of British Standards
British Standards are revised, when necessary, by the issue either of amendment slips or of revised editions.

It is important that users of British Standards should ascertain that they are in possession of the latest amendments or editions. Full information on all BSI publications, numbering over 6000, will be found in the *British Standards Yearbook*. This information is supplemented by details published each month in *BSI News* of new publications, revisions and amendments.

BSI News is available to Subscribing Members of the Institution. All other publications may be purchased direct from Sales Department. Enquiries concerning subscribing membership, which has considerable advantages, will be welcomed, and should be made to Subscriptions Department. Both departments are located at:

101 Pentonville Road, London N1 9ND (Tel. 01-837 8801; Telex 23218).

The following references relate to the work on this standard:
Committee reference FSM/1 Draft for comment 69/25086

Co-operating Organizations

The Fire Standards Committee, under whose supervision this British Standard was prepared, consists of representatives of the following Government departments and scientific and industrial organizations:

Association of Municipal Corporations
British Constructional Steel Work Association
*Chief Fire Officers' Association
Confederation of British Industry
County Councils Association
*Department of Employment H.M. Factory Inspectorate
*Department of the Environment (Housing and Local Government)
Department of the Environment, Joint Fire Research Organization and Fire Offices Committee
*Department of the Environment (Public Building and Works)
*Department of Trade and Industry (Marine Division)
Fire Extinguisher Trades' Association
*Fire Offices Committee
*Fire Protection Association
*Greater London Council
Greater London Council (London Fire Brigade)
*Home Office
Industrial Fire Protection Association of Great Britain
Institution of Civil Engineers
*Institution of Fire Engineers
*Institution of Municipal Engineers
Ministry of Defence, Procurement Executive
National Council of Building Material Producers
*Royal Institute of British Architects

The Government departments and scientific and industrial organizations marked with an asterisk in the above list, together with the following, were directly represented on the committee entrusted with the preparation of this British Standard:

Asbestos Cement Manufacturers' Association
Association of British Roofing Felt Manufacturers
Association of Industrialised Building Component Manufacturers Ltd.
Association of Manufacturers of Mineral Fibre Insulation
British Constructional Steelwork Association
British Fire Services Association
British Plastics Federation
British Rubber Manufacturers' Association Ltd.
British Steel Industry
Building Board Manufacturers' Association of Great Britain Ltd.
Chemical Industries Association
Department of Education and Science
Department of the Environment, Building Research Establishment (Princes Risborough Laboratory)
Department of the Environment, Fire Research Station
Electricity Council, the Central Electricity Generating Board and the Area Boards in England and Wales
Engineering Equipment Users' Association
Felt Roofing Contractors' Advisory Board
Fibre Building Board Development Organisation Ltd
Gypsum Products Development Association
Leathercloth and Coated Fabrics Manufacturers' Association
Mastic Asphalt Council and Employers' Federation
Ministry of Defence (Navy)
National Coal Board
National Federation of Plumbers and Domestic Heating Engineers
Rubber and Plastics Research Association of Great Britain
Timber Research and Development Association
United Kingdom Antimony Oxide Manufacturers' Association
United Kingdom Atomic Energy Authority
Wood Wool Building Slab Manufacturers' Association
Individual manufacturers

8202–7–1.5k–B

Licensed copy:Gravesham Borough Council, 16/03/2006, Uncontrolled Copy, © BSI

BSI

BS 476 : Part 8 : 1972
UDC 614.841.332 : 620.1 : 699.81

Fire Tests

on Building Materials and Structures

Part 8. Test methods and criteria for the fire resistance of elements of building construction

Amendments issued since publication

Amd. No.	Date of issue	Text affected
1873.	January 1976.	Incorporated in this reprint.
3816	November 1981	Incorporated in this reprint

British Standards Institution · 2 Park Street · London W1A 2BS
Telephone 01-629 9000
Telex 266933

BS 476 : Part 8 : 1972

Contents

	Page
Co-operating organizations	Inside cover
General Foreword	2
Part 8. Test methods and criteria for the fire resistance of elements of building construction	5
Foreword.	3
1. General	
1.1 Scope	5
1.2 Details of specimen	5
1.3 Loading and restraint	5
1.4 Test procedure	6
1.5 Criteria of failure	7
1.6 Test results	8
1.7 Determination of fire resistance	8
1.8 Test report	8
2. Walls and partitions	
2.1 Details of specimen	8
2.2 Loading and restraint	8
2.3 Method of test	9
2.4 Observations during test	9
2.5 Determination of fire resistance	9
3. Floors and flat roofs	
3.1 Details of specimen	9
3.2 Loading and restraint	9
3.3 Method of test	10
3.4 Observations during test	10
3.5 Determination of fire resistance	10
3.6 Test report	10
4. Columns	
4.1 Details of specimen	10
4.2 Loading and restraint	10
4.3 Method of test	10
4.4 Observations during test	11
4.5 Determination of fire resistance	11
5. Beams	
5.1 Details of specimen	11
5.2 Loading and restraint	11
5.3 Method of test	11
5.4 Observations during test	11
5.5 Determination of fire resistance	11
5.6 Test report	11
6. Suspended ceilings protecting steel beams	
6.1 Details of specimen	11
6.2 Method of test	11 A
6.3 Observations during test	11 A
6.4 Determination of performance	12
6.5 Test report	12
7. Door and shutter assemblies	
7.1 Details of specimen	12
7.2 Method of test	13
7.3 Observations during test	13
7.4 Determination of fire resistance	13
7.5 Test report	13
8. Glazing	
8.1 Details of specimen	14
8.2 Method of test	14
8.3 Observations during test	14
8.4 Determination of fire resistance	14
8.5 Test report	14
9. Ceiling membranes	*As added November*
9.1 General	15
9.2 Details of specimen	15
9.3 Draught screen	16
9.4 Method of test	16
9.5 Observations during test	16
9.6 Determination of fire resistance	17
9.7 Test report	17
Figures	
1. Standard time-temperature curve	15
2. Thermocouple weight	17
3. Furnace thermocouple assemblies'.	18

General Foreword

BS 476 was first published as a single volume in 1932. A revision was published in three Parts as follows:

Part 1: 1953. Fire tests on building materials and structures.
Part 2: 1955. Flammability test for thin flexible materials.
Part 3: 1958. External fire exposure roof test.

In the present revision the three sections of Part 1 covering tests for combustibility of materials, surface spread of flame for materials and fire resistance of structures have been prepared as separate Parts and given new Part numbers. As each of these Parts is issued it will supersede the relative section of Part 1. Part 2 : 1955 has been withdrawn as a result of publication of BS 2782, ' Methods of testing plastics ', Part 5, ' Flammability '. In order to avoid confusion none of the new Parts will be numbered 1 or 2.

Licensed copy:Gravesham Borough Council, 16/03/2006, Uncontrolled Copy, © BSI

This in effect means that the standard will comprise the following parts:

Part 3. External fire exposure roof tests.
Part 4. Non-combustibility test for materials.
Part 5. Ignitability test for materials.
Part 6. Fire propagation tests for materials.
Part 7. Surface spread of flame tests for materials.
Part 8. Test methods and criteria for the fire resistance of elements of building construction.

Other tests being studied may result in the issue of further Parts.

As part of BSI's programme of metrication this standard is expressed in metric terms. The metric values are given in SI units: for further information reference should be made to BS 3763, 'The International System of units (SI)'.

Foreword

Fire resistance tests enable elements of construction to be assessed according to their ability to retain their stability, to resist the passage of flame and hot gases and to provide the necessary resistance to heat transmission. The term 'fire resistance' relates to complete elements of construction, and not to the individual materials of which the elements are composed.

Investigations in many countries have added considerably to knowledge of fire resistance since the last revision of BS 476. There is general agreement throughout the world on the aims and methods for making tests, and this agreement facilitated the work of a technical committee of the International Standards Organization in drafting a Recommendation for fire resistance tests. In this revised standard the ISO Recommendation 834* has been used as a model, departures from it being made only where particular requirements in this country rendered it necessary. The adoption of the ISO Recommendation has the advantage that it will facilitate the international exchange of data. Apart from differences in presentation the only important divergence is the inclusion of methods of test for door and shutter assemblies, for glazing and for suspended ceilings, which have not yet been incorporated in the ISO Recommendation.

The following are the main modifications to the previous issue of this standard:

(1) *Scope.* The scope of the standard has been enlarged to include the testing of suspended ceilings. Their performance is judged by the protection they are able to provide to steel beams supporting a floor.

(2) *Time/temperature curve.* The time/temperature curve, which has been in use since its adoption for the first edition of BS 476 in 1932, was defined by a number of arbitrary points. There are advantages for computation using data derived from tests in having a curve of a mathematical function. Such a curve has been chosen by ISO and adopted in this standard. It gives a time/temperature relationship which does not vary significantly from the previous standard curve.

(3) *Size of specimen.* The minimum dimensions of test specimens have been altered to bring them generally into line with the ISO Recommendation, based on metric units. Reductions have been made in the minimum sizes of walls and partitions, and the widths of floors and roofs, while increases have been made in the minimum spans of floors, roofs and beams.

(4) *Performance of test specimens.* In the earlier standard, specified grading periods were accorded to the test specimen. This was considered to be restrictive and grading periods are now replaced by quoting the actual time to failure (in minutes) under each of the relevant criteria.

(5) *Temperature measurement.* Furnace temperatures are measured as in the earlier standard but the method of measuring temperatures on the unexposed face of the specimen has been changed.

(6) *Passage of flame and gases.* The earlier standard was too subjective in defining the critical size of cracks, fissures or other orifices, and a test has been specified involving the use of cotton wool pads. The standard provides for the furnace atmosphere being at a pressure slightly above atmospheric pressure.

(7) *Loading.* This standard permits the test load to be such that stresses lower than the maximum permissible value are produced in the specimen when this is considered to be more representative of the use of the element in practice.

* ISO/R 834, 'Fire resistance tests of structures'.

BS 476 : Part 8 : 1972

The requirements for reloading were found in practice to create difficulties in determining the point at which heating should be terminated to ensure that the residual strength of the specimen would be adequate. While retaining the method of earlier editions of the standard a supplementary requirement has been added, enabling a fire resistance period to be assigned to constructions which collapse during heating. This is achieved by estimating the time for termination of heating when successful compliance with the reload requirement will be realized.

(8) *Testing of walls.* Procedures have been introduced for testing external walls with openings, and for testing walls containing columns and beams.

(9) *Testing of floors and beams.* Deflection is used in this standard as an additional criterion of failure.

(10) *Door assemblies.* This standard enables door assemblies to be tested and their performance judged either on the basis of the criteria for fire resistance applicable to walls and partitions or alternatively on the basis of stability and integrity only.

(11) *Test report.* To make the test reports as useful as possible, guidance is given on the minimum information that should be included.

(12) *Presentation.* The layout of this standard has been altered. The methods of test for various forms of construction are individually specified to make the standard easier to use.

The previous edition of the standard mentioned that an impact test had been deleted. During the course of the current revision consideration was given to reintroducing some form of impact test as well as an abrasion test. Work on the subject in the United States was studied. The conclusion was reached that although such tests were needed, insufficient information was available at this stage to enable such tests to be specified in this revision.

The use of the term ' fire endurance ' in the place of ' fire resistance ' was suggested in the previous edition of the standard. It was the general opinion, however, at the time of this revision that the term ' fire resistance ' has gained general international approval and that any change would be undesirable.

Attention has been drawn to the hazard of heat radiation from uninsulated constructions such as from glazing and from some doors; the measurements proposed would enable safe distances to be computed for the storage or installation of combustible materials in the vicinity of such constructions.

Some consideration was given to the wider problems of composite constructions and of junctions between elements (such as wall and floor assemblies), but in the absence of any data on their performance and of testing facilities for such structures it was not possible to provide appropriate test procedures. Over the next few years it is hoped that sufficient information will become available to enable a standard to be produced.

Licensed copy:Gravesham Borough Council, 16/03/2006, Uncontrolled Copy, © BSI

British Standard Fire Tests
on
Building Materials and Structures
Part 8. Test methods and criteria for the fire resistance of elements of building construction

1. General

1.1 Scope

This Part of this British Standard specifies heating conditions, methods of test and the criteria for the determination of the fire resistance of elements of building construction. The tests are appropriate to the following:

Walls and partitions (loadbearing and non-loadbearing)
Floors
Flat roofs
Columns
Beams
Suspended ceilings protecting steel beams
Door and shutter assemblies
Glazing
Ceiling membranes

1.2 Details of specimen

1.2.1 Size. The specimen shall be full size whenever possible.

1.2.2 Construction. The test shall be made on a specimen which is representative of the element of construction. For example, a partition shall include at least one of each type of joint; the method of fixing and supporting the components, the finishes and workmanship used shall be as intended in service. The materials and standard of workmanship of the test specimen shall be representative of those applying in practice, such as defined by relevant British Standards and Codes of Practice.

The testing laboratory can request or carry out tests to establish those properties of the materials which may be necessary for the interpretation of the results of a fire resistance test.

1.2.3 Conditioning. The specimen shall be conditioned to approximate to the state of strength and moisture content which the element is expected to attain when in service in a building.

NOTE. The fire resistance test should not be made until the specimen has reached equilibrium with the laboratory atmosphere. This is determined by measurement of weight or of relative humidity at suitable points within the section of the specimen or of a representative sample. During the conditioning period it is desirable that the laboratory atmosphere should not exceed 70% r.h. Drying may be either under natural or controlled conditions, but drying at temperatures exceeding 60 °C should not be carried out if it will result in abnormal changes in the properties of the specimen.

1.3 Loading and restraint

1.3.1 Loading. Before the heating period, a loadbearing specimen shall be subjected to a loading which produces stresses of the same nature and of the same order of magnitude as would be produced at normal temperatures in the full-size element by the maximum permissible loads which the element is capable of carrying when designed in accordance with the requirements of the appropriate British Standards or Codes of Practice; loads other than these may be applied only by agreement between the sponsor of the test and the testing laboratory. The load shall be maintained constant during the test period.

1.3.2 Restraint. The methods adopted for supporting or restraining the ends or sides of a specimen during test shall be as far as possible similar in nature to those which would be applied to the element in service.

Where these conditions cannot be defined or applied the procedure is indicated in the appropriate clauses dealing with particular elements.

BS 476 : Part 8 : 1972

1.4 Test procedure

1.4.1 Furnace. The specimen shall be heated as specified in **1.4.2** in a furnace which can produce a positive pressure in accordance with the requirements of **1.4.4.**

1.4.2 Standard heating conditions. The temperature of the furnace shall be controlled to vary with time as closely as possible in accordance with the following relationship:

$T - T_0 = 345 \log_{10} (8t + 1)$

where t = time of test in minutes,

T = furnace temperature in °C at time t, and

T_0 = initial furnace temperature in °C.

The temperature T_0 shall be between 10 °C and 40 °C.

The relationship is illustrated by the following points calculated by means of the above formula to give the standard time/temperature curve (see Fig. 1):

Time t min	Temperature rise in furnace ($T - T_0$) °C
5	556
10	659
15	718
30	821
60	925
90	986
120	1029
180	1090
240	1133
360	1193

The accuracy of furnace control shall be such that:

(1) During the first ten minutes of test the area under the curve of mean furnace temperature does not vary by more than ± 15% of the area under the standard curve.

(2) During the first half-hour of test the area under the curve of mean furnace temperature does not vary by more than ± 10% of the area under the standard curve.

(3) For any period after the first half-hour of test the area under the curve of mean furnace temperature does not vary by more than ± 5% of the area under the standard curve.

(4) At any time after the first ten minutes the mean furnace temperature does not differ from the standard curve by more than ± 100 °C.

When testing glazing and uninsulated doors and shutters the maximum tolerance given in (2) is permitted for tests of any duration.

1.4.3 Measurement of furnace temperature. The temperature shall be measured by furnace thermocouples (see figure 3) symmetrically arranged within the furnace with measuring junctions which shall consist of either:

(1) bare nickel-chromium/nickel-aluminium wires, 0.75 mm to 1.50 mm in diameter, welded or crimped together at their ends and supported and insulated from each other in a twin bore porcelain insulator except that the wires for 25 mm approximately from the weld or the crimp shall be exposed and separated from each other by at least 5 mm; such thermocouples shall be replaced after 6 h exposure or be re-calibrated after every 6 h of use; or

(2) nickel-chromium/nickel-aluminium wire contained within a mineral insulation and in a heat resisting steel sheath of diameter 1.5 mm, the hot junctions being electrically insulated from the sheath. The thermocouple hot junction shall project 25 mm from a porcelain insulator.

Each thermocouple hot junction shall be supported so that it is 100 ± 10 mm from the nearest point of the test specimen at the start of the test. Provision shall be made to maintain the thermocouple hot junction between 50 mm and 150 mm from the face of the specimen during the test should any deflection or distortion of the test specimen take place.

The number of thermocouples shall be as required by relevant clauses dealing with particular elements and they shall be arranged symmetrically within the furnace. The furnace temperature shall be deemed to be the average of the temperatures given by these thermocouples.'

Licensed copy:Gravesham Borough Council, 16/03/2006, Uncontrolled Copy, © BSI

3

6

1.4.4 Determination of integrity. When testing for integrity the upper part of the furnace shall be maintained at a positive pressure of 15 ± 5 N/m² (1.5 ± 0.5 mm water gauge).

The method for determining whether a crack or an opening in the specimen is one through which flames and hot gases can pass is by holding a cotton wool pad close to any aperture in the specimen under test.

The pad shall not be in contact with the element and shall be not more than 30 mm from the aperture, located centrally over it in a plane parallel to the surface of the specimen. The pad shall be applied at frequent intervals and held in position for not less than 10 s to determine if hot gases can cause its ignition. The pad shall not be re-used.

The cotton wool used for the test shall consist of new undyed and soft fibres without any admixture of artificial fibres. A pad shall be cut measuring approximately 100 mm square by 20 mm thick and weighing between 3 g and 4 g. The pad shall be conditioned by drying in an oven at 100 °C for at least a half-hour. The pad shall be attached by means of wire clips to a 100 mm × 100 mm frame of approximately 1 mm diameter wire. A wire handle approximately 750 mm long attached to the frame facilitates its use.

Other methods shall be permitted only where the cotton wool test cannot be carried out as mentioned in **7.4** and **8.4**.

1.4.5 Measurement of insulation. Temperatures on the unexposed face of the specimen apart from any glazing shall be measured by means of thermocouples, each with its junction attached to the centre of the face of a 12 mm diameter copper disc 0.2 mm thick which shall be secured to the surface of the specimen at the required position. The disc shall be covered with an oven dry asbestos pad 30 mm square by 2 mm thick and the thermocouple wires shall have a diameter not exceeding 0.5 mm. The disc and the pad shall be fixed to the surface in such a way as to ensure that the disc makes intimate contact, e.g. by pins, tape or an adhesive. Temperatures shall be measured to an accuracy of at least ± 1.5%.

1.4.6 Observations during test.

1.4.6.1 *Stability.* Note shall be made of the deformation of the specimen, occurrence of collapse, or any other factor which could affect its stability.

1.4.6.2 *Integrity.* In elements which have a separating function the presence of cracks or other openings which result in any flaming of the cotton wool pad described in **1.4.4** shall be noted.

3 In addition the presence of any sustained flaming, having a duration greater than 10 s, on the unexposed face of the specimen shall be noted.'

1.4.6.3 *Insulation.* In elements which have a separating function the temperature conditions of the unexposed face of the specimen shall be recorded, preferably continuously, but at least at intervals not exceeding 5 min.

1.4.6.4 *Additional information.* Throughout the test observations shall be made of all changes and occurrences which, although not criteria of performance, could create hazards in a building; for example, the emission of appreciable volumes of smoke or noxious vapours from the unexposed face of a separating element. These should be included in the test report observations.

1.4.7 Duration of test. The test specimen shall be heated in the prescribed manner until failure has occurred under all the relevant test criteria, except that by agreement between the sponsor of the test and the testing laboratory the test may be terminated at any time whether or not failure has occurred under any of the relevant test criteria.

1.5 Criteria of failure

1.5.1. Stability.

1.5.1.1 *Non-loadbearing constructions.* Failure shall be deemed to occur when collapse of the specimen takes place.

1.5.1.2 *Loadbearing constructions.* A loadbearing specimen shall support the test load during the prescribed heating period and also 24 h after the end of the heating period. However, should collapse occur during heating or during the reload test the notional maximum period for stability for such a specimen shall be construed as 80% of the time to collapse or the duration of heating if failure occurs in the reload test. In addition, failure for floors, flat roofs and beams shall be deemed to occur when a specimen deflects in excess of the limits specified in **3.5** and **5.5**.

3 '1.5.2 Integrity. Failure shall be deemed to occur when sustained flaming exists for an uninterrupted period of not less than 10 s on the unexposed face of the specimen, or when cracks or other openings exist through which flame or hot gases pass which cause flaming of the cotton wool pad as noted in 1.4.6.2.'

1.5.3 Insulation. Failure shall be deemed to occur when the mean temperature of the unexposed surface of the specimen increases by more than 140 °C above the initial temperature, or the temperature of the unexposed surface increases at any point by more than 180 °C above the initial temperature.

BS 476 : Part 8 : 1972

1.6 Test results

The test results shall be stated in terms of the time in minutes from the start of the test until failure has occurred under one or all of the criteria in **1.5**, or if no failure has occurred, until the test is terminated. For example, a test result as follows:

Stability	120
Integrity	120
Insulation	15

would mean that a specimen failed in respect of insulation after 15 min but complied with the other requirements for at least 120 min.

1.7 Determination of fire resistance

1.7.1 General application. The fire resistance of an element of construction shall be the time in minutes from the start of the test on the specimen until failure first occurs under any one of the criteria defined in **1.5.1**, **1.5.2** or **1.5.3** or, if no failure occurs, until the test is terminated.

1.7.2 Specific application. Where, for a particular application, either or both of the requirements of **1.5.2** and **1.5.3**, if relevant, are waived or their fulfilment is required only for some predetermined period, or a loadbearing element is not subjected to the maximum loading described in **1.3.1**, the element may then be regarded, for the purpose of the particular application only, as providing a fire resistance equal to the period for which the remaining test requirement or requirements are fulfilled.

1.8 Test report

The test report shall contain the following information:

(1) Name of testing laboratory.

(2) Name of sponsor.

(3) Date of test.

(4) Name of manufacturer and trade name of element (if any).

(5) Details of construction of the specimen, together with drawings, and details of conditioning.

(6) Important physical properties of materials together with the source of information.

(7) Method of support and restraint.

(8) Test load and basis of calculation together with the maximum permissible load on the specimen.

(9) For asymmetrical separating elements the direction in which the specimen was tested and the reason for adopting this procedure (see **2.3.1** and **7.3**).

(10) Observations during test, including test results as provided for in **1.6**. Where a test is terminated before a failure has occurred under all the relevant criteria this shall be stated in the report.

(11) The fire resistance of the elements of structure as provided for in **1.7**.

2. Walls and partitions

2.1 Details of specimen

2.1.1 Size. When it is not possible to test a full size specimen the minimum dimensions of the part exposed in the furnace shall be:

width 2.5 m, height 2.5 m

2.1.2 Construction. A specimen may include a beam or columns which form an integral part of the element to establish the performance of the composite construction. A specimen may also include a door or glazing to establish the performance of the whole assembly.

2.2 Loading and restraint

2.2.1 Loading. A loadbearing specimen shall be subjected to a load computed as specified in **1.3.1**. An element which is intended to carry only its own weight shall be termed non-loadbearing and the corresponding test specimen shall have no external loads applied to it.

Licensed copy:Gravesham Borough Council, 16/03/2006, Uncontrolled Copy, © BSI

2.2.2 Restraint. The vertical edges of a specimen subjected to vertical loading shall be free from restraint. Non-loadbearing specimens shall be restrained on all sides unless allowance is specified for the element in service to permit thermal movement, when the appropriate edge conditions shall be simulated in the specimen.

2.3 Method of test

2.3.1 General. Specimens of elements which may be required to resist fire from either direction shall be tested in the direction considered as giving the lower fire resistance. In case of doubt tests shall be made to establish the fire resistance from either side.

Specimens of elements which may be required to resist fire from one direction only shall be tested from that direction.

Furnace temperatures shall be measured by means of thermocouples arranged so that there is not less than one thermocouple to each 1.5 m^2 of surface area.

2.3.2 Composite construction. Specimens of elements which incorporate a beam or column either built completely into the wall or with one or more exposed faces, shall be tested following the procedure outlined in **2.3.1.** Where the resistance of any part of the wall against penetration of fire is less than the resistance to collapse of the beam or column, in order to determine the fire resistance of the beam or column such part may be sealed as necessary on the outer side by a sheet of non-combustible insulation board not less than 25 mm thick and approximately 100 mm from the face. Where the built-in beam or column forms the boundary of an opening in the wall, the test shall be conducted following the procedure outlined in Section 4 or 5, as appropriate. Where a door is included in the specimen the conditions of Section 7 shall be applied.

2.4 Observations during test

The temperature of the unexposed face of the specimen shall be measured at not less than five points, one at approximately the centre of the area and one at approximately the centre of each quarter section. In the case of specimens incorporating glazing, the thermocouples shall be distributed as uniformly as possible, excluding any glazing. The mean temperature of the unexposed face shall be deemed to be the average of the temperatures measured at these points. Where, in the direction of heat flow, the specimen is not of uniform geometry or material, as for example in a partition of cavity construction, additional points of measurement will be required. In addition, temperatures shall be measured at any point including a joint that appears to be hotter than the standard locations at any time during the test. These temperatures shall not be used in computing the mean temperature but will be taken into account in determining compliance with the maximum temperature criterion (see **1.5.3**).

2.5 Determination of fire resistance

A wall or partition shall be judged on the compliance of the specimen with the three criteria specified in **1.5.** The fire resistance of the wall or partition shall be determined in accordance with the provisions of **1.7.**

3. Floors and flat roofs

3.1 Details of specimen

3.1.1 Size. When it is not possible to test a full size specimen, the minimum dimensions of the part exposed in the furnace shall be:

width 2.5 m, span 4 m

3.1.2 Construction. Where a ceiling treatment or a suspended ceiling is intended to contribute to the fire resistance of a floor or a flat roof the specimen shall incorporate the ceiling. If the ceiling is a suspended ceiling it shall comply with the provision of **6.1.2** for the construction of the specimen. The ceiling shall be installed as in service.

NOTE. Where it is required to ascertain only the fire resistance of a steel beam/suspended ceiling assembly the test described in Section 6 is appropriate.

3.2 Loading and restraint

3.2.1 Loading. The load to be applied to the specimen shall be computed in accordance with the requirements of **1.3.1** for the particular span and edge conditions.

BS 476 : Part 8 : 1972

3.2.2 Restraint. The support and restraint conditions shall comply with the requirements of **1.3.2** but where these cannot be defined the specimen shall be tested simply supported.

3.3 Method of test

The specimen shall be exposed to heat on its underside by means of a furnace which produces the conditions prescribed in **1.4.1**. Furnace temperatures shall be measured by thermocouples arranged so that there is not less than one thermocouple to each 1.5 m² of surface area.

3.4 Observations during test

The temperature of the unexposed face of the specimen shall be measured at not less than five points, one at approximately the centre of the area, and one at approximately the centre of each quarter section. Where, in the direction of heat flow, the specimen is not of uniform geometry or material, as for example in a hollow block floor, additional points of measurement will be required. The mean temperature of the unexposed face shall be deemed to be the average of the temperatures measured at these points, excluding those over joints. In addition, temperatures shall be measured at any point that appears to be hotter than the standard locations at any time during the test; these temperatures shall not be used in computing the mean temperature, but shall be taken into account to determine compliance with the maximum temperature criterion (see **1.5.3**).

Measurements shall be made of the maximum deflection of the specimen.

3.5 Determination of fire resistance

A floor or a flat roof shall be judged on the compliance of the specimen with the three criteria specified in **1.5**, and its fire resistance shall be determined in accordance with the provisions of **1.6**.

'The test specimen shall be deemed to have failed the stability requirements of **1.5.1** if it is no longer able to support the test load. For the purposes of this standard this may be taken as either of the following whichever is exceeded first:

(1) a deflection of $L/20$; or

(2) the rate of deflection, R, (in mm/min) calculated over 1 min intervals, on each minute from the commencement of the heating period, exceeds the limit set by the following equation

$$R = \frac{L^2}{9000d}$$

except that this rate of deflection limit shall not apply before a deflection of $L/30$ is exceeded

where L is the clear span of specimen (in mm)

d is the distance from the top of the structural section to the bottom of the design tension zone (in mm).'

3.6 Test report

Where the specimen includes a suspended ceiling the test report shall include the information required in **6.5**.

4. Columns

4.1 Details of specimen

4.1.1 Size. Where it is not possible to test a full size specimen the minimum height of the part exposed in the furnace shall be 3 m.

4.1.2 Construction. Where a specimen represents a column forming the sides of an opening in a wall, it shall be suitably shielded on the unexposed face or faces to represent the protection provided by the wall.

4.2 Loading and restraint

The specimen shall be tested with the appropriate end conditions under the load computed in accordance with the requirements of **1.3.1**.

Where the end conditions cannot be defined the specimen shall be restrained in position and direction.

4.3 Method of test

The specimen shall be exposed to heat from all radial directions by means of a furnace which produces the conditions prescribed in **1.4.2**. Furnace temperatures shall be measured by at least six thermocouples arranged on two faces of the specimen at approximately 1 m intervals.

Licensed copy:Gravesham Borough Council, 16/03/2006, Uncontrolled Copy, © BSI

4.4 Observations during test

The ability of the specimen to retain its loadbearing capacity shall be observed.

4.5 Determination of fire resistance

A specimen shall be judged for fire resistance by its compliance with the criterion of **1.5.1** only.

5. Beams

5.1 Details of specimen

5.1.1 Size. Where it is not possible to use a full size specimen, tests shall be carried out on a specimen with a minimum length for the part exposed in the furnace of 4 m.

5.1.2 Construction. Specimen beams which may in service be exposed to fire on three sides shall be provided on the upper surface with a deck or slab not less than 75 mm in thickness which shall not contribute significantly to the strength or stiffness of the beam. Where a ceiling is intended to contribute to the fire resistance of a beam the specimen shall incorporate the ceiling, which shall comply with the provision of **6.1.2**.

NOTE. Where it is required to ascertain only the fire resistance of a steel beam/suspended ceiling assembly the test described in Section 6 is appropriate.

5.2 Loading and restraint

5.2.1 Loading. The load to be applied to the specimen shall be computed in accordance with the requirements of **1.3.1** for the particular span and end conditions.

5.2.2 Restraint. The support and restraint conditions shall comply with the requirements of **1.3.2** but when these cannot be defined the specimen shall be simply supported.

5.3 Method of test

The test specimen shall be exposed to heat on its sides and soffit by means of a furnace which produces the conditions prescribed in **1.4.2**. Furnace temperatures shall be measured by at least six thermocouples symmetrically arranged on both sides of the specimen at approximately 1 m intervals.

5.4 Observations during test

The ability of the specimen to retain its loadbearing capacity shall be observed. Measurements shall be made of the deflection of the specimen. Temperature measurements are not required on the upper face of the slab.

5.5 Determination of fire resistance

A specimen shall be judged for fire resistance by its compliance with the criterion of **1.5.1** only.

'The test specimen shall be deemed to have failed the stability requirements of **1.5.1** if it is no longer able to support the test load. For the purposes of this standard this may be taken as either of the following whichever is exceeded first:

(1) a deflection of $L/20$; or

(2) the rate of deflection, R, (in mm/min) calculated over 1 min intervals, on each minute from the commencement of the heating period, exceeds the limit set by the following equation

$$R = \frac{L^2}{9000d}$$

except that this rate of deflection limit shall not apply before a deflection of $L/30$ is exceeded

where L is the clear span of specimen (in mm)

d is the distance from the top of the structural section to the bottom of the design tension zone (in mm).'

5.6 Test report

Where the specimen includes a suspended ceiling the test report shall include the information required by **6.5**.

6. Suspended ceilings protecting steel beams

NOTE. This Section provides a method of test for suspended ceilings, which measures the protection against fire a suspended ceiling provides to standard steel beams supporting a specified concrete deck. Although the test results are not directly applicable to all types of steel beam/floor deck assemblies, additional temperature measurements may be made during the test in order that the potential contribution of the ceiling to the protection against fire of other steel beam/floor deck assemblies can be assessed. Where it is required to ascertain directly by test the fire resistance of a particular floor construction with a suspended ceiling, the test described in Section 3 is appropriate. *As altered Jan. 1976*

6.1 Details of specimen

6.1.1 Size. When it is not possible to test a full size specimen the minimum dimensions of the part exposed in the furnace shall be 2.5 m × 4 m.

6.4 Determination of performance

The specimen ceiling shall be judged on its ability to provide protection to the steel beams enabling them to retain their loadbearing capacity when subjected to maximum design stresses. The limit of effective protection shall be deemed to have occurred when:

(1) one or more tiles or panels become dislodged;

'(2) with the loaded specimen:

(a) the beams are no longer able to support the test load. For the purposes of this standard this may be taken as either of the following whichever is exceeded first:

(i) a deflection of $L/20$ or

(ii) the rate of deflection, R, (in mm/min) calculated over 1 min intervals, on each minute from the commencement of the heating period, exceeds the limit set by the following equation

$$R = \frac{L^2}{9000d}$$

except that this rate of deflection limit shall not apply before a deflection of $L/30$ is exceeded

where L is the clear span of specimen (in mm)

d is the distance from the top of the structural section to the bottom of the design tension zone (in mm).

(b) the temperature of any beam exceeds a mean value of 550 °C or a maximum value of 650 °C.'

or (3) with the unloaded specimen the temperature of any beam at any measuring point exceeds 400 °C.

NOTE. Between the publication of BS 476, Part 1, 1953, and the present edition of the standard a considerable number of ceilings have been tested as unloaded specimens but against the temperature criteria of (2). With the publication of this revised standard it is recommended that suspended ceilings should in future be tested as loaded specimens against the criteria of (2) as being more closely related to practical use.

6.5 Test report

The test report shall include the information required in **1.8** together with the following:

(1) Details of the expansion joints in the specimen for the members supporting the ceiling, and other features considered essential for the stability of the system. The expansion allowance per unit length of the grid system or the spacing between expansion joints employed shall be stated.

(2) Details of any light fittings, recesses, openings and ducting incorporated in the specimen.

(3) The temperature curves for the steel beams.

7. Door and shutter assemblies

NOTE. This Section provides a method of test for doors and shutters used for fire protection of openings in elements of construction.

7.1 Details of specimen

7.1.1 Size. When a full size specimen cannot be tested the minimum overall dimensions shall be: width 2.5 m, height 2.5 m

7.1.2 Construction. The door or shutter assembly shall be representative of that to be used in practice and shall include all the essential hardware. The door or shutter assembly shall be mounted in a wall of the type in which it is expected to be used, particularly when it forms part of a prefabricated system. When this is not possible, the door or shutter assembly shall be mounted in a brick or concrete wall approximately 100 mm thick for tests of up to 2 h duration and approximately 200 mm thick for tests of longer duration. In the case of hinged doors the gaps between the door and the frame shall be representative of those obtained in practice and when this cannot be specified the gap shall be at least 3 mm between door edges and the frame. The threshold shall not be more than 250 mm above the bottom of the furnace chamber.

Licensed copy:Gravesham Borough Council, 16/03/2006, Uncontrolled Copy, © BSI

6.1.2 Construction. Steel beams of solid rolled or open web type weighing not more than 30 kg/m shall be used to support the ceiling. The beams, of adequate number and spacing to reproduce the suspension system as used in practice, shall be mounted in a suitable concrete frame. The top of the steel beams shall be covered with a concrete floor, 130 mm thick and made from lightweight aggregate concrete in the density range 1600 ± 100 kg/m^3, to provide a covering and when necessary the means for transmitting loads to the beams.

The ceiling shall be installed as in service, and the edges of the ceiling abutting the sides of the frame shall be supported by means representative of those used in practice.

The specimen shall, where intended in service, incorporate a light fitting, a recess for a light fitting, or an opening for a duct. Where an opening for a duct is incorporated the specimen shall include representative sections of ducting installed in the space over the ceiling. The ducting shall be connected to the duct opening and the materials, construction and size of the ducting and opening, and the installation, shall all be as in service.

6.2 Method of test

The specimen shall be loaded in such a way that the steel beams develop the maximum stresses for the size of the section and the span used in the test assembly. Alternatively, the test may be carried out without loading the assembly if the testing authority is satisfied that the integrity of the assembly will not be affected by the deformation of the beams. The specimen shall be exposed to heat on its underside by a furnace which produces the conditions specified in **1.4.2**. Furnace temperatures shall be measured by thermocouples so that there is not less than one thermocouple to each 1.5 m^2 of surface area.

6.3 Observations during test

The temperature of the steel beams shall be measured by not less than 6 thermocouples uniformly distributed on each beam and fixed on the inside of the lower flange of the beam midway between the web and the edge of the flange. Note shall be taken of the time at which any ceiling panel becomes dislodged.

As altered Jan. 1976

NOTE. To enable the making of assessments of the protection (as distinct from fire resistance) provided by the ceiling to other types of steel beam/floor deck assemblies, additional temperature measurements may be made, e.g. at the lower surface of the concrete floor.

Licensed copy:Gravesham Borough Council, 16/03/2006, Uncontrolled Copy, © BSI

7.2 Method of test

The specimen shall be exposed to heat on one face by means of a furnace controlled to produce the conditions specified in **1.4.2**. Furnace temperatures shall be measured by thermocouples arranged so that there is not less than one thermocouple to each 1.5 m^2 of surface area. A door or shutter which may be required to resist fire from either side shall be tested in the direction which will produce the lower fire resistance. When this direction cannot be identified duplicate tests shall be made so that the minimum fire resistance of the assembly can be determined.

7.3 Observations during test

The temperature on the unexposed face of the specimen shall be measured at not less than five points distributed as uniformly as possible over the unexposed face. The mean temperature of the unexposed face shall be deemed to be the average of the temperatures measured at these points. In addition, temperatures shall be measured at any point including a joint that appears to be hotter than the standard locations at any time during the test. These temperatures shall not be used in computing the mean temperature, but shall be taken into account to determine compliance with the maximum temperature criterion (see **1.5.3**).

In addition, measurements shall be made of the formation of cracks or gaps developing either in the door or shutter or between it and the frame, and where appropriate the time of ignition of the cotton wool pad described in **1.4.4** shall be noted.

For assessments to be made of the safe distances for the location of combustible materials from the unexposed side of the door the radiation flux shall be measured by a pyrometer located at a distance from the unexposed face of the door or shutter on its central axis such that the angle of incidence covers the width of the opening.

After cooling, the ability of the door to be opened shall be noted.

7.4 Determination of fire resistance

The door or shutter assembly shall be judged on the compliance of the specimen with the three criteria defined in **1.5**. The fire resistance of the door or shutter assembly shall be determined in accordance with the provisions of **1.6**.

Where the cotton wool test described in **1.4.4** cannot be used because of the level of radiation from the door, failure shall be deemed to have occurred under the criterion defined by **1.5.2** if an unobstructed gap or fissure exceeding 6 mm in width by 150 mm in length exists or develops in the door assembly. If sustained flaming for more than 10 s occurs on the unexposed face of the specimen it shall constitute failure under **1.5.2**.

7.5 Test report

The test report shall include the information required by **1.8** together with the following:

(1) The details of construction of the door and frame and details of the installation, furniture and fittings and any through metal connection, finishes, clearances and gaps between the door and the frame shall be fully recorded to ensure positive identification.

(2) Description of any glazing.

(3) If the procedure described in **1.5.2** has not been adopted to determine the passage of hot gases and flames, the size of the gaps which develop or enlarge during the test shall be fully recorded together with details of any sustained flaming.

(4) The test report may also include the recommended safe distances for the location of combustible materials from the face of the door.

(5) The performance of the specimen shall be expressed as in **1.6**. Where the unexposed face temperatures have not been measured due to absence of any insulation or presence of glazing in the construction of the door, it shall be expressed as:

Insulation –0

(6) Ability of door to be opened after cooling.

BS 476 : Part 8 : 1972

8. Glazing

NOTE. This Section provides a method of test for classifying a construction intended for light transmission.

8.1 Details of specimen

8.1.1 Size. When it is not possible to test a full size specimen the minimum dimensions of the part exposed in the furnace shall be:

2.5 m × 2.5 m

8.1.2 Construction. The specimen shall be mounted complete with frame and fixings, in a surround of the type in which it is expected to be used, particularly when it forms part of a prefabricated system. When this is not possible it shall be mounted in a brick or concrete surround.

8.2 Method of test

The specimen shall be mounted either vertically or horizontally depending on its intended purpose. One face of the specimen shall be exposed to heat by means of a furnace controlled to produce the conditions specified in **1.4.2**. The furnace temperature shall be measured by thermocouples arranged so that there is not less than one thermocouple to each 1.5 m^2 of surface area.

8.3 Observations during test

The time shall be measured from the start of the test to the formation of cracks or fissures and the occurrence of collapse. The size of cracks and fissures shall be recorded.

For assessment to be made of the safe distances for the location of combustible materials from the unexposed side of the specimen the radiation flux shall be measured by a pyrometer located at a distance from the unexposed face on its central axis such that the angle of incidence covers the width of the specimen.

8.4 Determination of fire resistance

The specimen shall be judged on its compliance with criteria in **1.5.1** and **1.5.2**. Where the cotton wool test described in **1.4.4** cannot be used because of the level of radiation then failure shall be deemed to have occurred under the criterion of **1.5.2**. if a crack or fissure exists or develops exceeding 6 mm in width by 150 mm in length.

8.5 Test report

The test report shall provide the information required by **1.8** together with the following:

(1) A full description of the materials and construction together with the details of method of fixing and the clearances allowed for expansion.

(2) The test report may also include safe distances for the location of combustible materials.

(3) The performance of the specimen shall be expressed as in **1.6** and the size of gaps which develop shall be indicated.

Licensed copy:Gravesham Borough Council, 16/03/2006, Uncontrolled Copy, © BSI

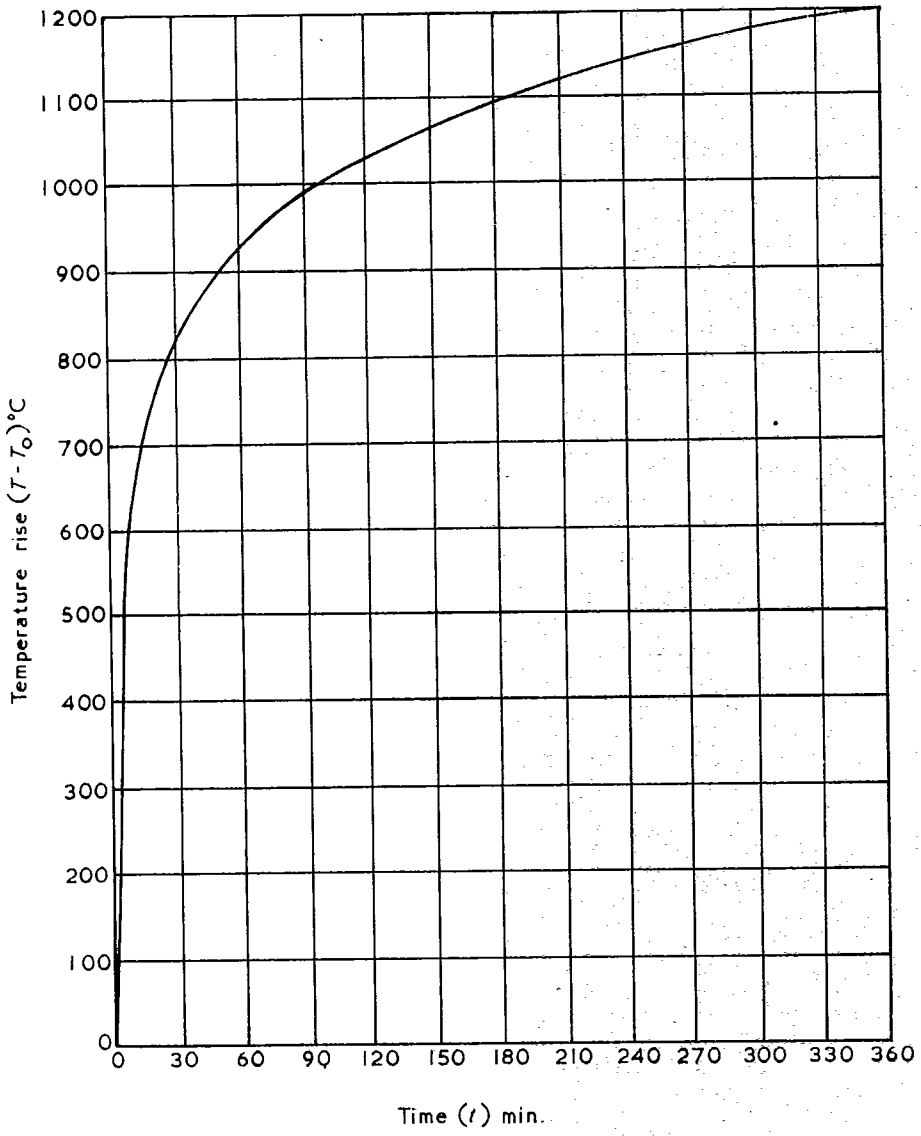

Fig. 1. Standard time-temperature curve

9. Ceiling membranes

as added November 1981

9.1 General

9.1.1 This clause describes a method of test for determining the fire resistance of a ceiling membrane (horizontal non-loadbearing partition) that is required to provide a separating function in a building. A typical example is an unloaded horizontal membrane separating a room from a roof cavity.

9.1.2 The results obtained from this test do not give any information about the stability of supporting members within or in contact with the ceiling membrane. Such information may be obtained by testing in accordance with the procedure given in clause 3.

9.2 Details of specimen

9.2.1 When it is not possible to test a full size specimen the minimum dimensions of the part exposed in the furnace shall be 2.5 m × 4 m.

9.2.2 A specimen of the membrane ceiling shall be tested together with its supporting framework and shall be installed as in service in a concrete or other suitable rigid frame. The edge of the ceiling abutting the sides of the frame shall be supported by means representing those used in practice. With all types of ceiling any insulating material that in service would be laid directly over the ceiling shall be included as part of the test specimen.

9.3 Draught screen

The specimen shall be surrounded by an imperforate vertical draught screen of suitable non-combustible material continuous round the perimeter and extending to a height of 500 ± 25 mm above the upper surface of the membrane.

9.4 Method of test

The specimen shall be exposed to heat on its underside by means of a furnace that produces the conditions prescribed in **1.4.1**. The pressure of the furnace atmopshere monitored 100 mm below the exposed surface shall be maintained at 15 ± 5 N/m² except during the first 10 min of the test.

Furnace temperatures shall be measured by thermocouples arranged as described in **1.4.3** so that there is not less than one thermocouple to each 1.5 m² of surface area.

9.5 Observations during test

9.5.1 The temperature of the unexposed face of the specimen, including any insulation, shall be measured as described in **1.4.5** at five points, one at approximately the centre of the area and one at approximately the centre of each quarter section. The mean temperature of the unexposed face shall be taken as the average of the temperature measured at those five positions.

9.5.2 Because of the lack of rigidity or the nature of the surface of some types of insulation the use of pins, tape or an adhesive to secure the thermocouple disc and pad as described in **1.4.5** may not be suitable. In such instances the thermocouple and disc shall be attached to the pad by an adhesive and the assembly shall be held in contact with the surface by the weight shown in figure 2, which shall have a total mass of 20 ± 2 g and be supported symmetrically on the pad by its four legs to allow free access of the air to the upper surface of the pad.

9.5.3 Where in the direction of heat flow the specimen is not of uniform material, combination of materials or geometry (e.g. corrugated or coffered ceilings), additional points of measurement shall be included subject to the requirements of **9.5.4** and **9.5.5**, where the temperature is likely to be higher than elsewhere owing to greater conduction of heat through the specimen at those points. These temperatures shall not be used in computing the mean temperature, but shall be taken to determine compliance with the criterion for maximum temperature rise (see **1.5.3**).

9.5.4 No attempt shall be made to fix a thermocouple:

(a) to any component unless full contact can be made between the surface of the component and the entire area of the flat 12 mm copper disc without distortion of the disc or disturbing surrounding material (e.g. insulation) forming the surface of the membrane;

(b) within any gaps in the upper layers of the specimen where the width of the gap at the unexposed surface is less than 12 mm without disturbing surrounding material (e.g. insulation);

(c) over or adjacent to any part of the membrane that constitutes a potential failure in integrity rather than in insulation, i.e. where the thermocouple may be heated directly by the passage of hot gases through the specimen from the furnace.

NOTE. To enable the discs to obtain full contact, the pad covering the disc may be cut away to the minimum extent necessary.

9.5.5 If during a test a thermocouple is known to be heated directly by gases passing through the specimen from the furnace, for example owing to the occurrence of shrinkage cracking or distortion, the readings obtained from it shall not be used for the purpose of determining compliance with the criterion given in **9.6** and the fact shall be reported. If more than two of the thermocouples intended to be used in determining the mean temperature rise are so affected then compliance with the criterion for mean temperature rise shall not be assessed.

Licensed copy:Gravesham Borough Council, 16/03/2006, Uncontrolled Copy, © BSI

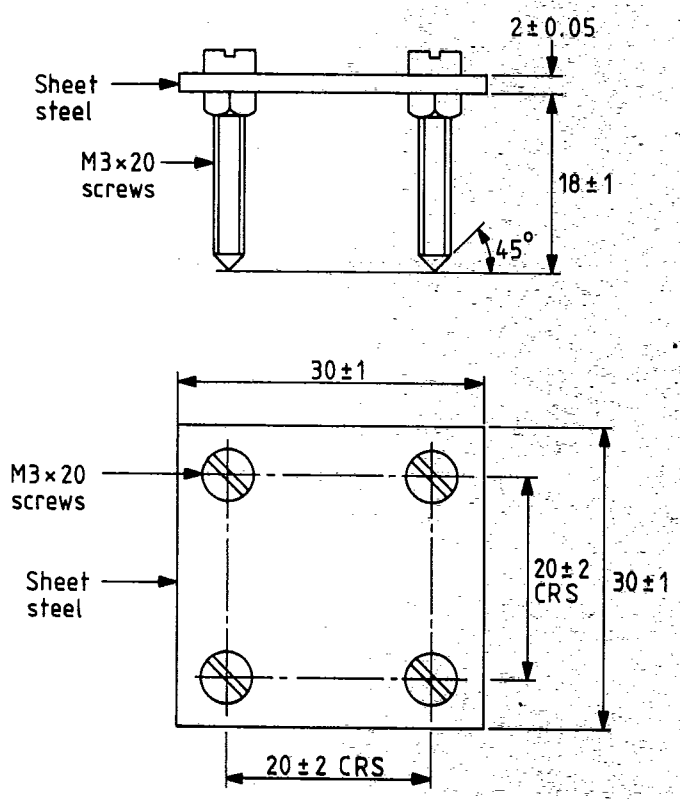

All dimensions are in millimetres

Fig. 2. Thermocouple weight

As added November 1981

9.6 Determination of fire resistance

The performance of the membrane ceiling shall be assessed on the compliance of the specimen with the three criteria specified in **1.5** and its fire resistance shall be determined in accordance with the provisions of **1.6** and ascribed to the tested assembly.

9.7 Test report

The test report shall include the information required in **1.8** together with the following information.

(a) Details of any fittings if incorporated into the specimen.

(b) For a suspended ceiling, details of any provision for expansion in the specimen and other features considered essential for the stability of the system during the test. The expansion allowance per unit length of the grid system and/or the spacing between the provisions for expansion employed, shall be stated.

(c) Which (if any) thermocouple readings were not used, according to **9.5.5** for the purpose of determining compliance with the specified criterion, together with the reasons for this.

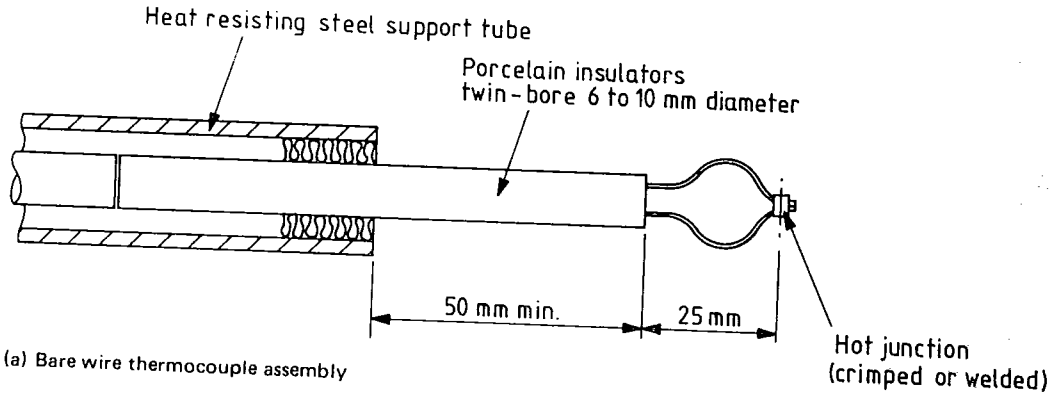

(a) Bare wire thermocouple assembly

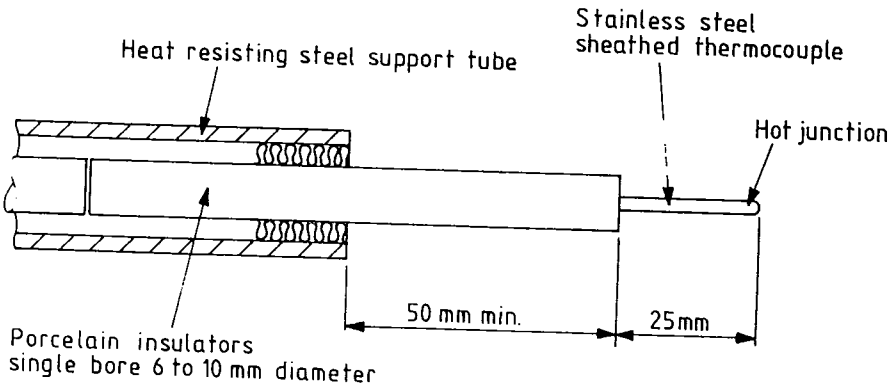

(b) Stainless steel sheathed thermocouple assembly

Fig. 3. Furnace thermocouple assemblies

Licensed copy:Gravesham Borough Council, 16/03/2006, Uncontrolled Copy, © BSI

BSI

Amendment No. 3
published and effective from 31 May 1985
to BS 476 : Part 8 : 1972

Fire tests on building materials and structures
Part 8. Test methods and criteria for the fire resistance of elements of building construction

Revised text

AMD 4822
May 1985

Inside front cover

Delete 'FSB/1' and substitute 'FSM/1'.

AMD 4822
May 1985

Contents

After the entry for figure 2 in the list of figures insert the following:

'3. Furnace thermocouple assemblies'.

AMD 4822
May 1985

Clause 1.4.3 Measurement of furnace temperature

Delete the existing clause and substitute the following:

'**1.4.3 Measurement of furnace temperature.** The temperature shall be measured by furnace thermocouples (see figure 3) symmetrically arranged within the furnace with measuring junctions which shall consist of either:

(1) bare nickel-chromium/nickel-aluminium wires, 0.75 mm to 1.50 mm in diameter, welded or crimped together at their ends and supported and insulated from each other in a twin bore porcelain insulator except that the wires for 25 mm approximately from the weld or the crimp shall be exposed and separated from each other by at least 5 mm; such thermocouples shall be replaced after 6 h exposure or be re-calibrated after every 6 h of use; or

(2) nickel-chromium/nickel-aluminium wire contained within a mineral insulation and in a heat resisting steel sheath of diameter 1.5 mm, the hot junctions being electrically insulated from the sheath. The thermocouple hot junction shall project 25 mm from a porcelain insulator.

Each thermocouple hot junction shall be supported so that it is 100 ± 10 mm from the nearest point of the test specimen at the start of the test. Provision shall be made to maintain the thermocouple hot junction between 50 mm and 150 mm from the face of the specimen during the test should any deflection or distortion of the test specimen take place.

The number of thermocouples shall be as required by relevant clauses dealing with particular elements and they shall be arranged symmetrically within the furnace. The furnace temperature shall be deemed to be the average of the temperatures given by these thermocouples.'

AMD 4822
May 1985

Clause 1.4.6.2 Integrity

Insert the following sentence at the end of the existing text:

'In addition the presence of any sustained flaming, having a duration greater than 10 s, on the unexposed face of the specimen shall be noted.'

AMD 4822
May 1985

Clause 1.5.2 Integrity

Delete the existing clause and substitute the following:

'1.5.2 **Integrity.** Failure shall be deemed to occur when sustained flaming exists for an uninterrupted period of not less than 10 s on the unexposed face of the specimen, or when cracks or other openings exist through which flame or hot gases pass which cause flaming of the cotton wool pad as noted in **1.4.6.2**.'

AMD 4822
May 1985

Clause 3.5 Determination of fire resistance

Delete paragraph 2 and substitute the following:

'The test specimen shall be deemed to have failed the stability requirements of **1.5.1** if it is no longer able to support the test load. For the purposes of this standard this may be taken as either of the following whichever is exceeded first:

(1) a deflection of $L/20$; or

(2) the rate of deflection, R, (in mm/min) calculated over 1 min intervals, on each minute from the commencement of the heating period, exceeds the limit set by the following equation

$$R = \frac{L^2}{9000d}$$

except that this rate of deflection limit shall not apply before a deflection of $L/30$ is exceeded

where L is the clear span of specimen (in mm)

d is the distance from the top of the structural section to the bottom of the design tension zone (in mm).'

AMD 4822
May 1985

Clause 5.5 Determination of fire resistance

Delete the second sentence and substitute the following:

'The test specimen shall be deemed to have failed the stability requirements of **1.5.1** if it is no longer able to support the test load. For the purposes of this standard this may be taken as either of the following whichever is exceeded first:

(1) a deflection of $L/20$; or

(2) the rate of deflection, R, (in mm/min) calculated over 1 min intervals, on each minute from the commencement of the heating period, exceeds the limit set by the following equation

$$R = \frac{L^2}{9000d}$$

except that this rate of deflection limit shall not apply before a deflection of $L/30$ is exceeded

where L is the clear span of specimen (in mm)

d is the distance from the top of the structural section to the bottom of the design tension zone (in mm).'

AMD 4822
May 1985

Clause 6.4 Determination of performance

Delete item (2) and substitute the following:

'(2) with the loaded specimen:

(a) the beams are no longer able to support the test load. For the purposes of this standard this may be taken as either of the following whichever is exceeded first:

(i) a deflection of $L/20$ or

(ii) the rate of deflection, R, (in mm/min) calculated over 1 min intervals, on each minute from the commencement of the heating period, exceeds the limit set by the following equation

$$R = \frac{L^2}{9000d}$$

except that this rate of deflection limit shall not apply before a deflection of $L/30$ is exceeded

where L is the clear span of specimen (in mm)

d is the distance from the top of the structural section to the bottom of the design tension zone (in mm).

(b) the temperature of any beam exceeds a mean value of 550 °C or a maximum value of 650 °C.'

AMD 4822
May 1985

New figure 3. Furnace thermocouple assemblies

Insert the attached figure 3 after figure 2.

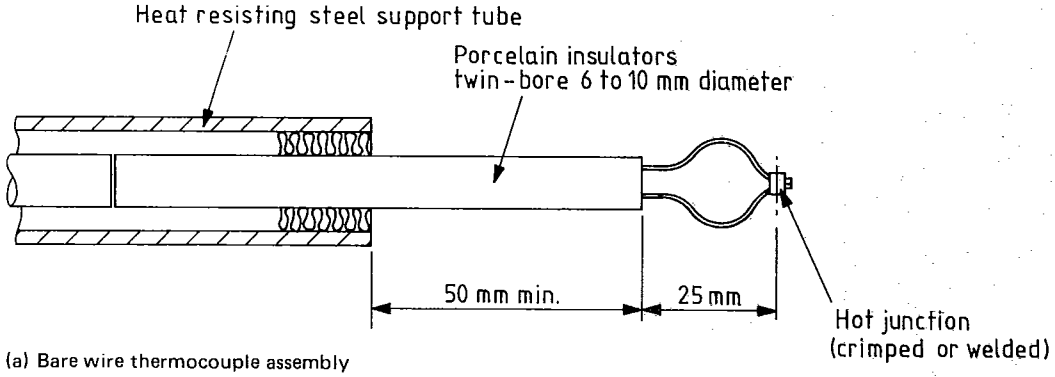

(a) Bare wire thermocouple assembly

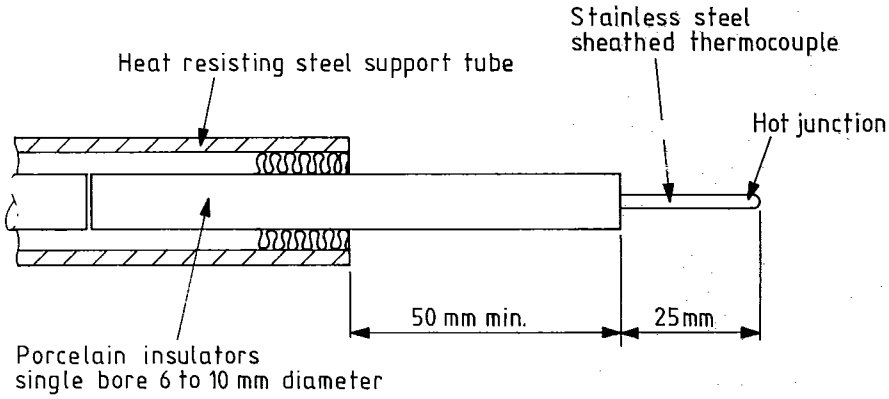

(b) Stainless steel sheathed thermocouple assembly

Fig. 3. Furnace thermocouple assemblies