The FIRE BOOK

Passive fire protection solutions

British Gypsum
SAINT-GOBAIN

The importance of providing effective fire protection to buildings cannot be over-emphasised. The consequences of a fire occurring in a building, without adequate protection, can result in the loss of life, property and serious disruption to business and communities. Fire protection requirements should be identified and designed in at the earliest possible stage since later modifications can be disruptive and costly.

In the search for a building board which maximised the fire protection properties of the gypsum raw material, British Gypsum developed Glasroc F fire protection boards using below the surface glass reinforcement tissue in place of traditional paper liners.

Glasroc F boards are completely non-combustible and offer an excellent surface finish, good impact resistance and moisture tolerance in semi-exposed situations, in addition to superb fire resistance performance.

The boards are split into two distinct ranges, Glasroc F MULTIBOARD for general building and fire protection applications, and Glasroc F FIRECASE which has been specially developed for fire protection of structural steelwork and other high performance applications.

Glasroc F MULTIBOARD is available in thicknesses of 6mm, 10mm and 12.5mm and is used to contribute to the fire resistance of a wide range of building elements including partitions, cavity barriers, ceilings and floors.

Glasroc F FIRECASE is available in thicknesses of 15mm, 20mm, 25mm and 30mm and is used in the **FireCase** frameless encasement system to provide up to 120 minutes fire protection to structural steel beams and columns. Glasroc F FIRECASE can also be used in other high performance applications such as in **FireWall**, a high performance fire resistant wall system providing up to 240 minutes fire resistance, and in mezzanine floor constructions.

This book provides comprehensive information on the excellent fire performance of British Gypsum's Glasroc F specialist board products and explains how they can be specified to meet Building Regulations and insurance requirements. It is an invaluable guide to anyone who is involved in specifying, approving or installing structural fire protection in buildings.

Contents

1 Introduction

British Gypsum 3
General background 4

2 Fire protection theory

Introduction 9
Regulations and guidance 10
Fire protection 12
Behaviour of structural elements in fire 14
Fire resistance testing 16
Reaction to fire 19

3 Glasroc F fire protection solutions

Introduction 23
Glasroc F board products 24
FireCase 25
GypWall CLASSIC 73
FireWall 88
Timber Stud 92
GypWall CURVE 96
GypWall SECURE 99
BlastWall 101
FlameLyner 102
Cavity fire barriers 106
Timber ceiling membranes and compartment floors 110
Steel ceiling membranes and compartment floors 116
CasoLine MF 120

4 Appendices

Fire testing and certification 130
Certification bodies and schemes 133
Useful contacts 135
Glossary of fire terms 137

Manchester Civil Justice Centre, Manchester

1 Introduction

General background

British Gypsum	3
SpecSure® lifetime system warranty	4
Experts in testing and development	5
Site Support	5
Technical Support	5
Sustainability	6
- Sustainable design	6
- Waste management	6
- Plasterboard Recycling Service	6

British Gypsum

British Gypsum is part of the Saint-Gobain group. One of the world's 100 leading industrial corporations. It operates in 50 countries worldwide. Designing, producing and distributing materials for the construction, manufacturing and consumer markets Saint-Gobain is the global leader in building materials.

British Gypsum is therefore able to combine its own century-long experience in local construction methods and practices with the acquired expertise of its sister companies worldwide, and focus this to meet the needs of the UK market. As a result, the company has not only developed the UK's leading range of partition, wall lining, floor, ceiling and encasement systems for buildings as diverse as houses, schools, leisure complexes and high-rise commercial developments, but has acquired a reputation as an innovator and expert in the fields of building acoustics and passive fire protection.

General background

SpecSure®

All of the British Gypsum system solutions listed in this guide are covered by SpecSure®, a lifetime system warranty designed to protect the integrity of drywall system specifications and deliver reliable performance, unrivalled technical support and peace of mind for everyone involved in the construction team.

Unique to British Gypsum, the SpecSure® lifetime system warranty is provided with every British Gypsum proprietary system designed and installed in accordance with the company's recommendations, as specified in the **WHITE** BOOK and associated literature.

SpecSure® is your guarantee that the system you have chosen:

- Comprises only the highest quality components, designed to work individually and in unison to deliver the quoted level of performance
- Has the technical expertise and experience of the UK's leading drywall specialists behind it
- Has been fully tested in the company's UKAS approved fire, acoustic, and structural test laboratories
- Has been site tested to prove installation integrity and simplicity
- Will be supported at every stage by the UK's leading on and off-site technical support personnel
- Will give trouble free performance throughout the life of your building

All you need to do to qualify for the unique SpecSure® lifetime system warranty for your project is to specify and install British Gypsum systems in line with the recommendations contained in the latest edition of the British Gypsum **WHITE** BOOK and associated literature (available to download from www.british-gypsum.com). The systems must comprise only branded British Gypsum components, as we are unable to guarantee that other manufacturers' components will meet our rigorous system performance and quality standards when installed in our tested systems. If you are unsure whether a particular system qualifies for the SpecSure® lifetime system warranty, contact the British Gypsum Drywall Academy on 08705 456123, or email bgtechnical.enquiries@bpb.com

SpecSure® - system performance warranted for life.

British Gypsum SpecSure® systems bring together some of the most respected branded components in the industry.

- Plasterboard products

Developed over more than 90 years, Gyproc plasterboards and accessories lead the market in quality, range and performance – providing proven linings that help British Gypsum systems to meet and surpass the fire, thermal, acoustic, impact and lifetime performance demands of modern buildings.

- Plaster products

Our world-leading range of undercoat and finish plasters are unmatched for quality, consistency and on-the-wall performance. They provide the workability and high quality finish preferred by plasterers throughout the UK.

- Metal components

The range of Gypframe metal studs, channels, angles, brackets and associated components, with their unique UltraSTEEL® manufacturing process, provide the structural backbone for British Gypsum systems.

- Specialist board products

Specialist boards are unique in providing a range of high performance benefits. They also provide the basis for specialist fire, thermal insulation and steel protection systems for a range of buildings.

- Ceiling products

Combining eye-catching design with stunning performance, British Gypsum ceiling tiles, planks and boards bring design back to performance ceilings - providing unique solutions for a range of buildings, from schools to offices and hospitals to residential developments.

- Saint-Gobain Isover insulation products

Isover insulation products provide enhanced thermal and acoustic performance for many British Gypsum systems.

These branded products and components have been developed to work individually and together to deliver the warranted performance for which British Gypsum partition, wall lining, floor, ceiling and encasement systems are renowned.

Experts in testing and development

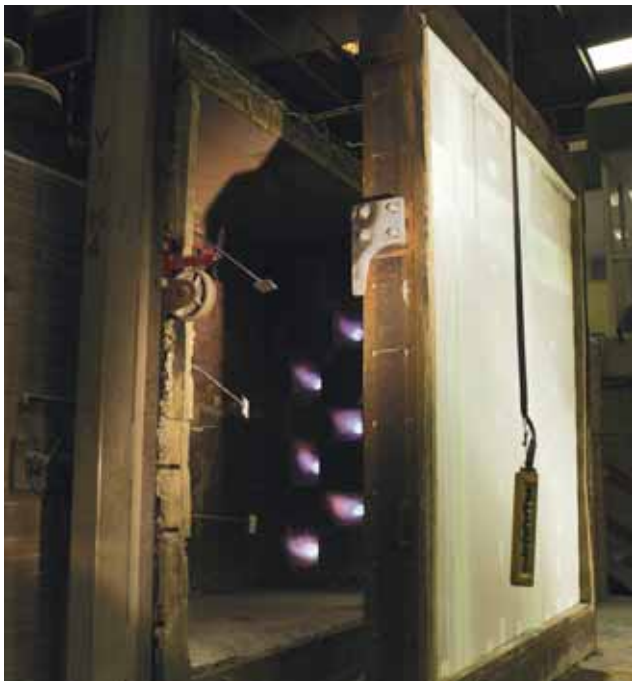

British Gypsum products and systems are tested at the UKAS accredited Building Test Centre - the UK's leading test centre for building products. The Building Test Centre houses comprehensive fire, acoustic and structural test facilities, which have been developed specifically for testing partitions, ceilings and other drywall structures to both British and European test standards. In addition to the quality of the testing facilities, many features of the laboratories, such as the 6-metre fire test furnace, full *BS 5234* duty testing suite, climatic testing suite and wall / floor intersection testing facilities are unique, ensuring that British Gypsum systems are the most comprehensively and accurately tested on the market. It is the confidence of knowing exactly how our systems will perform that enables us to back them with the SpecSure® lifetime system warranty.

Fire performance testing at the Building Test Centre is covered in detail in Section 4.

Site support

As well as comprehensive laboratory testing, we need to be sure that our systems not only perform to standard on site, but meet the installer's needs for speed and simplicity of installation. Testing and proving on site is therefore an integral part of the development process for every British Gypsum system. A close working partnership with the UK's leading specialist trade contractors, housebuilders and major clients, enables us to carry out comprehensive site proving trials on our systems prior to launch. With back-up support from the Building Test Centre's specialist mobile testing teams, we can then be sure that the claimed system performance can be easily achieved in even the most demanding site environments.

Technical support

The British Gypsum Drywall Academy technical and training service provides the most comprehensive support package in the industry. From initial project design and planning right through to site installation and beyond, our specialist teams of technical experts, building technologists, building consultants and training personnel will provide all the support you need – including design advice and detailing, performance calculations, specification clauses and advice or training on system installation. Whether yours is one of the 10,000 calls a month to our technical advice line, or you need on-site support or full off-site training at one of our purpose-built or regional satellite training centres - you'll get back-up all the way from British Gypsum.

Sustainability - Social, Economic, Environmental

Sustainable design
British Gypsum recognises that manufacturing and construction are often perceived to make heavy demands on the environment. We have committed to minimising our impact on valuable natural resources, striving to provide products and systems that enable customers to build in a more sustainable and responsible way.

Sustainable development is about the balance between social, economic and environmental concerns. British Gypsum's approach is to follow these three pillars of sustainability; social, economic and environmental, integrating them into the way we do business.

Environmental sustainability is probably the most recognised aspect of sustainable development and one of the most difficult to manage effectively. We are concerned with protecting and conserving both biodiversity and the environment.

One of the ways we are tackling this is through the management and reduction of waste. British Gypsum has been instrumental in the development of the Ashdown Agreement, delivering a voluntary commitment by UK plasterboard manufacturers to significantly reduce, and ultimately eliminate, plasterboard manufacturing waste to landfill.

Waste management
In developing a waste management strategy, the waste hierarchy framework has become the cornerstone for sustainable waste management, setting out the order in which options for waste management should be considered based on environmental impact.

We are proactively seeking solutions which address the needs of the waste management hierarchy – eliminate, reduce, reuse, recycle and dispose.

Some of the many solutions include:

- Elimination through single board solutions
- Reduction by designing out waste at system development stage
- Recycling, through the Plasterboard Recycling Service.

Plasterboard Recycling Service
As regulation tightens and pressure on landfill sites intensifies, site waste is not only an environmental concern, but can become a major cost to the project.

British Gypsum was the first in the industry to introduce a Plasterboard Recycling Service for major residential and commercial developments in the UK. We have since invested heavily to expand the availability of this unique and very successful service, which not only significantly reduces waste handling costs, but also improves site safety for the contractor through better site housekeeping.

Waste hierarchy process

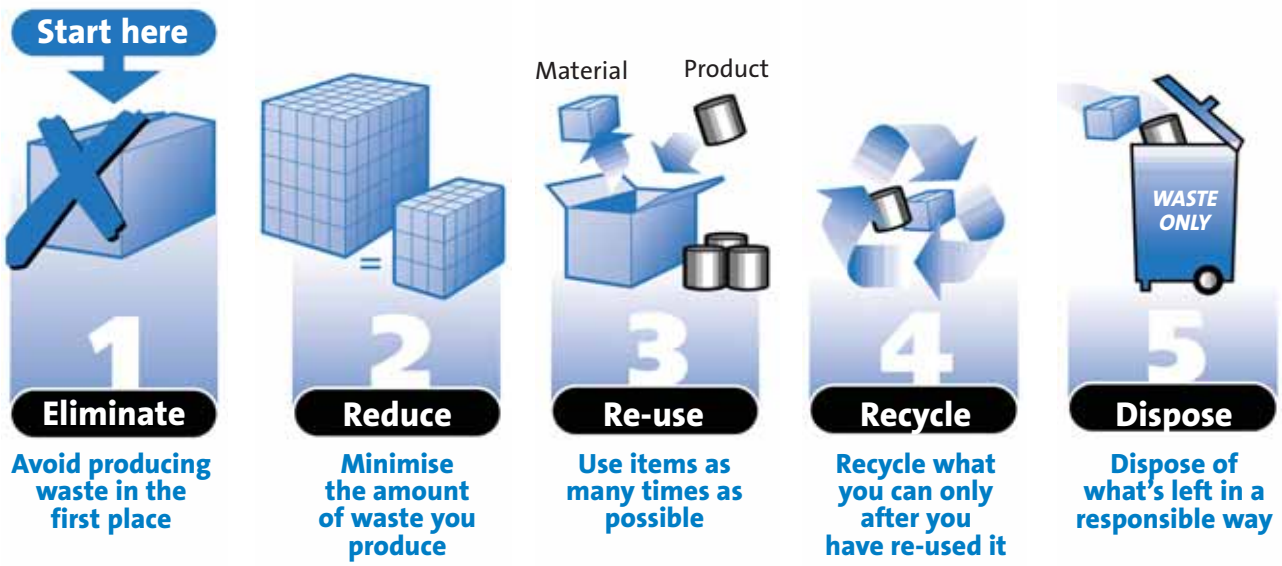

Source: *Environment Agency*

Our Plasterboard Recycling Service offers the collection of all British Gypsum plasterboard, fibreboard, cove, gypsum-based ceiling tiles and glass-reinforced gypsum scrap (including **Glasroc F FIRECASE** and **Glasroc F MULTIBOARD**), direct from site. Following collection, all products are processed and returned to our plasterboard manufacturing plants, helping to save valuable raw materials, therefore offering a truly green recycling service.

For more information, please contact the Plasterboard Recycling Service (PRS) Customer Service Centre on 0800 6335040

Metro Centre, Gateshead

2 Fire protection theory

Regulations and guidance	**10**
Building Regulations Approved Document B	10
Health Technical Memorandum (HTM 05-02 - Healthcare Buildings)	10
Building Bulletin 100 (Educational Buildings)	10
Regulatory Reform (Fire Safety) Order	10
Fire engineering	11
Insurance	11
LPC Design Guide for the Protection of Buildings - Commercial and Industrial	11
ASFP Yellow Book - Fire Protection for Structural Steel in buildings	11
BRE publications	11
SCI publications	11
Fire protection	**12**
Protecting the building structure	12
Structural fire precautions	12
Compartmentation	13
Gaps and service penetrations	13
External fire spread	13
Behaviour of structural elements in fire	**14**
Load ratio	14
Steel - Structural behaviour in fire	14
Guidance for cold-formed steel sections	14
Guidance for cast iron sections	15
Timber - Structural behaviour in fire	15
Fire resistance testing	**16**
British fire resistance test standards	16
European fire resistance test standards	17
Reaction to fire	**19**
Fire growth	19
Reaction to fire test standards	19

Introduction

The information in this section is given as a guide to the general principles of structural fire precautions. Reference should always be made to the relevant legislation, including any amendments and associated documentation.

Regulations and guidance

Building Regulations Approved Document B

Part of a series of Approved Documents that have been approved by the Secretary of State as practical guidance on meeting the requirements of Schedule 1 and Regulation 7 of Building Regulations 2000 (England and Wales). The documents classify the use of a building into purpose groups specifying minimum periods of fire resistance required by the building elements. The periods of fire resistance vary according to the use and the size of the building. The greater the fire hazard a building presents (because of its size and use) then the greater the period of fire resistance required to protect the elements within the building. The materials to be used to form the internal surfaces of the building are also controlled to reduce the risk of fire growth and internal fire spread.

Approved Document B was updated in 2006 and is presented in two separate volumes:

- Volume 1 - 'dwellinghouses'
- Volume 2 - 'buildings other than dwellinghouses'

For Scotland, reference should be made to the Scottish Technical Handbook, Section 2.

Health Technical Memorandum (HTM 05-02 - Healthcare Buildings)

Hospitals and healthcare environments, by their very nature, contain people who are at risk from fire. The recommendations given in HTM 05-02 cover internal fire spread, elements of structure, compartmentation, fire hazard areas, hospital streets, penetrations, protected shafts, ceiling membranes, cavity barriers and fire stopping.

Building Bulletin 100 (Educational Buildings)

Building Bulletin 100 gives guidance of fire safety design covering schools in England and Wales. The guidance applies to nursery schools, primary and secondary schools, sixth form colleges, special schools and pupil referral units.

Figures from the Department for Communities and Local Government (DCLG) show that 1300 school fires a year in England and Wales are attended by local authority Fire and Rescue Services. Around 60% of these are started deliberately. It is necessary to greatly reduce the risk of fires occurring in schools and when a fire does occur, reduce the risk of it spreading. While the primary concern is for the safety of the users of the school buildings, a fire can have a serious impact on children's education due to disruption and loss of work. The important roles that schools play in

the community mean that losses incurred as a result of fire can have real social consequences.

As such, it is particularly important that property protection be considered during the design period and throughout the working life of these buildings.

Regulatory Reform (Fire Safety) Order (RRO)

As of October 2006 new fire safety legislation was introduced that assigns responsibility to the building owner rather than the fire service for the fire safety of the building.

- It is the responsibility of one person to maintain compliance with the RRO. (They will have the duty of care to protect employees, contractors, the public and fire fighters).
- The owner has legal liability for the fire safety of the building and is now required to carry out risk assessments by a competent person.
- The RRO places greater emphasis on fire prevention and risk assessment and recommends:
  - Carrying out a fire risk assessment identifying the risks and hazards
  - Consideration of who may be especially at risk e.g. young people, disabled etc
  - Elimination or reduction of the risk from fire as far as is reasonably practical and provision of general fire precautions to deal with any residual risk
  - Creation of a plan to deal with any emergency and, in most cases, document your findings.
- The RRO applies to virtually all premises (with the exception of domestic residences) and covers nearly every type of building, structure and open space.
- Non-compliance with the RRO can result in prosecution, (either a fine or imprisonment).

Fire engineering

BS 9999 (Code of practice for fire safety in the design, construction and use of buildings) will effectively replace the existing standard *BS 5588* (Fire precautions in the design, construction and use of buildings). It is mainly intended for designers and fire engineers, but may also be of use to specifiers, contractors, owners, safety managers and enforcers.

BS 9999 covers the four main areas:

- Fire safety management
- Provision of means of escape
- Structural protection of escape facilities and the structural stability of the building
- Provision of access and facilities for fire fighting

BS 9999 includes recommendations on the design of means of escape. The main control is now travel time rather than travel distance. The concept of risk profile is also introduced.

Insurance

In addition to life safety it is important that property is considered during the design period. According to the 'Fire Engineers Journal' there were 138 major fires in the UK during 2006 incurring losses totalling more than £135 million. Refer to **Table 1**.

Table 1 - Fires during 2006 incurring losses over £250,000 each

Building use	No. of fires	Estimated insurance payout[1]
Office	7	£23,470,000
Factory	10	£15,044,500
Dwelling	18	£14,404,000
Education	13	£13,134,000
Retail	23	£12,586,274
Warehouse	11	£9,779,762
Food & drink industry	10	£4,210,000

Source: Fire Engineers Journal

[1] *Losses under £250,000 not included in the figures in this table*

According to Building Bulletin 100 - Design for fire safety in schools (2007), a major problem with fires in schools is the scale of the property losses. It is significant and rising each year. Refer to **Table 2**.

The fire insurers objective, in the event of fire, is to ensure that damage to the building, its contents and the extent of business interruption is minimal. This is a quite different objective to that of Building Regulations, so unless this is taken into account a favourable insurance premium may not be obtained for a building.

Table 2 - Insurance losses due to school fires

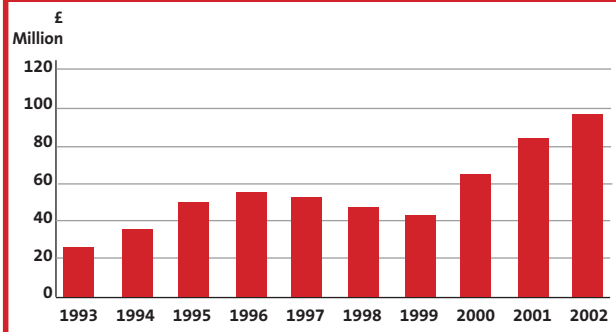

Source: Building Bulletin 100

LPC Design Guide for the Protection of Buildings – Commercial and Industrial

The Loss Prevention Council (LPC) provides guidance on the general principles of passive fire protection - contribution to fire growth, fire resistance, compartmentation and external fire spread. It presents insurers with standards of fire protection for industrial and commercial buildings and is intended to assist building designers and other professional advisors in reconciling the provisions of national legislation standards with the recommendations of the insurance industry. It also gives guidance so that active fire protection measures can be used to augment passive protection.

ASFP Yellow Book - Fire Protection for Structural Steel in Buildings

A publication prepared by the members of the Association for Specialist Fire Protection (ASFP), the Yellow Book presents the theory behind, and methods for, fire protection of structural steelwork to provide compliance with national Building Regulations. It provides a comprehensive guide to proprietary materials and systems all of which are manufactured, marketed or site applied by members of ASFP.

BRE publications

The Building Research Establishment (BRE) produces a range of technical and information papers, text books and reference books including BRE digests and BRE Good Building Guides.

SCI publications

The Steel Construction Institute (SCI) produces a range of publications covering design methods, new and innovative concepts, codes and standards.

Fire protection

Protecting the building structure

The consequences of a fire occurring in a building can lead to serious loss of life and property. In addition, the disruption to business activity can result in the loss of vital customers and orders. It is therefore essential that adequate consideration is given to fire safety requirements and the provision of fire protection measures.

In order to safeguard life and property, it is important that the correct level of fire resistance is incorporated in the overall design of buildings. Individual elements of construction should be specified so as to minimise contribution to fire growth.

Compartmentation needs to be considered to reduce the risk of a fire spreading. Also, the provision of fire resisting external construction or sprinkler protection may be required to limit external fire spread.

It is essential that fire protection is correctly installed within the building. The effectiveness of fire protection measures can be significantly impaired by substitution of materials, deviation from the recommended fixing methods or poor workmanship/supervision.

Fire protection includes both 'passive' and 'active' provision. Passive measures are generally built-in to the structure, such that the building can withstand a fire for the design period. Their purpose is to protect the structure and the lives of persons inside in the event of a fire, by reducing or preventing internal and external fire spread, maintaining the stability of the building and the safety and escape routes for the occupants.

Passive provision includes compartmentation and structural fire protection, the provision of good access to buildings for firefighting personnel, and the provision and protection of safe and effective means of escape.

Active measures are designed to operate when a fire breaks out, and include the provision of detection and alarm systems, automatic sprinklers, fusible link doors and shutters, emergency lighting and smoke ventilation systems.

NB The information given in this book relates specifically to passive fire protection systems, which are designed primarily to contain or reduce fire spread both within a building and to adjacent and adjoining buildings.

Structural fire precautions

Structural fire precautions, as required by national Building Regulations, ensure that, for a reasonable period in the event of fire, the stability of a building is maintained and the spread of fire and smoke within a building and the spread of fire to and from other buildings is inhibited, allowing safe evacuation and fire fighting.

Spread of fire within a building occurs as a result of fire exploiting any existing weaknesses or by burning through or conducting heat through the construction. Fire, smoke and hot gases can also spread throughout a building by various routes such as stairways, lifts, escalators, corridors, chutes, ducts and other cavities. Refer to **Figure 1**.

The choice of building materials and how they are used to provide the required level of passive fire control depends on two factors - their 'reaction to fire' and their 'fire resistance'.

Reaction to fire performance is a measure of the extent to which internal surfaces will contribute to the spread of flame. The main aim is to ensure that fire will not spread with dangerous rapidity over wall or ceiling surfaces, particularly in circulation spaces.

The fire resistance requirements for individual building elements relate to integrity and insulation. For loadbearing elements there is the additional requirement of loadbearing capacity. In essence, the aim is to restrict the spread of fire from one space to another and prevent collapse. It is important that only those elements shown by fire testing to meet the specified level of fire protection are used. It is particularly important that any construction used to protect escape and fire access routes has the necessary fire resistance.

1 Spread of fire within a building

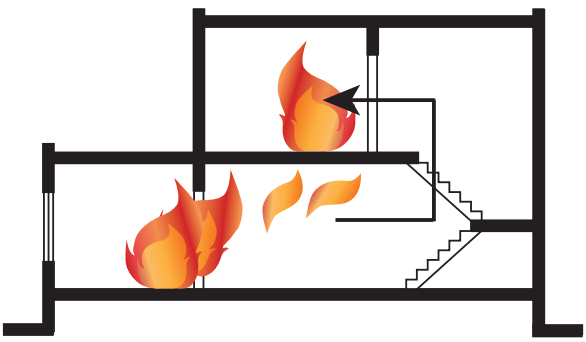

Compartmentation

Compartmentation helps to prevent rapid fire spread within a building and/or to an adjoining building. By reducing the risk of a fire spreading, this helps the occupants evacuate and the fire service fight the fire, and limits disruption to business activities. The amount of compartmentation will vary according to the size and occupancy of the building. The need and degree of subdivision will depend on an assessment of factors such as life safety, complexity of building, values at risk, anticipated fire brigade response and the extent of disruption of trading activity. The assessment may indicate that compartmentation measures need to be specified which are in excess of Building Regulation requirements.

Compartments in the form of cavity barriers may be required to inhibit the spread of flame and smoke within horizontal and vertical sealed spaces.

2 Compartmentation

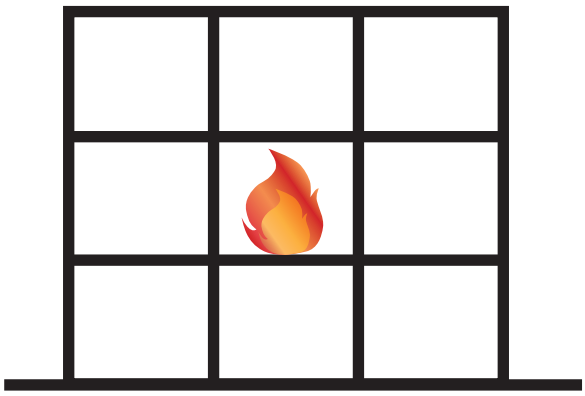

Gaps and service penetrations

Services should be formulated and constructed to minimise the contribution to fire growth or be protected from a fire condition. In most cases, building elements are imperforate when tested for fire resistance. However, in practice service routings and penetrations need to be accommodated. The suitability of building services, such as pipes or ducts, which pass through fire resistant constructions, need to be given serious consideration. Gaps and imperfections of fit will also need to be properly fire-stopped.

External fire spread

The outer fabric of a building can be affected by fire. Fire spreads from one building to another by flames spreading up the external face of the building or from one part of a building to another by means of radiation, flying burning brands or flames projecting across the space separation.

The design of an external wall has to take into account the requirements for fire resistance, resistance to spread of fire over the external surface and the amount of unprotected area of wall. The amount of unprotected area that is permitted depends on the distance between the wall and the boundary.

3 External fire spread

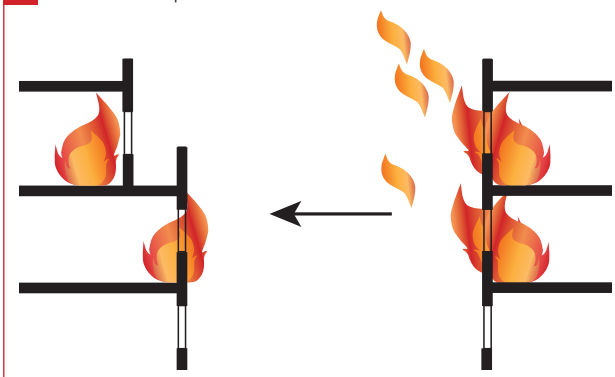

The roof of a building must also protect against the risk of fire spread. Requirements for the roof covering depend on the proximity to the boundary, the size, and the use of the building.

Behaviour of structural elements in fire

Load ratio

In structural design terms, fire is considered to be an accidental limit state, i.e. an accidental occurrence, and one for which the structure must not collapse. Loads (and their factors of safety) used in design at the fire limit state reflect the low probability of occurrence.

Many structural members are over-designed under normal conditions and, therefore, the proportion of their load carrying capacity that is utilised at the fire limit state is significantly less than 50%. This parameter is known as the 'load ratio'.

$$\text{Load ratio} = \frac{Lfl}{Ln}$$

Where :
Lfl = load on member
Ln = load carrying capacity of member

Typically, structural members that are designed to be fully stressed under normal conditions would be subject to a load ratio of 50% to 60% under fire conditions. Within this book loadbearing constructions are quoted with respect to a stated load ratio. Many constructions have been tested at a load ratio of 100%, which is a very conservative approach. It is, however, a load ratio used by some designers despite the fire state being an accidental load.

Steel - Structural behaviour in fire

All types of steel lose strength at temperatures above 300°C and eventually melt at about 1500°C. Importantly for design, the greatest rate of strength loss is in the range of 400°C to 600°C.

Using fire design codes such as *BS 5950-8* or the Structural Eurocodes *EC 3-1.2* and *EC 4-1.2* (designated *ENV 1993-1.2* and *ENV 1994-1.2*), the load on the structure at the time of the fire can be calculated by treating it as an accidental limit state. If used, this will allow designers to specify to the fire protection contractor a limiting or failure temperature for a given structural section. The fire protection contractor will then be able to use the required thickness of material to ensure that the steel section does not exceed this temperature within the fire resistance period. This process could be simplified by the designer specifying a maximum steel temperature, based on worst case, for all beams or columns on one floor level.

Buildings which are not used for storage e.g. offices, residential units, schools and hospitals, have a high percentage of non-permanent loads. For this type of building, the structural codes *BS 5950-1* and *ENV 1991-1-1* assume that a proportion of the design load will not be present at the time of the fire. Other types of buildings such as warehouses and libraries are primarily used for storage, so a high percentage of the load is permanent, and the codes allow no reduction in design load for the fire condition.

Columns are frequently constructed so that a single length will be two or three storeys high. The lowest storey will be loaded the highest and the upper storey will be lightly loaded. Another factor affecting the failure temperature in fire is that there are only a finite number of steel serial sizes. The designer is often forced to use 'the next size up'. Steel members which, in terms of strength, are not fully utilised in the normal cold state will have reduced load ratios in the fire limit state.

In buildings with a degree of non-permanent load (in terms of duration and magnitude), the load ratio of the structural members is very unlikely to be greater than 0.6. In storage buildings, where the majority of load is permanent, the load ratio would normally be higher but, in any case, is very unlikely to be greater than 0.65.

In Section 3 – FireCase encasement system, the thicknesses of protection required are specified for design temperatures of 550°C. It is the responsibility of the design engineer, using design codes such as *BS 5950-8* or *ENV 1993-1-2*, to specify the appropriate limiting steel temperatures.

Guidance for cold-formed steel sections

The loss of strength of cold-formed steel at elevated temperatures exceeds that of hot rolled steel by between 10% and 20%. Expert advice should be sought in determining the strength reduction factor at the limiting temperature. Refer to the Steel Construction Institute website at www.steel-sci.org for more information.

Guidance for cast iron sections

Whilst there is some guidance within the industry (e.g. Building Legislation and Historic Buildings by English Heritage, Appraisal of Existing Iron and Steel Structures by Steel Construction Institute (SCI) there is currently no definitive recognised method of assessing or testing the fire performance of cast iron columns and beams with applied fire protection.

It is generally recognised that good quality structural cast iron could significantly lose its strength when exposed to a temperature between 300 to 400°C. However, it is also generally recognised that structural cast iron is not always of good quality and typical defects include trapped air and variable thickness making them prone to cracking or shattering, particularly when exposed to cold water. In this situation active measures, such as sprinklers, are not necessarily a suitable fire protection solution. Cast iron is weak in tension and therefore cast iron beams are often strengthened using structural timber. Removal of timber strengthening from the beam could result in collapse.

We are unable to offer advice on the quality/structural performance of in-situ cast iron columns and beams. This judgment must be made by a 'suitably qualified person' (e.g. structural engineer).

Timber - Structural behaviour in fire

Timber joists after a fire test

Timber has a low thermal expansion, which minimises the possibility of charred material or other protective layers becoming displaced. It also has a low thermal conductivity, which means that undamaged timber immediately below the charred layer retains its strength. Generally, it may be assumed that timber will char at a constant rate when subjected to the standard heating conditions of the test furnace. The rate of reduction in the size of structural timber can be taken as 15mm to 25mm (depending on species) in thirty minutes for each face exposed. Different rates apply where all faces are exposed.

The undamaged timber can be assessed for structural stability using standard design guides in conjunction with stress modification factors. For partitions tested with high load ratios it should be noted that when the timber is exposed to fire, the exposed face will shrink causing differential thermal movement. This bow can be important for axially loaded sections as it introduces a degree of eccentricity which may cause a loss of loadbearing capacity.

Fire resistance testing

British fire resistance test standards

National Building Regulations and associated documentation require elements of structure and other building elements to provide minimum periods of fire resistance, expressed in minutes, which are generally based on the occupancy and size of the building.

Fire resistance is defined in *BS 476: Part 20: 1987* as 'the ability of an element of building construction to withstand exposure to a standard temperature / time and pressure regime without loss of its fire separating function or loadbearing function or both for a given time'.

BS 476: Part 20: 1987
Describes the general procedures and equipment required to determine the fire resistance of elements of construction.

BS 476: Part 21: 1987
Describes the specific equipment and procedures for determining the fire resistance of loadbearing elements.

BS 476: Part 22: 1987
Describes the procedures for determining the fire resistance of non-loadbearing elements.

BS 476: Part 23: 1987
Describes the specific equipment and procedures for determining the contribution made by components to the fire resistance of structures.

Loadbearing capacity
A loadbearing element must support its test load. For floors, flat roofs and beams, allowable vertical deflection is limited to 1/20th of the clear span.

Loadbearing capacity failure

Integrity
A separating element must resist collapse, the occurrence of holes, gaps or fissures through which flames and hot gases could pass and sustained flaming on the unexposed face.

Integrity failure

Insulation
A separating element must restrict the temperature rise of the unexposed face to below specified levels (maximum temperature rise of 180°C or average temperature rise on the standard five thermocouples of 140°C).

European fire resistance test standards

The Construction Products Directive (CPD) within European legislation is designed to enable free trade across Europe in construction products. To enable free trade, harmonised test standards for technical performance are required. The area of technical performance most affected by this requirement is fire performance. This can be split into two main parameters - reaction to fire and fire resistance.

Both reaction to fire and fire resistance are measured differently across Europe. New EN test standards were therefore required in order to achieve technical harmonisation. For reaction to fire, new test methods were devised and a new Euroclass classification system introduced. For fire resistance the methods used across Europe were similar but the severity of furnaces varied due to factors such as different fuel sources and furnace geometry. To increase consistency between furnaces, a new temperature measuring device was introduced - the 'plate thermometer'. The plate is designed to measure the heat flux to which samples are exposed and consequently equalise the test furnaces.

For the UK, the introduction of the plate means that our furnaces have become more severe, especially during the first thirty minutes of exposure. Refer to **Figure 4** - Comparison of the BS and EN furnace curves, which shows the increased temperature measured with a BS thermocouple when a furnace is controlled utilising the EN plate thermometer. This increase in severity is not in itself a problem if national Building Regulations were to be altered to reflect this. The regulations, however, have adopted the new test method but the periods of fire resistance have remained constant. In effect the level of fire safety has been raised in the UK by the adoption of EN test standards within national Building Regulations.

The EN test methods will be introduced gradually. However, a supplement to the national Building Regulations was published in December 2002 and from this date the EN and BS testing systems have run in parallel so that designers can use BS or EN test data.

British Gypsum has retested the majority of its systems and, where necessary, redesigned systems in order to present test information conducted in accordance with new EN fire test standards.

4 Comparison of the BS and EN furnace curves

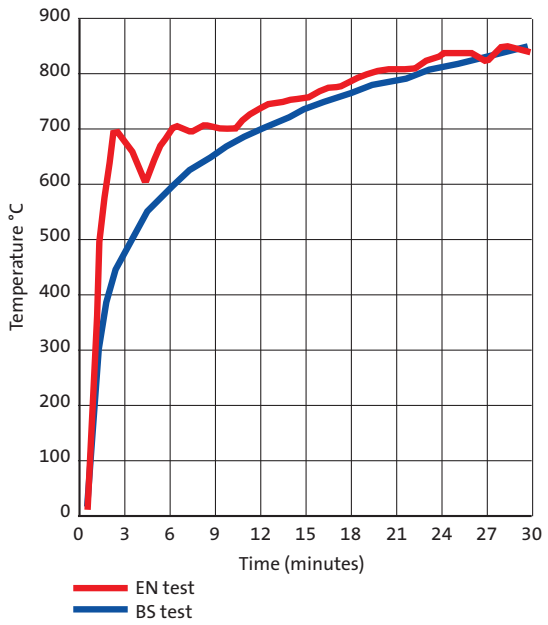

Field of application

6m high fire test

6m high fire test integrity failure

In addition to the severity of the new EN fire resistance tests, the test standard also imposes strict rules governing the use of tests to cover specific end use scenarios (field of application). This restricted field of application has most effect on partition heights where partitions built at heights above 4m may need to have enhanced levels of fire resistance. With the *BS 476: Part 22* testing regime the partition height in the fire state was simply not considered and if a partition passed the fire test at 3m it was deemed to be suitable in fire resistance terms for any possible end use scenario. Under the BS system, the cold state height would be the maximum height claimed regardless of the fire duration required. The more sophisticated EN test standard considers partition height and fire resistance performance in the end use condition, ensuring a greater level of fire safety.

Within the field of application section of *BS EN 1364 - 1: 1999* there is a limitation on the height that can be claimed for a partition based on a given test. To claim up to 3m the partition simply has to be tested at a height of 3m in the fire resistance test. To claim up to 4m the partition has to pass the test with a partition test height of 3m and deflect by not more than 100mm laterally during the test. To claim above 4m the partition has to undergo an engineering appraisal where the thermal bow and strength loss of the steel studs is taken into account. An engineering method for establishing the fire height of partitions is available in the EOTA (European Organisations for Technical Approvals) guidelines appropriate for non-loadbearing partitions - ETAG 003.

The only alternative to using an engineering appraisal is to conduct a test at the height under consideration. British Gypsum has conducted an extensive series of tests on partitions with heights up to 6m.

The EN fire resistance periods claimed for systems in this book are evaluated in accordance with the relevant EN test standards. These systems are based on the appropriate direct or extended field of application.

BS EN 1363-1: 1999
Fire resistance tests – Part 1: General requirements

BS EN 1364-1: 1999
Fire resistance tests for non-loadbearing elements – Part 1: Walls

BS EN 1364-2: 1999
Fire resistance tests for non-loadbearing elements – Part 2: Ceilings

BS EN 1365-1: 1999
Fire resistance tests for loadbearing elements – Part 1: Walls

BS EN 1365-2: 1999
Fire resistance tests for loadbearing elements – Part 2: Floors and roofs

ENV 13381-1
Contribution to fire resistance of structural members – Part 1: Membrane protection - horizontal

ENV 13381-4
Contribution to fire resistance of structural members – Part 4: Steel elements

Reaction to fire

Fire growth

The choice of materials for walls and ceilings can significantly affect the spread of fire and its rate of growth, even though they are not likely to be the materials first ignited. The specification of linings is particularly important in circulation spaces where surfaces may offer the main means by which fire spreads and where rapid spread is most likely to prevent occupants from escaping. Two properties of lining materials that influence fire spread are the rate of flame spread over the surface when it is subject to intense radiant heating, and the rate at which the lining material gives off heat when burning. Approved Document B of the Building Regulations (England and Wales), gives guidance on the class of surface required for different activity areas.

Reaction to fire test standards

Reaction to fire tests can be performed to the following standards:

BS 476: Part 4: 1970 (1984)
Non-combustibility test for materials

BS 476: Part 6: 1989
Methods of test for fire propagation for fire products

BS 476: Part 7: 1997
Surface spread of flame tests for materials

BS 476: Part 11: 1982
Method of assessing the heat emission from building materials

Non-combustibility test

Surface spread of flame

Non-combustibility
In order to help provide maximum fire safety in buildings, certain building elements need to be constructed of non-combustible materials. A building material is designated non-combustible if it satisfies performance criteria when tested in accordance with:

BS 476: Part 4: 1970 (1984)
Non-combustibility test for materials

BS 476: Part 11: 1982 (1988)
Method for assessing the heat emission from building materials

Glasroc F FIRECASE and Glasroc F MULTIBOARD are designated non-combustible.

Materials of limited combustibility

- Any non-combustible material (listed in Building Regulations Approved Document B, Table A6).
- Any material of density 300kg/m^3 or more, which when tested to *BS 476: Part 11: 1982*, does not flame and the rise in temperature on the furnace thermocouple is not more than 20°C (less onerous performance criteria are referred to for materials having a density less than 300kg/m^3).
- Any material with a non-combustible core at least 8mm thick having combustible facings (on one or both sides) not more than 0.5mm thick. Where a flame spread rating is specified, these materials must also meet the appropriate test requirements. Gyproc and Glasroc F boards are all designated materials of limited combustibility.

Surface spread of flame
The spread of flames over wall and ceiling surfaces can be controlled by using materials which are either non-combustible or materials of limited combustibility. Combustible materials (or certain materials of limited combustibility which are composite products) are tested to:

BS 476: Part 7: 1997[1]
Surface spread of flame tests for materials,
or
BS 476: Part 7: 1987[1]
Method for the classification of the surface spread of flame of products

[1] *The 1987 version has been superceded by the 1997 version, however, the 1987 version is still cited in Building Regulations.*

Materials are classified Class 1, 2, 3 or 4. Class 1 provides the greatest resistance to surface spread of flame. The Building Regulations, by means of associated documentation, control flame spread over wall and ceiling surfaces and surfaces in other situations. The exposed surfaces of Gyproc and Glasroc F boards, and Thistle plasters are all designated Class 1.

Fire propagation
Investigations concerned with the growth of fires in buildings show that the surface spread of flame test does not measure all the properties relevant for placing combustible materials in the proper order of hazard. Such considerations led to the test described in:
BS 476: Part 6: 1989
Method of test for fire propagation for products

This test takes into account the amount and rate of heat evolved by a specimen whilst subjected to a specified heating regime in a small furnace. The British Standard describes the method of computing the results in order to obtain indices of performance. These indices help to determine the suitability of combustible wall and ceiling lining materials when used in areas requiring maximum safety.

Class 0
In addition to the degree to which combustible materials used as wall and ceiling linings can contribute to the spread of flame over their surfaces, consideration must also be given to the amount and rate of heat evolved by these materials when used in areas requiring maximum safety. The Building Regulations, by means of associated documentation, make provisions that wall and ceiling surfaces must be Class 0 in circulation spaces (which are often escape routes) and in other specific situations.

In Approved Document B, a material or the surface of a composite product is either:

- Composed throughout of materials of limited combustibility (this term includes non-combustible materials).
- A Class 1 material which has a fire propagation index (I) of not more than 12 and a sub-index (i1) of not more than 6. This performance also applies to composite products which are defined as materials of limited combustibility.

Although Class 0 is the highest performance classification for lining materials, it is not a classification identified in any British Standard.

Single burning item test

European reaction to fire test standards
The European Classification System (Euroclass), devised for the classification of reaction to fire, has been introduced as part of the ongoing harmonisation of European standards. Reaction to fire has traditionally been assessed using at least 30 different national standards across Europe. Not only is the Euroclass system new, but it includes new tests designed to better evaluate the reaction of building products to fire.

Euroclasses predict the performance of building materials in a real fire more accurately than the old British Standard classification system. Gypsum products have inherent fire protection properties and generally fall into the higher Euroclass classifications.

The Euroclass test methodology is built around the Single Burning Item (SBI) test method, which is an intermediate scale test to evaluate the rate of fire growth from a waste paper basket fire positioned in the corner of a room. Other tests used in the classification system are the non-combustibility test, bomb calorimeter and direct flame impingement test.

Plasterboard is subject to a 'classification without further test' decision. Essentially this means that any type of plasterboard is classified as A2 so long as the paper grammage of the liner does not exceed 220g per m^2. Any plasterboard product that has a paper liner in excess of this grammage is required to be tested. Classification A2 is the safest but one Euroclass category (Refer to **Table 3**). **Glasroc F FIRECASE** and **Glasroc F MULTIBOARD are Classified A1 (non-combustible) and achieve a Class 0 reaction to fire rating in accordance with Approved Document B**.

Approved Document B of the Building Regulations (England and Wales) was amended in 2002 to allow the Euroclass classification system to be used for demonstrating compliance. **Table 3** gives the Building Regulation Approved Document B requirements and the equivalent Euroclass category.

BS EN ISO 1182: 2002
Reaction to fire tests for building products – Non-combustibility test

BS EN ISO 1716: 2002
Reaction to fire tests for building products – Determination of the heat of combustion

BS EN 13823: 2002
Reaction to fire tests for building products – Building products excluding floorings exposed to the thermal attack by a single burning item

BS EN ISO 11925-2: 2002
Reaction to fire tests for building products – Ignitability of building products subjected to direct impingement of flame. Single flame source test

Table 3 - Euroclass categories

National classification	Category	Safety level	*BS EN ISO 13501-1: 2007* Test requirements
Non-combustible	A1		*BS EN ISO 1182: 2002* and *BS EN ISO 1716: 2002*
Material of limited combustibility	A2		*BS EN ISO 1182: 2002* or *BS EN ISO 1716: 2002* and *BS EN ISO 13823: 2002*
Class 0	B		*BS EN ISO 13823: 2002* and *BS EN ISO 11925-2: 2002*
Class 1	C	decreasing fire safety	*BS EN ISO 13823: 2002* and *BS EN ISO 11925-2: 2002*
Class 3	D		*BS EN ISO 13823: 2002* and *BS EN ISO 11925-2: 2002*
	E		
	F		

NB **Table 3** below is for guidance only. The national classifications do not automatically equate with the classification given in the Euroclass column. Products cannot automatically assume a Euroclass unless they have been tested accordingly or are subject to a 'classification without further test' decision.

The Lowry Centre, Salford

3 Glasroc F fire protection solutions

Glasroc F board products	24
FireCase	25
GypWall CLASSIC	73
FireWall	88
Timber stud	92
GypWall CURVE	96
GypWall SECURE	99
BlastWall	101
FlameLyner	102
Cavity fire barriers	106
Timber ceiling membranes and compartment floors	110
Steel ceiling membranes and compartment floors	116
CasoLine MF	120

Introduction

Glasroc F FIRECASE and Glasroc F MULTIBOARD are glass reinforced gypsum (GRG) boards containing glass tissue immediately below the surface of the board and glass fibre rovings in the core.

Glasroc F FIRECASE and Glasroc F MULTIBOARD are both non-combustible and can provide high levels of fire resistance in addition to an excellent surface finish, good impact resistance and moisture tolerance in semi-exposed situations.

Glasroc F MULTIBOARD is available in thicknesses of 6mm, 10mm and 12.5mm and is used to contribute to the fire resistance of a wide range of building elements including partitions, cavity barriers, ceilings and floors.

Glasroc F FIRECASE is available in thicknesses of 15mm, 20mm, 25mm and 30mm and is used in the **FireCase** frameless encasement system to provide up to 120 minutes fire protection to structural steel beams and columns. Glasroc F FIRECASE can also be used in other high performance applications such as in **FireWall**, a high performance fire resistant wall system providing up to 240 minutes fire resistance, and in mezzanine floor constructions.

Glasroc F board products

Glasroc F physical properties

Why is Glasroc F so good in fire?

Glass fibres within the core of a Glasroc board

Glasroc F provides good fire protection in buildings due to the unique behaviour of its gypsum core when exposed to fire. Pure gypsum ($CaSO_4.2H_2O$) contains nearly 21% chemically combined water of crystallisation, and about 79% calcium sulphate ($CaSO_4$), which is inert below a temperature of 1200°C. When Glasroc F protected building elements are exposed to fire, the chemically combined water is gradually released in the form of water vapour. If a sufficiently high temperature is maintained, eventually all the water of crystallisation will be expelled. The process of dehydrating gypsum by heat is known as 'calcination'. This condition is caused in general use if the board or gypsum finish is continuously exposed to temperatures over 49°C. It commences at the surface exposed to the fire and proceeds gradually through the board thickness. The covering of calcined gypsum formed on the exposed faces adheres tenaciously to the uncalcined material and serves to retard the calcination process, which becomes progressively slower as the thickness of calcined material increases. While the process continues, the temperature directly behind the plane of calcination is only slightly higher than that of boiling water (100°C). Therefore, until all the water of crystallisation has been liberated, the temperature of materials adjacent to, or in contact with, the unexposed side cannot exceed 100°C. This temperature is well below that at which most materials used in buildings will ignite and far below the critical temperatures for structural components. Once the gypsum layer is completely calcined, the residue (calcium sulphate) continues to act as an insulating layer for as long as it remains intact.

Refer to **Figure 1** - Temperature profile on the unexposed face of a Glasroc F lined partition system. The graph shows that there is a large plateau in the temperature rise which is the period of time when the Glasroc F board is undergoing calcination. After this period the temperature gradually rises until the boards lose their integrity and fall away.

1 Temperature profile on the unexposed face of a Glasroc F lined partition system

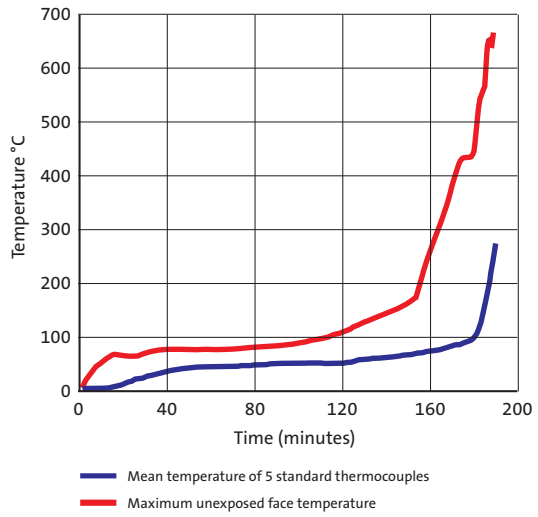

The inclusion of the glass fibre tissue and rovings within the gypsum core of Glasroc F FIRECASE and Glasroc F MULTIBOARD improves the cohesive properties and fire integrity performance. This enables a much higher fire protection performance to be achieved compared to standard plasterboard.

In terms of reaction to fire, Glasroc F FIRECASE and Glasroc F MULTIBOARD are excellent performers as the endothermic hydration reaction requires energy to be taken from the fire, so in calorific terms gypsum is a negative contributor. Glasroc F FIRECASE and Glasroc F MULTIBOARD are non-combustible due to not having a paper lining on the face of the board.

FireCase - Frameless structural steel encasement system

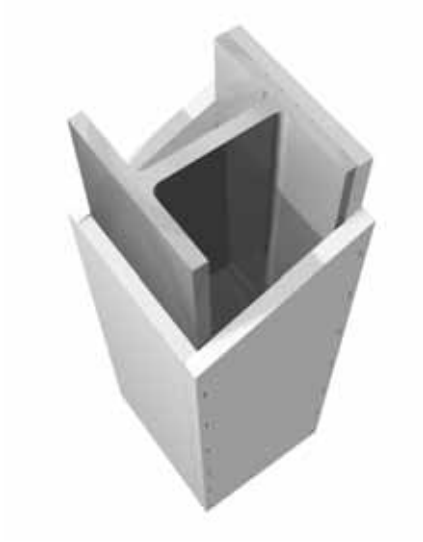

FireCase frameless encasement system provides a high quality cladding to structural steel, and offers up to 120[1] minutes fire protection. The system provides protection to universal steel columns and beams, together with many joist and castellated beam sections. It can be used in any type of building where an encasement is required to structural steelwork. The Glasroc F FIRECASE lining provides a smooth, robust surface and there is no requirement to joint or apply a decorative treatment.

Key benefits

- High levels of fire protection to structural steelwork
- Non-combustible system
- Board manufactured to tight thickness tolerances to ensure the correct level of fire protection
- Maintains compartmentation
- Benefits acoustic performance
- No finishing required to achieve the fire performance
- Simple and quick to install
- Can be installed early in the build programme
- No costly steel preparation required
- Installation is not affected by temperature
- Option of staple fixing for faster installation
- Minimal impact to other trades on site
- Glasroc F FIRECASE provides a smooth, impact resistant surface
- Fully compatible with drylining and provides flexibility for future change of use
- Provides spatial efficiencies
- Is easy to maintain and repair
- Covered by British Gypsum's SpecSure® lifetime system warranty
- Glasroc F FIRECASE can be recycled using the British Gypsum Plasterboard Recycling Service
- Has third party certification

[1] Up to 180 minutes fire protection to columns can be achieved using Glasroc F FIRECASE boards in conjunction with the GypLyner ENCASE system.

Smooth, impact-resistant surface

The Glasroc F FIRECASE board lining provides a smooth, robust surface and there is no requirement to joint or apply a decorative treatment. The **FireCase** frameless encasement system can be finished if required, to blend seamlessly with other British Gypsum systems.

Non-combustibility

The surfaces of the Glasroc F FIRECASE board are non-combustible and are designated Class 0 (for the purposes of Building Regulations).

Thickness of applied fire protection

Glasroc F FIRECASE is manufactured to stringent factory tolerances, giving the client peace of mind that the correct thickness of fire protection has been applied, ensuring life safety in the event of a fire.

Benefits to compartmentation

Using the **FireCase** frameless encasement system will eliminate any potential problems with compartmentation. Unlike some alternative fire protection technologies, e.g. paint, using the **FireCase** frameless encasement system will ensure that there are no potential problems with insulation failure through the steelwork (refer to **Figure 1 - Benefits to compartmentation**).

Flexibility for future change of use

The **FireCase** frameless encasement system is fully compatible with other British Gypsum systems and supports flexibility during changes to building use. British Gypsum partition systems can be directly fixed to the Glasroc F FIRECASE board linings allowing changes to be made without compromising the structural fire protection. Refer to **Construction details 6** and **8** later in this section.

1 Benefits to compartmentation

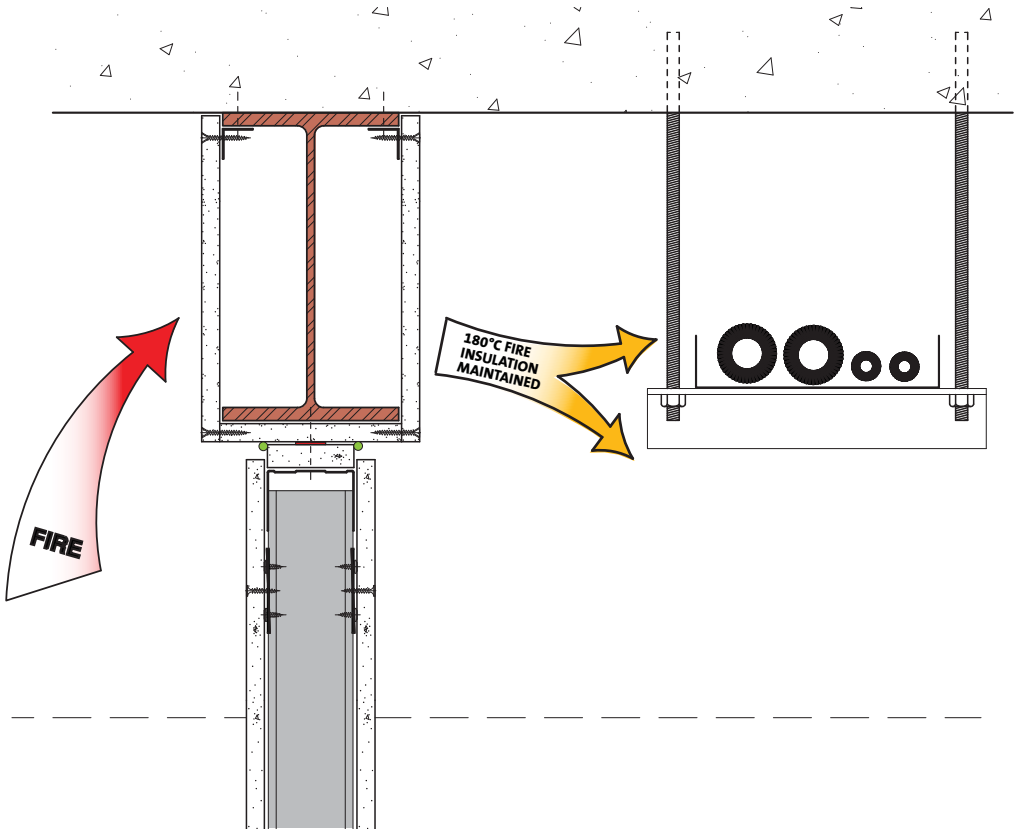

Benefits to acoustics

The **FireCase** frameless encasement system will also give acoustic benefits in terms of preventing sound transmission through the building structure due to the steelwork not being exposed. The **FireCase** frameless encasement system can be used in conjunction with Gyproc plasterboards, and Isover APR 1200 mineral wool can be added to the cavity to further enhance the acoustic performance. Specific details are available from the British Gypsum Drywall Academy. Unlike some alternative fire protection technologies, e.g. paint, using the **FireCase** frameless encasement system will greatly improve the acoustic performance of a structure (refer to **Figure 2 - Benefits to acoustics**).

All year round installation

Glasroc F FIRECASE has an operational tolerance from below freezing to +49°C, whereas some alternative technologies are often +5°C to +30°C. Using Glasroc F FIRECASE ensures that there are no potential problems with the build program in UK winter conditions.

Building programme efficiencies

The **FireCase** frameless encasement system allows other trades to work in close proximity and simultaneously. Some alternative technologies require areas of the site to be closed off due to the containment of overspray and fumes.

Spatial efficiencies

The **FireCase** frameless encasement system is fixed directly around the steel columns and beams, without any need for cavity spaces, which saves valuable floor space across a building compared to other technologies, e.g. intumescent paint over boarded with drylining.

Recycling waste

The British Gypsum Plasterboard Recycling Service offers the collection of Glasroc F FIRECASE direct from site for recycling in our factories. As regulations tighten and pressure on landfill intensifies, site waste is not only an environmental concern but can become a major cost to the project.

2 Benefits to acoustics

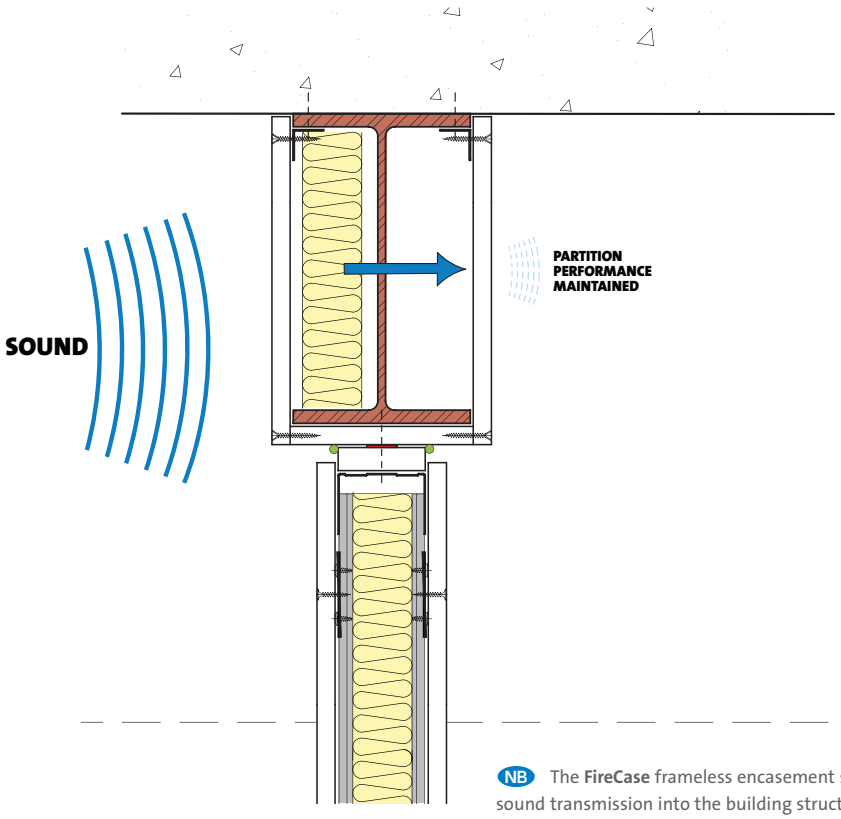

NB The **FireCase** frameless encasement system will help to minimise sound transmission into the building structure and can be detailed as to not downgrade the performance of adjoining partition systems.

Ease of maintenance

Under the Regulatory Reform (fire safety) Order (RRO) the responsible person has duty of care for maintaining the buildings fire protection systems. The **FireCase** frameless encasement system is robust but should damage occur it is simple to repair or replace, making management and maintenance simple for building owners.

Third party accreditation

Third party accredited product conformity certification schemes not only provide a means of identifying materials and designs of system, products or structures which have demonstrated that they have the requisite performance in fire, but additionally provide confidence that the systems, materials, products or structures actually supplied are provided to the same specification or design as that tested and assessed.

The Glasroc F FIRECASE board has a BBA certificate giving third party accreditation against its fire performance and factory production control. This gives the client peace of mind that the fire protection system will perform in a fire situation.

BBA certificate for Glasroc F FIRECASE

FireCase also appears in the ASFP Yellow Book - Fire protection for structural steel in buildings. In order to be listed in this publication the supporting test data and fire assessments are reviewed by an independent panel.

Fire Protection for Structural Steel in buildings

System components

Gypframe metal products

GA1 Steel Angle — **Length** 2900mm

Glasroc F board products

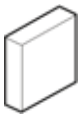

Glasroc F FIRECASE

Thickness	15, 20, 25, 30mm
Width	1200mm
Length	2000, 2400mm

Fixing products

Glasroc Staples
50mm long. Use with cordless Glasroc Impulse Staple Gun for board-to-board fixing (except 30mm board).

or

Glasroc F FIRECASE Screws
40, 50, 58, 70mm. For board-to-board and board-to-Gypframe metal fixing.

Gyproc Drywall Metal Angle Bead
For reinforcing external angles where maximum protection is required.

or

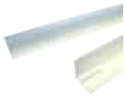

Gyproc No-Coat Ultraflex 325
High performance drywall corner reinforcement.

Finishing products

Gyproc Joint Cement
For decorative seamless jointing.

Thistle Board Finish or Thistle Multi-Finish
To provide a plaster skim finish.

or

Thistle Durafinish 25kg
To provide improved resistance to accidental damage.

Isover APR 1200
For improved acoustic performance (optional).

Glasroc F fixings

Glasroc F FIRECASE boards can be fixed with Glasroc Staples or Glasroc F FIRECASE Screws. Refer to **Table 1** to establish the minimum length of fixing.

Table 1 - Glasroc F fixings

Board thickness (mm)	Minimum fixing length Board-to-board fixing	Board-to-metal fixing
15	40mm Glasroc F FIRECASE Screws or 50mm Glasroc Staples	40mm Glasroc F FIRECASE Screws
20	50mm Glasroc F FIRECASE Screws or 50mm Glasroc Staples	40mm Glasroc F FIRECASE Screws
25	58mm Glasroc F FIRECASE Screws or 50mm Glasroc Staples	40mm Glasroc F FIRECASE Screws
30	70mm Glasroc F FIRECASE Screws	40mm Glasroc F FIRECASE Screws
15 + 20	40mm & 50mm Glasroc F FIRECASE Screws or 50mm Glasroc Staples	40mm & 50mm Glasroc F FIRECASE Screws

Installation

Four-sided protection to steel columns

Cladding is commenced from the base of the column. Boards are positioned and staple-fixed board-to-board using a Glasroc Impulse Staple Gun (or similar) or alternatively using Glasroc F FIRECASE Screws of appropriate length. Board joints on adjacent sides are staggered by a minimum 600mm. For double layer linings, board joints are staggered between layers by a minimum 300mm.

Three-sided protection to steel columns incorporating steel angles

Gypframe GA1 Steel Angle is fixed to the wall both sides of the column. Additional steel angles are incorporated where the column flange is at right angles to the wall structure. Refer to **Construction details** later. Boards are positioned and screw-fixed to the steel angles. Board-to-board fixings are made by using Glasroc Staples or using Glasroc F FIRECASE Screws. For double layer linings, board joints are staggered between layers.

Three-sided protection to steel beams incorporating steel angles

The procedure is as for columns except that for single layer encasements, fascia board joints are backed with Glasroc F FIRECASE. Strips of Glasroc F FIRECASE are cut to a minimum 60mm width and staple or screw-fixed behind fascia board ends so as to half-lap the joints. Refer to **Construction details** later.

Three-sided protection to steel columns and beams incorporating Glasroc F FIRECASE soldiers to support single layer linings providing up to 90 minutes fire protection

Glasroc F FIRECASE soldiers are pre-cut to fit neatly into the steel section. The soldiers are located into both sides of the section at 1200mm maximum centres as boarding progresses. At fascia board joints, two soldiers are fitted side by side so that each one finishes flush with the board end. Cladding is fixed to each joint soldier and also any intermediate soldiers using three Glasroc Staples or Glasroc F FIRECASE Screws. Boarding is continued as previously, staggering board joints.

NB Boards are cut using a suitable mechanical saw. Board fixings throughout (including fixings to steel angles) are at 150mm centres. Steel angles are fixed at maximum 600mm centres.

Glasroc F FIRECASE providing up to 180 minutes fire protection to steel columns using GypLyner ENCASE system

Gypframe GL10 GypLyner Steel Framing Clips are friction-fitted at maximum 800mm centres onto the column flanges. Gypframe GL1 Lining Channel is located over the clips to form the steel framework. Where lengths of Gypframe GL1 Lining Channel abut, GL10 clips are located either side to provide support. Alternatively use Gypframe GL3 Channel Connector to join the ends of Gypframe GL1 Lining Channels together. Boards are cut to width and fixed to all framing members using Gyproc Drywall Screws. Board joints on adjacent sides are staggered by a minimum 600mm. Short lengths of Gypframe GL1 Lining Channel, Gypframe GFS1 Fixing Strap, or Gypframe GFT1 Fixing 'T' are cut to form horizontal noggings to back board end joints. The Glasroc F FIRECASE lining boards are fixed to the framework at 300mm centres.

Design

Planning - key factors
The **FireCase** frameless encasement system is suitable for protecting structural steel sections with a section factor A/V (Hp/A) up to 260m-1, calculated on the basis of box protection to three or four sides as required. It will protect universal column and beam sections described in *BS 4: Part 1: 2005*, and many joist and castellated beam sections.

Lining selection
To determine the thickness of cladding required, the designer should follow the procedure below:

1. Find out what period of fire resistance is needed.
2. Ascertain whether protection is required on three or four sides of the section.
3. Determine which critical temperature is to be used (usually 550°C).
4. Determine if the performance standard required is BS or EN.
5. Refer to **Tables 5 - 24** for the relevant steel size. Locate the steel section to be protected, listed by its size and mass per metre, and read off the section factor A/V.
6. Refer to **Tables A - L** for the relevant A/V (Hp/A) . Locate the A/V value on the vertical scale. Read across the chart to the column relating to the period of fire resistance required and read off the designated thickness of Glasroc F FIRECASE cladding required to form the encasement.

For castellated sections and cellular beams, please refer to the Association for Specialist Fire Protection (ASFP) publication 'Fire protection for structural steel in buildings - 4th edition', for guidance.

Partition fixing
Partitions and wall linings may be fixed directly to the Glasroc F FIRECASE cladding as long as:

1. The fire resistance requirement of the partition is 60 minutes or less.
2. There are no special requirements for pressure resistance, e.g. around lift shafts.
3. There are no special loading requirements, i.e. Heavy Duty or Severe Duty as defined in recognised partition performance specifications, e.g. *BS 5234*. Refer to **Construction detail - 6** later.

Where these criteria are not met, the partition framing must be suitably fixed to the structural steel section, through the Glasroc F FIRECASE cladding. Where the partition abuts the web of the structural steel, a suitable steel nogging must be provided. Refer to **Construction details - 7** later.

Additional support
Where steel section web dimensions exceed 600mm, additional support will be required for the cladding. Refer to **Construction detail - 11** later.

Tiling
Tiles can be applied using conventional tile adhesives without pre-treatment of the Glasroc F FIRECASE board.

Finishing
Glasroc F FIRECASE joints are treated using Gyproc Joint Tape bedded in Gyproc Joint Cement. External angles and corners can be reinforced using Gyproc No-Coat Ultraflex 325 bedded in Gyproc Joint Cement. If a plaster finish is required, joints should be reinforced and Thistle Board Finish, Thistle Multi-Finish or Thistle Durafinish applied.

NB Jointing and finishing of the Glasroc F FIRECASE board is not a requirement to meeting the specified fire protection period. Gaps up to 3mm can be left unfilled.

180 minute protection to columns
For periods of fire protection up to 180 minutes for columns Glasroc F FIRECASE can be incorporated into the **GypLyner ENCASE** system.

Guidance for alternative section types (box, angles, etc)
The **FireCase** steel encasement system can be used around structural hollow sections and angles in accordance with the recommendations in *ENV 13381-4: 2002* provided the maximum A/V and lining thickness does not exceed the values given in **Tables A - L** later.

Steel members used for wind bracing should be based on the actual section factor or a nominal value of 200^{-1}, whichever is the lower value in accordance with *BS 5950: Part 8: 2003*.

Composite beams and voids

When a steel beam is supporting a profiled steel deck, voids are created between the deck and the top flange of the beam. These voids could increase the temperature rise of the beam should a fire occur and may need to be filled with a non-combustible material with proven fire-stopping ability. Voids must be filled on beams that are part of compartment walls in order to maintain the insulation and integrity performance. Refer to **Table 2** below to determine the requirements for voids.

Steel - the concept of Section Factor (A/V)

The rate of increase in temperature of a steel cross-section is determined by the ratio of the heated surface area (A) to the volume (V). This ratio, A/V, has units of m^{-1} and is known as the 'Section Factor'. Steel sizes with a low Section Factor will heat up at a slower rate as illustrated in **Table 3**.

A steel section with a large surface area (A) will receive more heat than one with a smaller surface area. Also, the greater the volume (V) of the section, the longer it will take to heat up. It follows therefore, that a small thick section will be slower to increase in temperature than a large thin one. The Section Factor (A/V) is thus a measure of the rate at which a section will heat up in a fire. The higher the value of the Section Factor the greater the protection thickness required will be.

Table 2 - Composite beams and voids

Trapezoidal deck

Beam type	Fire protection on beam	Fire resistance		
		Up to 60 minutes	90 minutes	Over 90 minutes
Composite	Materials assessed at 550°C	No increase in thickness	Increase thickness by 10% or assess thickness using A/V increased by 15%*	Fill voids
Composite	Materials assessed at 620°C	Increase thickness by 20% or assess thickness using A/V increased by 30%*	Increase thickness by 30% or assess thickness using A/V increased by 50%*	Fill voids
Non-composite	All types	Fill voids above the flange		

*The least onerous option may be used.

Dovetail deck

Beam type	Fire protection on beam	Fire resistance		
		Up to 60 minutes	90 minutes	Over 90 minutes
Composite	All types	Voids may be left unfilled for all periods of fire resistance		

Source: *Adapted from ASFP document 'Fire protection for structural steel in buildings – 4th edition'.*

Table 3 - Concept of the Section Factor

Section Factor = A/V (Hp/A)
A = Surface area of steel exposed to fire per unit of length
V = Volume of the section per unit length

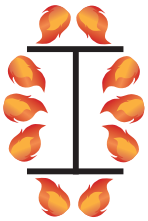

- **High surface area**
- **Low volume**
- **Fast heating**

- **Low surface area**
- **High volume**
- **Slow heating**

Source: *Adapted from ASFP document 'Fire protection for structural steel in buildings – 4th edition'.*

Calculating A/V (Hp/A)

In calculating the Section Factor values the full volume (V) is used whether the section is exposed on three or four sides as the whole of the steel section will be receiving heat. The value of (A) is the exposed surface area and that depends on the configuration of the fire protection.

In the case of a 'box' protection, the surface area is taken as the sum of the inside dimensions of the smallest possible rectangular or square encasement.

Table 4 - Calculating exposed surface area (A)

Steel section	Box and solid protect				
Universal beams, universal columns and joists (plain and castellated) 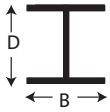	4 sides 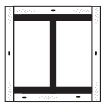	3 sides	3 sides	2 sides 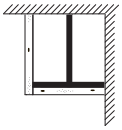	1 side 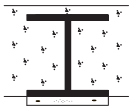
A (Hp)	2B + 2D	B + 2D	B + 2D	B + D	B
Structural and rolled tees 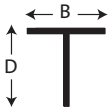	4 sides 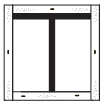	3 sides	3 sides		
A (Hp)	2B + 2D	B + 2D	B + 2D		
Angles 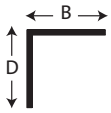	4 sides	3 sides 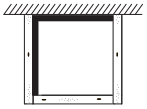	3 sides 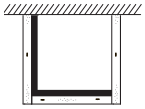		
A (Hp)	2B + 2D	B + 2D	B + 2D		
Channels 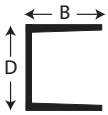	4 sides 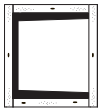	3 sides 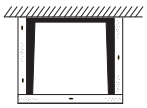	3 sides 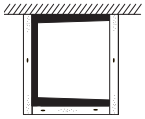		
A (Hp)	2B + 2D	2B + D	B + 2D		
Hollow sections, square or rectangular 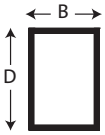	4 sides	3 sides 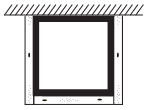			
A (Hp)	2B + 2D	B + 2D			
Hollow sections, circular 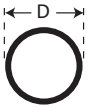	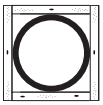				
A (Hp)	π D				

Source: *Adapted from ASFP document 'Fire protection for structural steel in buildings – 4th edition'.*

Steel work sizes

Table 5 - Section factor A/V (Hp/A) of UK beams

UK beams (UKB)

Dimensions to *BS4 Part 1: 2005*

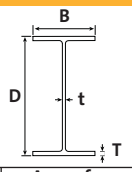

Designation		Depth of	Width of	Thickness		Area of	Section factor A/V (Hp/A) Box	
							3 sides	4 sides
Serial size mm	Mass / metre kg	section D mm	section B mm	Web t mm	Flange T mm	section cm²	m⁻¹	m⁻¹
1016 x 305	487	1036.1	308.5	30.0	54.1	619.89	40	45
	438	1025.9	305.4	26.9	49.0	556.62	40	50
	393	1016.0	303.0	24.4	43.9	500.24	45	55
	349	1008.1	302.0	21.1	40.0	445.15	50	60
	314	1000.0	300.0	19.1	35.9	400.41	55	65
	272	990.1	300.0	16.5	31.0	346.86	65	75
	249	980.2	300.0	16.5	26.0	316.88	70	80
	222	970.3	300.0	16.0	21.1	282.82	80	90
914 x 419	388	921.0	420.5	21.4	36.6	494.22	45	55
	343	911.8	418.5	19.4	32.0	437.30	50	60
914 x 305	289	926.6	307.7	19.5	32.0	368.27	60	65
	253	918.4	305.5	17.3	27.9	322.83	65	75
	224	910.4	304.1	15.9	23.9	285.64	75	85
	201	903.0	303.3	15.1	20.2	255.92	80	95
838 x 292	226	850.9	293.8	16.1	26.8	288.56	70	80
	194	840.7	292.4	14.7	21.7	246.82	80	90
	176	834.9	291.7	14.0	18.8	224.02	90	100
762 x 267	197	769.8	268.0	15.6	25.4	250.64	70	85
	173	762.2	266.7	14.3	21.6	220.37	80	95
	147	754.0	265.2	12.8	17.5	187.19	95	110
	134	750.0	264.4	12.0	15.5	170.58	105	120
686 x 254	170	692.9	255.8	14.5	23.7	216.83	75	90
	152	687.5	254.5	13.2	21.0	194.08	85	95
	140	683.5	253.7	12.4	19.0	178.43	90	105
	125	677.9	253.0	11.7	16.2	159.48	100	115
610 x 305	238	635.8	311.4	18.4	31.4	303.33	50	60
	179	620.2	307.1	14.1	23.6	228.08	70	80
	149	612.4	304.8	11.8	19.7	119.04	80	95
610 x 229	140	617.2	230.2	13.1	22.1	178.19	80	95
	125	612.2	229.0	11.9	19.6	159.34	90	105
	113	607.6	228.2	11.1	17.3	143.94	100	115
	101	602.6	227.6	10.5	14.8	128.92	110	130
610 x 178	100	607.4	179.2	11.3	17.2	128.00	110	125
	92	603.0	178.8	10.9	15.0	117.00	120	135
	82	598.6	177.9	10.0	12.8	104.00	130	150
533 x 312	273	577.1	320.2	21.1	37.6	348.00	40	50
	219	560.3	317.4	18.3	29.2	279.00	50	65
	182	550.7	314.5	15.2	24.4	231.00	60	75
	151	542.5	312.0	12.7	20.3	192.00	75	90
533 x 210	138	549.1	213.9	14.7	23.6	176.00	75	85
	122	544.5	211.9	12.7	21.3	155.39	85	95
	109	539.5	210.8	11.6	18.8	138.86	95	110
	101	536.7	210.0	10.8	17.4	128.67	100	115
	92	533.1	209.3	10.1	15.6	117.38	110	125
	82	528.3	208.8	9.6	13.2	104.69	120	140

Table 6 - Section factor A/V (Hp/A) of UK beams

UK beams (UKB)

Dimensions to *BS4 Part 1: 2005*

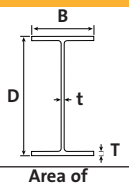

Designation		Depth of	Width of	Thickness		Area of	Section factor A/V (Hp/A) Box	
Serial size mm	Mass / metre kg	section D mm	section B mm	Web t mm	Flange T mm	section cm²	3 sides m⁻¹	4 sides m⁻¹
533 x 165	85	534.9	166.5	10.3	16.5	108.00	115	130
	75	529.1	165.9	9.7	13.6	95.20	130	145
	66	524.7	165.1	8.9	11.4	83.70	145	165
457 x 191	161	492.0	199.4	18.0	32.0	206.00	60	65
	133	480.6	196.7	15.3	26.3	170.00	70	80
	106	469.2	194.0	12.6	20.6	135.00	85	100
	98	467.2	192.8	11.4	19.6	125.26	90	105
	89	463.4	191.9	10.5	17.7	113.76	100	115
	82	460.0	191.3	9.9	16.0	104.48	105	125
	74	457.0	190.4	9.0	14.5	94.63	115	135
	67	453.4	189.9	8.5	12.7	85.51	130	150
457 x 152	82	465.8	155.3	10.5	18.9	104.53	105	120
	74	462.0	154.4	9.6	17.0	94.48	115	130
	67	458.0	153.8	9.0	15.0	85.55	125	145
	60	454.6	152.9	8.1	13.3	76.23	140	160
	52	449.8	152.4	7.6	10.9	66.64	160	180
406 x 178	85	417.2	181.9	10.9	18.2	109.00	95	110
	74	412.8	179.5	9.5	16.0	94.51	105	125
	67	409.4	178.8	8.8	14.3	85.54	115	140
	60	406.4	177.9	7.9	12.8	76.52	130	155
	54	402.6	177.7	7.7	10.9	68.95	145	170
406 x 140	53	406.6	143.3	7.9	12.9	67.90	140	160
	46	403.2	142.2	6.8	11.2	58.64	160	185
	39	398.0	141.8	6.4	8.6	49.65	190	215
356 x 171	67	363.4	178.1	9.1	15.7	85.49	105	125
	57	358.0	172.2	8.1	13.0	72.55	120	145
	51	355.0	171.5	7.4	11.5	64.91	135	160
	45	351.4	171.1	7.0	9.7	57.33	150	180
356 x 127	39	353.4	126.0	6.6	10.7	49.77	165	195
	33	349.0	125.4	6.0	8.5	42.13	195	225
305 x 165	54	310.4	166.9	7.9	13.7	68.77	115	140
	46	306.6	165.7	6.7	11.8	58.75	135	160
	40	303.4	165.0	6.0	10.2	51.32	150	185
305 x 127	48	311.0	125.3	9.0	14.0	61.23	120	145
	42	307.2	124.3	8.0	12.1	53.40	140	160
	37	304.4	123.4	7.1	10.7	47.18	155	180
305 x 102	33	312.7	102.4	6.6	10.8	41.83	175	200
	28	308.7	101.8	6.0	8.8	35.88	200	230
	25	305.1	101.6	5.8	7.0	31.60	225	255
254 x 146	43	259.6	147.3	7.2	12.7	54.77	120	150
	37	256.0	146.4	6.3	10.9	47.16	140	170
	31	251.4	146.1	6.0	8.6	39.68	165	200
254 x 102	28	260.4	102.2	6.3	10.0	36.08	175	200
	25	257.2	101.9	6.0	8.4	32.04	190	225
	22	254.0	101.6	5.7	6.8	28.02	220	255
203 x 133	30	206.8	133.9	6.4	9.6	38.21	145	180
	25	203.2	133.2	5.7	7.8	31.97	170	210
203 x 102	23	203.2	101.8	5.4	9.3	29.40	175	205
178 x 102	19	177.8	101.2	4.8	7.9	24.26	190	230
152 x 89	16	152.4	88.7	4.5	7.7	20.32	195	235
127 x 76	13	127.0	76.0	4.0	7.6	16.52	200	245

Table 7 - Section factor A/V (Hp/A) of UK columns

UK columns (UKC)

Dimensions to *BS4 Part 1: 2005*

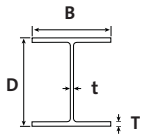

Designation		Depth of	Width of	Thickness		Area of	Section factor A/V (Hp/A) Box	
Serial size mm	Mass / metre kg	section D mm	section B mm	Web t mm	Flange T mm	section cm²	3 sides m⁻¹	4 sides m⁻¹
356 x 406	634	474.6	424.0	47.6	77.0	807.55	15	20
	551	455.6	418.5	42.1	67.5	701.93	20	25
	467	436.6	412.2	35.8	58.0	594.91	20	30
	393	419.0	407.0	30.6	49.2	500.57	25	35
	340	406.4	403.0	26.6	42.9	433.04	30	35
	287	393.6	399.0	22.6	36.5	365.71	30	45
	235	381.0	394.8	18.4	30.2	299.43	40	50
356 x 368	202	374.6	374.7	16.5	27.0	257.22	45	60
	177	368.2	372.6	14.4	23.8	255.51	50	65
	153	362.0	370.5	12.3	20.7	194.80	55	75
	129	355.6	368.6	10.4	17.5	164.34	65	90
305 x 305	283	365.3	322.2	26.8	44.1	360.43	30	40
	240	352.5	318.4	23.0	37.7	305.79	35	45
	198	339.9	314.5	19.1	31.4	252.41	40	50
	158	327.1	311.2	15.8	25.0	201.36	50	65
	137	320.5	309.2	13.8	21.7	174.42	55	70
	118	314.5	307.4	12.0	18.7	150.20	60	85
	97	307.9	305.3	9.9	15.4	123.45	75	100
254 x 254	167	289.1	265.2	19.2	31.7	212.86	40	50
	132	276.3	261.3	15.3	25.3	168.13	50	65
	107	266.7	258.8	12.8	20.5	136.38	60	75
	89	260.3	256.3	10.3	17.3	133.31	70	90
	73	254.1	254.6	8.6	14.2	93.10	80	110
203 x 203	127	241.4	213.9	18.1	30.1	162.00	45	55
	113	235.0	212.1	16.3	26.9	145.00	45	60
	100	228.6	210.3	14.5	23.7	127.00	55	70
	86	222.2	209.1	12.7	20.5	109.64	60	80
	71	215.8	206.4	10.0	17.3	90.43	70	95
	60	209.6	205.8	9.4	14.2	76.37	80	110
	52	206.2	204.3	7.9	12.5	66.28	95	125
	46	203.2	203.6	7.2	11.0	58.73	105	140
152 x 152	51	170.2	157.4	11.0	15.7	65.20	75	100
	44	166.0	155.9	9.5	13.6	56.10	85	115
	37	161.8	154.4	8.0	11.5	47.11	100	135
	30	157.6	152.9	6.5	9.4	38.26	120	160
	23	152.4	152.2	5.8	6.8	29.25	155	210

Table 8 - Section factor A/V (Hp/A) of joists

Joists

Dimensions to *BS4 Part 1: 1993*

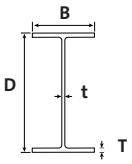

Designation		Depth of	Width of	Thickness		Area of	Section factor A/V (Hp/A) Box	
							3 sides	4 sides
Serial size mm	Mass / metre kg	section D mm	section B mm	Web t mm	Flange T mm	section cm²	m⁻¹	m⁻¹
203 x 152	52	203.2	152.4	8.9	16.5	66.60	85	105
152 x 127	37	152.4	127.0	10.4	13.2	47.50	90	120

Table 9 - Section factor A/V (Hp/A) of parallel flange channels

Parallel flange channels

Dimensions to *BS4 Part 1: 2005*

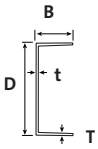

Designation		Depth of	Width of	Thickness		Area of	Section factor A/V (Hp/A) Box			
							3 sides		4 sides	
Serial size mm	Mass / metre kg	section D mm	section B mm	Web t mm	Flange T mm	section cm²	m⁻¹	m⁻¹	m⁻¹	m⁻¹
430 x 100	64	430	100	11.0	19.0	82.09	115	75	75	130
380 x 100	54	380	100	9.5	17.5	68.74	125	85	85	140
300 x 100	46	300	100	9.0	16.5	58.00	120	85	85	140
300 x 90	41	300	90	9.0	15.5	52.78	130	90	90	150
260 x 90	35	260	90	8.0	14.0	44.38	135	100	100	160
260 x 75	28	260	75	7.0	12.0	35.14	170	115	115	190
230 x 90	32	230	90	7.5	14.0	40.97	135	100	100	155
230 x 75	26	230	75	6.5	12.5	32.69	165	115	115	185
200 x 90	30	200	90	7.0	14.0	37.86	130	100	100	155
200 x 75	23	200	75	6.0	12.5	29.87	160	115	115	185
180 x 90	26	180	90	6.5	12.5	33.19	135	110	110	165
180 x 75	20	180	75	6.0	10.5	25.91	170	125	125	195
150 x 90	24	150	90	6.5	12.0	30.41	130	110	110	160
150 x 75	18	150	75	5.5	10.0	22.77	165	130	130	200
125 x 65	15	125	65	5.5	9.5	18.80	170	135	135	200
100 x 50	10	100	50	5.0	8.5	13.00	190	155	155	230

Table 10 - Section factor A/V (Hp/A) of equal angles

Equal angles (UKA)

Dimensions to *BS EN 10056-1: 1999*

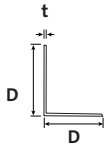

Size D x D mm	Thickness t mm	Mass per metre kg/m	Area of section cm²	Section factor A/V (Hp/A) Box 3 sides m⁻¹	Section factor A/V (Hp/A) Box 4 sides m⁻¹
200 x 200	24	71.1	90.6	65	90
	20	59.9	76.3	80	105
	18	54.2	69.1	85	115
	16	48.5	61.8	95	130
150 x 150	18	40.1	51.0	90	120
	15	33.8	43.0	105	140
	12	27.3	34.8	130	170
	10	23.0	29.3	155	205
120 x 120	15	26.6	33.9	105	140
	12	21.6	27.5	130	175
	10	18.2	23.2	155	205
	8	14.7	18.7	190	255
100 x 100	15	21.9	27.9	110	145
	12	17.8	22.7	130	175
	10	15.0	19.2	155	210
	8	12.2	15.5	195	260
90 x 90	12	15.9	20.3	135	175
	10	13.4	17.1	160	210
	8	10.9	13.9	195	260
	7	9.6	12.2	220	295

Table 11 - Section factor A/V (Hp/A) of unequal angles

Unequal angles (UKA)

Dimensions to *BS EN 10056-1: 1999*

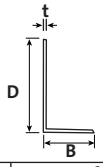

Designation Size mm	Designation Thickness t mm	Mass per metre mm	Area of section cm²	Section factor A/V (Hp/A) Box 3 sides m⁻¹	Box 3 sides m⁻¹	Box 3 sides m⁻¹	Box 3 sides m⁻¹	Box 4 sides m⁻¹
200 x 150	18	47.1	60.0	90	85	90	85	115
	15	39.6	50.5	110	100	110	100	140
	12	32.0	40.8	135	125	135	125	170
200 x 100	15	33.7	43.0	115	95	115	95	140
	12	27.3	34.8	145	115	145	115	170
	10	23.0	29.2	170	135	170	135	205
150 x 90	15	26.6	33.9	115	95	115	95	140
	12	21.6	27.5	140	120	140	120	175
	10	18.2	23.2	170	145	170	145	205
150 x 75	15	24.8	31.7	120	95	120	95	140
	12	20.2	25.7	145	115	145	115	175
	10	17.0	21.7	175	140	175	140	210
125 x 75	12	17.8	22.7	145	120	145	120	175
	10	15.0	19.1	170	145	170	145	210
	8	12.2	15.5	210	180	210	180	260
100 x 75	12	15.4	19.7	140	125	140	125	180
	10	13.0	16.6	165	150	165	150	210
	8	10.6	13.5	205	185	205	185	260
100 x 65	10	12.3	15.6	170	145	170	145	210
	8	9.9	12.7	210	180	210	180	260
	7	8.8	11.2	235	205	235	205	295

Table 12 - Section factor A/V (Hp/A) of tees

Tees (UKT)

Split from UK beams

Dimensions to *BS4 Part 1: 2005*

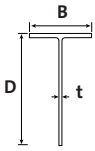

Designation		Width of	Depth of	Thickness	Area of	Section factor A/V (Hp/A)		
						Box		
						3 sides		4 sides
Serial size mm	Mass / metre kg	section B mm	section D mm	web t mm	section cm²	m⁻¹	m⁻¹	m⁻¹
254 x 343	62.6	253.0	338.9	11.7	79.73	115	115	150
305 x 305	119.0	311.4	317.9	18.4	152.00	60	60	85
	89.5	307.1	310.0	14.1	114.03	80	80	110
	74.6	304.8	306.1	11.8	95.01	95	95	130
229 x 305	69.9	230.2	308.5	13.1	89.08	95	95	120
	62.5	229.0	306.0	11.9	79.66	105	105	135
	56.5	228.2	303.7	11.1	71.96	115	115	150
	50.6	227.6	301.2	10.5	64.45	130	130	165
178 x 305	50.1	179.2	303.7	11.3	63.90	125	125	150
	46.1	178.8	301.5	10.9	58.70	135	135	165
	40.9	177.9	299.3	10.0	52.10	150	150	185
312 x 267	136.7	320.2	288.8	21.1	1740	50	50	70
	109.4	317.4	280.4	18.3	1390	65	65	85
	90.7	314.5	275.6	15.2	1160	75	75	100
	75.3	312.0	271.5	12.7	95.90	90	120	120
210 x 267	69.1	213.9	274.5	14.7	23.60	85	85	110
	61.0	211.9	272.2	12.7	77.69	95	95	125
	54.5	210.8	269.7	11.6	69.43	110	110	140
	50.5	210.0	268.3	10.8	64.33	115	115	150
	46.0	209.3	266.5	10.1	58.68	125	125	160
	41.1	208.8	264.1	9.6	52.34	140	140	180
165 x 267	42.3	166.5	267.1	10.3	54.00	130	130	160
	37.4	165.9	264.5	9.7	47.60	145	145	180
	32.8	165.1	262.4	8.9	41.90	165	165	205
191 x 229	80.7	199.4	246.0	18.0	1030	65	65	85
	66.6	196.7	240.3	15.3	84.90	80	80	105
	52.9	194.0	234.6	12.6	67.40	100	100	125
	49.1	192.8	233.5	11.4	62.62	105	105	135
	44.6	191.9	231.6	10.5	58.87	115	115	150
	41.0	191.3	229.9	9.9	52.23	125	125	160
	37.1	190.4	228.4	9.0	47.31	135	135	175
	33.5	189.9	226.6	8.5	42.75	150	150	195
152 x 229	41.0	155.3	232.8	10.5	52.26	120	120	150
	37.1	154.4	230.9	9.6	47.23	130	130	165
	33.6	153.8	228.9	9.0	42.77	145	145	180

Table 13 - Section factor A/V (Hp/A) of tees

Tees (UKT)

Split from UK beams

Dimensions to *BS4 Part 1: 2005*

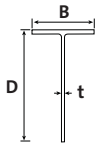

Designation		Width of	Depth of	Thickness	Area of	Section factor A/V (Hp/A)		
						Box		
						3 sides		4 sides
Serial size mm	Mass / metre kg	section B mm	section D mm	web t mm	section cm²	m^{-1}	m^{-1}	m^{-1}
152 x 229	29.9	152.9	227.2	8.1	38.11	160	160	200
	26.1	152.4	224.8	7.6	33.31	180	180	225
178 x 203	42.6	181.9	208.6	10.9	54.30	110	110	145
	37.1	179.5	206.3	9.5	47.24	125	125	165
	33.5	178.8	204.6	8.8	42.76	140	140	180
	30.0	177.9	203.1	7.9	38.25	155	155	200
	27.0	177.7	201.2	7.7	34.47	170	170	220
140 x 203	26.6	143.3	203.3	7.9	34.00	160	160	205
	23.0	142.2	201.5	6.8	29.31	185	185	235
	19.5	141.8	198.9	6.4	24.82	215	215	275
171 x 178	33.5	173.2	181.6	9.1	42.74	125	125	165
	28.5	172.2	178.9	8.1	36.27	145	145	195
	25.5	171.5	177.4	7.4	32.44	160	160	215
	22.5	171.1	175.6	7.0	28.66	180	180	240
127 x 178	19.5	126.0	176.6	6.6	24.88	195	195	245
	16.5	125.4	174.4	6.0	21.06	225	225	285
165 x 152	27.0	166.9	155.1	7.9	34.38	140	140	185
	23.0	165.7	153.2	6.7	29.37	160	160	215
	20.1	165.0	151.6	6.0	25.65	185	185	245
127 x 152	24.0	125.3	155.4	9.0	30.61	140	140	185
	20.9	124.3	153.5	8.0	26.69	160	160	210
	18.5	123.4	152.1	7.1	23.58	180	180	235
102 x 152	16.4	102.4	156.3	6.6	20.91	200	200	245
	14.1	101.8	154.3	6.0	17.93	230	230	285
	12.4	101.6	152.5	5.8	15.80	255	255	320
146 x 127	21.5	147.3	129.7	7.2	27.38	150	150	200
	18.5	146.4	127.9	6.3	23.58	170	170	235
	15.5	146.1	125.6	6.0	19.83	200	200	275
102 x 127	14.1	102.2	130.1	6.3	18.03	200	200	260
	12.6	101.9	128.5	6.0	16.01	225	225	290
	11.0	101.6	126.9	5.7	14.00	255	255	325
133 x 102	15.0	133.9	103.3	6.4	19.10	180	180	250
	12.5	133.2	101.5	5.7	15.98	210	210	295

Table 14 - Section factor A/V (Hp/A) of tees

Structural tees

Split from UK columns

Dimensions to *BS4 Part 1: 2006*

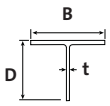

Designation		Width of	Depth of	Thickness	Area of	Section factor A/V (Hp/A)		
						Box		
						3 sides		4 sides
Serial size mm	Mass / metre kg	section B mm	section D mm	web t mm	section cm²	m⁻¹	m⁻¹	m⁻¹
305 x 152	79.0	311.2	163.5	15.8	100.67	65	65	95
	68.4	309.2	160.2	13.8	87.20	70	70	110
	58.9	307.4	157.2	12.0	75.10	85	85	125
	48.4	305.3	153.9	9.9	61.72	100	100	150
254 x 127	83.5	265.2	144.5	19.2	106.00	50	50	75
	66.0	261.3	138.1	15.3	84.06	65	65	95
	53.5	258.8	133.3	12.8	68.18	75	75	115
	44.4	256.3	130.1	10.3	56.65	90	90	135
	36.5	254.6	127.0	8.6	46.55	110	110	165
203 x 102	63.7	213.9	120.7	18.1	81.20	55	55	80
	56.7	212.1	117.5	16.3	72.30	60	60	90
	49.8	210.3	114.3	14.5	63.40	70	70	100
	43.0	209.1	111.0	12.7	54.81	80	80	115
	35.5	206.4	107.8	10.0	45.20	95	95	140
	30.0	205.8	104.7	9.4	38.18	110	110	165
	26.0	204.3	103.0	7.9	33.13	125	125	185
	23.0	203.6	101.5	7.2	29.36	140	140	210
152 x 76	25.6	157.4	85.1	11.0	32.60	100	100	150
	22.0	155.9	83.0	9.5	28.00	115	115	170
	18.5	154.4	80.8	8.0	23.55	135	135	200
	15.0	152.9	78.7	6.5	19.12	160	160	240
	11.5	152.2	76.1	5.8	14.62	210	210	310

Table 15 - Section factor A/V (Hp/A) of circular hollow sections

Circular hollow sections

Dimensions to *EN 10210 S355J2H*

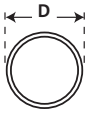

Size D x D	Wall thickness t mm	Mass per metre kg	Area of the section A cm²	Section factor A/V (Hp/A) Box m⁻¹
21.3	2.6	1.20	1.53	440
	2.9	1.32	1.68	400
	3.2	1.43	1.82	370
26.9	2.6	1.56	1.98	425
	2.9	1.72	2.19	385
	3.2	1.87	2.38	355
33.7	2.6	1.99	2.54	415
	2.9	2.20	2.81	375
	3.2	2.41	3.07	345
	3.6	2.67	3.40	310
	4.0	2.93	3.73	285
42.4	2.6	2.55	3.25	410
	2.9	2.82	3.60	370
	3.2	3.09	3.94	340
	3.6	3.44	4.39	305
	4.0	3.79	4.83	275
	5.0	4.61	5.87	230
48.3	2.9	3.25	4.14	365
	3.2	3.56	4.53	335
	3.6	3.97	5.06	300
	4.0	4.37	5.57	270
	5.0	5.34	6.80	225
60.3	2.9	4.11	5.23	360
	3.2	4.51	5.74	330
	3.6	5.03	6.41	295
	4.0	5.55	7.07	270
	5.0	6.82	8.69	220
76.1	2.9	5.24	6.67	360
	3.2	5.75	7.33	325
	3.6	6.44	8.20	290
	4.0	7.11	9.06	265
	5.0	8.77	8.77	215
	6.3	10.80	13.8	175
88.9	2.9	6.15	7.84	355
	3.2	6.76	8.62	325
	3.6	7.57	9.65	290
	4.0	8.38	10.70	260
	5.0	10.3	13.20	210
	6.3	12.8	16.30	170

Table 16 - Section factor A/V (Hp/A) of circular hollow sections

Circular hollow sections

Dimensions to *EN 10210 S355J2H*

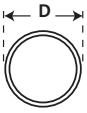

Size D x D	Wall thickness t mm	Mass per metre kg	Area of the section A cm²	Section factor A/V (Hp/A) Box m⁻¹
114.3	3.2	8.77	11.2	320
	3.6	9.83	12.5	285
	4.0	10.9	13.9	260
	5.0	13.5	17.2	210
	6.3	16.8	21.4	170
139.7	3.2	10.8	13.7	320
	3.6	12.1	15.4	285
	4.0	13.4	17.1	255
	5.0	16.6	21.2	205
	6.3	20.7	26.4	165
	8.0	26.0	33.1	135
	10.0	32.0	40.7	110
168.3	5.0	20.1	25.7	205
	6.3	25.2	32.1	165
	8.0	31.6	40.3	130
	10.0	39.0	49.7	105
	12.5	48.0	61.2	85
193.7	5.0	23.3	29.6	205
	6.3	29.1	37.1	165
	8.0	36.6	46.7	130
	10.0	45.3	57.7	105
	12.5	55.9	71.2	85
219.1	5.0	26.4	33.6	205
	6.3	33.1	42.1	165
	8.0	41.6	53.1	130
	10.0	51.6	65.7	105
	12.5	63.7	81.1	85
	14.2	71.8	91.4	75
	16.0	80.1	102	65
244.5	5.0	29.5	37.6	205
	6.3	37.0	47.1	165
	8.0	46.7	59.4	130
	10.0	57.8	73.7	105
	12.5	71.5	91.1	85
	14.2	80.6	103.0	75
	16.0	90.2	115.0	65
273.0	5.0	33.0	42.1	205
	6.3	41.4	52.8	160
	8.0	52.3	66.6	130
	10.0	64.9	82.6	105

Table 17 - Section factor A/V (Hp/A) of circular hollow sections

Circular hollow sections

Dimensions to *EN 10210 S355J2H*

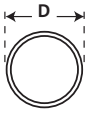

Size D x D	Wall thickness t mm	Mass per metre kg	Area of the section A cm²	Section factor A/V (Hp/A) Box m⁻¹
273.0	12.5	80.3	102.0	85
	14.2	90.6	115.0	75
	16.0	101.0	129.0	65
323.9	5.0	39.3	50.1	205
	6.3	49.3	62.9	160
	8.0	62.3	79.4	130
	10.0	77.4	98.6	105
	12.5	96.0	122.0	85
	14.2	108.0	138.0	75
	16.0	121.0	155.0	65
355.6	6.3	54.3	69.1	160
	8.0	68.6	87.4	130
	10.0	85.2	109.0	100
	12.5	106.0	135.0	85
	14.2	120.0	152.0	75
	16.0	134.0	171.0	65
406.4	6.3	62.2	79.2	160
	8.0	78.6	100.0	130
	10.0	97.8	125.0	100
	12.5	121.0	155.0	80
	14.2	137.0	175.0	75
	16.0	154.0	196.0	65
457.0	6.3	70.0	89.2	160
	8.0	88.6	113.0	130
	10.0	110.0	140.0	105
	12.5	137.0	175.0	80
	14.2	155.0	198.0	75
	16.0	174.0	222.0	65
508.0	6.3	77.9	99.3	160
	8.0	98.6	126.0	125
	10.0	123.0	156.0	100
	12.5	153.0	195.0	80
	14.2	173.0	220.0	75
	16.0	194.0	247.0	65

Table 18 - Section factor A/V (Hp/A) of square hollow sections

Square hollow sections

Dimensions to *EN 10210 S355J2H*

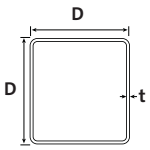

Designation: Size D x D	Wall thickness t mm	Mass per metre kg	Area of the section A cm²	Section factor A/V (Hp/A) Box 3 sides m⁻¹	Box 4 sides m⁻¹
40 x 40	3.0	3.41	4.34	275	370
	3.2	3.61	4.60	260	350
	3.6	4.01	5.10	235	315
	4.0	4.39	5.59	215	290
	5.0	5.28	6.73	180	240
50 x 50	3.0	4.35	5.54	270	365
	3.2	4.62	5.88	255	340
	3.6	5.14	6.54	230	305
	4.0	5.64	7.19	210	280
	5.0	6.85	8.73	175	230
	6.3	8.31	10.60	140	190
60 x 60	3.0	5.29	6.74	270	360
	3.2	5.62	7.16	250	335
	3.6	6.27	7.98	225	300
	4.0	6.90	8.79	205	120
	5.0	8.42	10.70	170	225
	6.3	10.30	13.10	140	185
	8.0	12.50	16.00	115	150
70 x 70	3.0	6.24	7.94	265	355
	3.2	6.63	8.44	250	335
	3.6	7.40	9.42	225	300
	4.0	8.15	10.40	205	270
	5.0	9.99	12.70	165	220
	6.3	12.30	15.60	135	180
	8.0	15.00	19.20	110	145
80 x 80	3.0	7.18	9.14	265	350
	3.2	7.63	9.72	250	330
	3.6	8.53	10.90	220	295
	4.0	9.41	12.00	200	270
	5.0	11.60	14.70	165	220
	6.3	14.20	18.10	135	180
	8.0	17.50	22.40	110	145
90 x 90	3.6	9.66	12.30	220	295
	4.0	10.70	13.60	200	265
	5.0	13.10	16.70	160	215
	6.3	16.20	20.70	130	175
	8.0	20.10	25.60	105	140
100 x 100	3.6	10.80	13.70	220	295
	4.0	11.90	15.20	200	265

Table 19 - Section factor A/V (Hp/A) of square hollow sections

Square hollow sections

Dimensions to
EN 10210 S355J2H

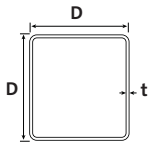

Designation				Section factor A/V (Hp/A) Box	
Size D x D	Wall thickness t mm	Mass per metre kg	Area of the section A cm²	3 sides m⁻¹	4 sides m⁻¹
100 x 100	5.0	14.7	18.7	160	215
	6.3	18.2	23.2	130	175
	8.0	22.6	28.8	105	140
	10.0	27.4	34.9	90	115
120 x 120	4.0	14.4	18.4	195	260
	5.0	17.8	22.7	160	215
	6.3	22.2	28.2	130	170
	8.0	27.6	35.2	105	140
	10.0	33.7	42.9	85	115
	12.5	40.9	52.1	70	95
140 x 140	5.0	21.0	26.7	160	210
	6.3	26.1	33.3	130	170
	8.0	32.6	41.6	100	135
	10.0	40.0	50.9	85	110
	12.5	48.7	62.1	70	90
150 x 150	5.0	22.6	28.7	160	210
	6.3	28.1	35.8	125	170
	8.0	35.1	44.8	100	135
	10.0	43.1	54.9	85	110
	12.5	52.7	67. 1	70	90
	16.0	66.2	83.0	55	75
160 x 160	5.0	24.1	30.7	160	210
	6.3	30.1	38.3	125	170
	8.0	37.6	48.0	100	135
	10.0	46.3	58.9	85	110
	12.5	56.6	72. 1	70	90
	14.2	63.3	80.7	60	80
	16.0	70.2	89.4	55	75
180 x 180	5.0	27.3	34.7	155	210
	6.3	34.0	43.3	125	170
	8.0	42.7	54.4	100	135
	10.0	52.5	66.9	80	110
	12.5	64.4	82.1	65	90
	14.2	72.2	92.0	60	80
	16.0	80.2	102.0	55	70
200 x 200	5.0	30.4	38.7	155	210
	6.3	38.0	48.4	125	165
	8.0	47.7	60.8	100	135
	10.0	58.8	74.9	85	110
	12.5	72.3	92.1	65	90
	14.2	81.1	103.0	60	80
	16.0	90.3	115.0	55	70

Table 20 - Section factor A/V (Hp/A) of square hollow sections

Square hollow sections

Dimensions to
EN 10210 S355J2H

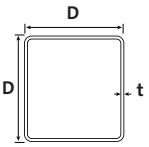

Designation				Section factor A/V (Hp/A) Box	
Size D x D	Wall thickness t mm	Mass per metre kg	Area of the section A cm²	3 sides m⁻¹	4 sides m⁻¹
250 x 250	5.0	38.3	48.7	155	205
	6.3	47.9	61.0	125	165
	8.0	60.3	76.8	100	130
	10.0	74.5	94.9	80	105
	12.5	91.9	117.0	65	85
	14.2	103.0	132.0	60	75
	16.0	115.0	147.0	55	70
260 x 260	6.3	49.9	63.5	125	165
	8.0	62.8	80.0	100	130
	10.0	77.7	98.9	80	105
	12.5	95.8	122.0	65	85
	14.2	108.0	137.0	60	75
	16.0	120.0	153.0	55	70
300 x 300	6.3	57.8	73.6	125	165
	8.0	72.8	92.8	100	130
	10.0	90.2	115.0	80	105
	12.5	112.0	142.0	65	85
	14.2	126.0	160.0	60	75
	16.0	141.0	179.0	50	70
350 x 350	8.0	85.4	109.0	100	130
	10.0	106.0	135.0	80	105
	12.5	131.0	167.0	65	85
	14.2	148.0	189.0	55	75
	16.0	166.0	211.0	50	70
400 x 400	8.0	97.9	125.0	100	130
	10.0	122.0	155.0	80	105
	12.5	151.0	192.0	65	85
	14.2	170.0	217.0	55	75
	16.0	191.0	243.0	50	70
	20.0	235.0	300.0	40	55

Table 21 - Section factor A/V (Hp/A) of rectangular hollow sections

Rectangular hollow sections

Dimensions to *EN 10210 S355J2H*

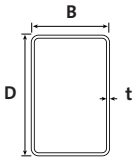

Designation		Mass per metre	Area of section	Section factor A/V (Hp/A)		
				Box		
				3 sides		4 sides
Size D x B	Thickness t mm	kg	cm²	m⁻¹	m⁻¹	m⁻¹
50 x 30	3.0	3.41	4.34	300	255	370
	3.2	3.61	4.60	285	240	350
	3.6	4.01	5.10	255	215	315
	4.0	4.39	5.59	235	200	290
	5.0	5.28	6.73	195	165	240
60 x 40	3.0	4.35	5.54	290	255	365
	3.2	4.62	5.88	275	240	340
	3.6	5.14	6.54	245	215	305
	4.0	5.64	7.19	225	195	280
	5.0	6.85	8.73	185	160	230
	6.3	8.31	10.60	150	135	190
80 x 40	3.0	5.29	6.74	300	240	360
	3.2	5.62	7.16	280	225	335
	3.6	6.27	7.98	250	200	300
	4.0	6.90	8.79	230	185	275
	5.0	8.42	10.70	190	150	225
	6.3	10.30	13.10	155	125	185
	8.0	12.50	16.00	125	100	150
90 x 50	3.0	6.24	7.94	290	240	355
	3.2	6.63	8.44	275	225	335
	3.6	7.40	9.42	245	205	300
	4.0	8.15	10.40	225	185	270
	5.0	9.99	12.70	185	150	220
	6.3	12.30	15.60	150	125	180
	8.0	15.00	19.20	120	100	150
100 x 50	3.0	6.71	8.54	295	235	355
	3.2	7.13	9.08	275	220	330
	3.6	7.96	10.10	250	200	300
	4.0	8.78	11.20	225	180	270
	5.0	10.80	13.70	185	150	220
	6.3	13.30	16.90	150	120	180
	8.0	16.30	20.80	120	100	145
	10.0	19.60	24.90	100	80	120
100 x 60	3.0	7.18	9.14	285	240	350
	3.2	7.63	9.72	270	230	330
	3.6	8.53	10.90	240	205	295
	4.0	9.41	12.00	220	185	270
	5.0	11.60	14.70	180	150	220
	6.3	14.20	18.10	145	125	180
	8.0	17.50	22.40	120	100	145
120 x 60	3.6	9.66	12.30	245	195	300
	4.0	10.70	13.60	220	180	265
	5.0	13.10	16.70	180	145	215
	6.3	16.20	20.70	145	120	175
	8.0	20.10	25.60	120	95	140
	10.0	24.30	30.90	100	80	120

Table 22 - Section factor A/V (Hp/A) of rectangular hollow sections

Rectangular hollow sections

Dimensions to *EN 10210 S355J2H*

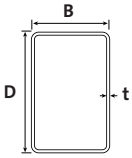

Designation		Mass per metre	Area of section	Section factor A/V (Hp/A)		
				Box		
				3 sides		4 sides
Size D x B	Thickness t mm	kg	cm²	m⁻¹	m⁻¹	m⁻¹
120 x 80	3.6	10.8	13.7	235	205	295
	4.0	11.9	15.2	210	135	265
	5.0	14.7	18.7	175	150	215
	6.3	18.2	23.2	140	120	175
	8.0	22.6	28.8	115	100	140
	10.0	27.4	34.9	95	80	115
150 x 100	4.0	15.1	19.2	210	185	260
	5.0	18.6	23.7	170	150	215
	6.3	23.1	29.5	135	120	170
	8.0	28.9	36.8	110	95	135
	10.0	35.3	44.9	90	80	115
	12.5	42.8	54.6	75	65	95
150 x 125	4.0	16.6	21.2	200	190	260
	5.0	20.6	26.2	165	155	210
	6.3	25.6	32.6	130	125	170
	8.0	32.0	40.8	105	100	135
	10.0	39.2	49.9	85	80	110
	12.5	47.7	60.8	70	70	90
160 x 80	4.0	14.4	18.4	220	175	260
	5.0	17.8	22.7	180	145	215
	6.3	22.2	28.2	145	115	170
	8.0	27.6	35.2	115	95	140
	10.0	33.7	42.9	95	75	115
	12.5	40.9	52.1	80	65	95
200 x 100	5.0	22.6	28.7	175	140	210
	6.3	28.1	35.8	140	115	170
	8.0	35.1	44.8	110	90	135
	10.0	43.1	54.9	95	75	110
	12.5	52.7	67.1	75	60	90
	16.0	65.2	83.0	60	50	75
200 x 120	5.0	24.1	30.7	170	145	210
	6.3	30.1	38.3	140	115	170
	8.0	37.6	48.0	110	95	135
	10.0	46.3	58.9	90	75	110
	12.5	56.6	72.1	75	65	90
	14.2	63.3	80.7	65	55	80
	16.0	70.2	89.4	60	50	75
200 x 150	5.0	26.5	33.7	165	150	210
	6.3	33.0	42.1	135	120	170
	8.0	41.4	52.8	105	95	135
	10.0	51.0	64.9	80	80	110
	12.5	62.5	79.6	70	65	90
	14.2	70.0	89.2	65	60	80
	16.0	77.7	99.0	55	55	70
250 x 100	5.0	26.5	33.7	180	135	210
	6.3	33.0	42.1	145	110	170
	8.0	41.4	52.8	115	85	135

Table 23 - Section factor A/V (Hp/A) of rectangular hollow sections

Rectangular hollow sections

Dimensions to *EN 10210 S355J2H*

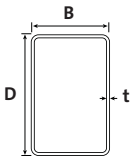

Designation		Mass per	Area of	Section factor A/V (Hp/A)		
				Box		
				3 sides		4 sides
Size D x B	Thickness t mm	metre kg	section cm²	m⁻¹	m⁻¹	m⁻¹
250 x 100	10.0	51.0	64.9	95	70	110
	12.5	62.5	79.6	75	60	90
	14.2	70.0	89.2	70	50	80
	16.0	77.7	99.0	65	45	70
250 x 150	5.0	30.4	38.7	170	145	210
	6.3	38.0	48.4	135	115	165
	8.0	47.7	60.8	110	90	135
	10.0	58.8	74.9	90	75	110
	12.5	72.3	92.1	75	60	90
	14.2	81.1	103.0	65	55	80
	16.0	90.3	115.0	60	50	70
250 x 200	10.0	66.7	84.9	85	80	110
	12.5	82.1	105.0	70	65	90
	14.2	92.3	118.0	60	55	80
260 x 140	5.0	30.4	38.7	170	140	210
	6.3	38.0	48.4	140	115	165
	8.0	47.7	60.8	110	90	135
	10.0	58.8	74.9	90	75	110
	12.5	72.3	92.1	75	60	90
	14.2	81.1	103.0	65	55	80
	16.0	90.3	115.0	60	50	70
300 x 100	5.0	30.4	38.7	180	130	210
	6.3	38.0	48.4	145	105	165
	8.0	47.7	60.8	115	85	135
	10.0	58.8	74.9	95	70	110
	12.5	72.3	92.1	80	55	90
	14.2	81.1	103.0	70	50	80
	16.0	90.3	115.0	65	45	70
300 x 150	8.0	54.0	68.8	110	90	130
	10.0	66.7	84.9	90	70	110
	12.5	82.1	105.0	75	60	90
	14.2	92.3	118.0	65	55	80
	16.0	103.0	131.0	60	50	70
300 x 200	5.0	38.3	48.7	165	145	205
	6.3	47.9	61.0	135	115	165
	8.0	60.3	76.8	105	95	130
	10.0	74.5	94.9	85	75	105
	12.5	91.9	117.0	70	60	85
	14.2	103.0	132.0	60	55	75
	16.0	115.0	147.0	55	50	70
300 x 250	6.3	52.8	67.3	130	120	165
	8.0	66.5	84.8	100	95	130
	10.0	82.4	105.0	85	80	105
	12.5	102.0	130.0	65	65	85
	14.2	115.0	146.0	60	55	75
	16.0	128.0	163.0	55	50	70
350 x 150	6.3	47.9	61.0	140	110	165
	8.0	60.3	76.8	110	85	130
	10.0	74.5	94.9	90	70	105
	12.5	91.9	117.0	75	55	85
	14.2	103.0	132.0	65	50	75
	16.0	115.0	147.0	60	45	70

Table 24 - Section factor A/V (Hp/A) of rectangular hollow sections

Rectangular hollow sections

Dimensions to *EN 10210 S355J2H*

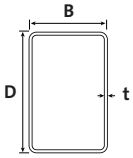

Designation		Mass per	Area of	Section factor A/V (Hp/A)		
				Box		
				3 sides		4 sides
Size D x B	Thickness t mm	metre kg	section cm²	m⁻¹	m⁻¹	m⁻¹
350 x 250	6.3	57.8	73.6	130	115	165
	8.0	72.8	92.8	105	95	130
	10.0	90.2	115.0	85	75	105
	12.5	112.0	142.0	70	60	85
	14.2	126.0	160.0	60	55	75
	16.0	141.0	179.0	55	50	70
400 x 120	6.3	49.9	63.5	145	100	165
	8.0	62.8	80.0	115	80	130
	10.0	77.7	98.9	95	65	105
	12.5	95.8	122.0	75	55	85
	14.2	108.0	137.0	70	50	80
	16.0	120.0	153.0	65	45	70
400 x 150	6.3	52.8	67.3	145	105	165
	8.0	66.5	84.8	115	85	130
	10.0	82.4	105.0	90	70	105
	12.5	102.0	130.0	75	55	85
	14.2	115.0	146.0	65	50	75
	16.0	128.0	163.0	60	45	70
400 x 200	6.3	57.8	73.6	140	110	165
	8.0	72.8	92.8	110	90	130
	10.0	90.2	115.0	90	70	105
	12.5	112.0	142.0	70	60	85
	14.2	126.0	160.0	65	50	75
	16.0	141.0	179.0	60	45	70
400 x 300	8.0	85.4	109.0	105	95	130
	10.0	106.0	135.0	85	75	105
	12.5	131.0	167.0	70	60	85
	14.2	148.0	189.0	60	55	75
	16.0	166.0	211.0	55	50	70
450 x 250	8.0	85.4	109.0	105	90	130
	10.0	106.0	135.0	85	70	105
	12.5	131.0	167.0	70	60	85
	14.2	148.0	189.0	65	50	75
	16.0	166.0	211.0	55	45	70
500 x 200	8.0	85.4	109.0	110	85	130
	10.0	106.0	135.0	90	70	105
	12.5	131.0	167.0	75	55	85
	14.2	148.0	189.0	65	50	75
	16.0	166.0	211.0	60	45	70
500 x 300	8.0	97.9	125.0	105	90	130
	10.0	122.0	155.0	85	75	105
	12.5	151.0	192.0	70	60	85
	14.2	170.0	217.0	60	50	75
	16.0	191.0	243.0	55	45	70
	20.0	235.0	300.0	45	40	55

FireCase A/V (Hp/A) tables

Lining selection

To determine the thickness of cladding required, the designer should follow the procedure below:

1. Find out what period of fire resistance is needed.
2. Ascertain whether protection is required on 3 or 4 sides of the section.
3. Determine which critical temperature is to be used (usually 550°C).
4. Determine if the performance standard required is BS or EN.
5. Refer to **Tables 5 - 24** for the relevant steel size. Locate the steel section to be protected, listed by its size and mass per metre, and read off the section factor A/V.
6. Refer to **Tables A - L** for the relevant A/V (Hp/A). Locate the A/V value on the vertical scale. Read across the chart to the column relating to the period of fire resistance required and read off the designated thickness of Glasroc F FIRECASE cladding required to form the encasement.

For castellated sections and cellular beams, please refer to the Association for Specialist Fire Protection (ASFP) publication 'Fire protection for structural steel in buildings - 4th edition, for guidance.

NB Tables A and B are the main performance tables (based on 550°C to *BS 476: Part 20: 1987*) to be used unless advised otherwise by a structural engineer.

System references	D120001 (screw-fixed system) D120002 (staple-fixed system)

BS

Table A

The 550°C chart to *BS 476: Part 21: 1987* is the main performance table used for selecting Glasroc F FIRECASE lining thicknesses.

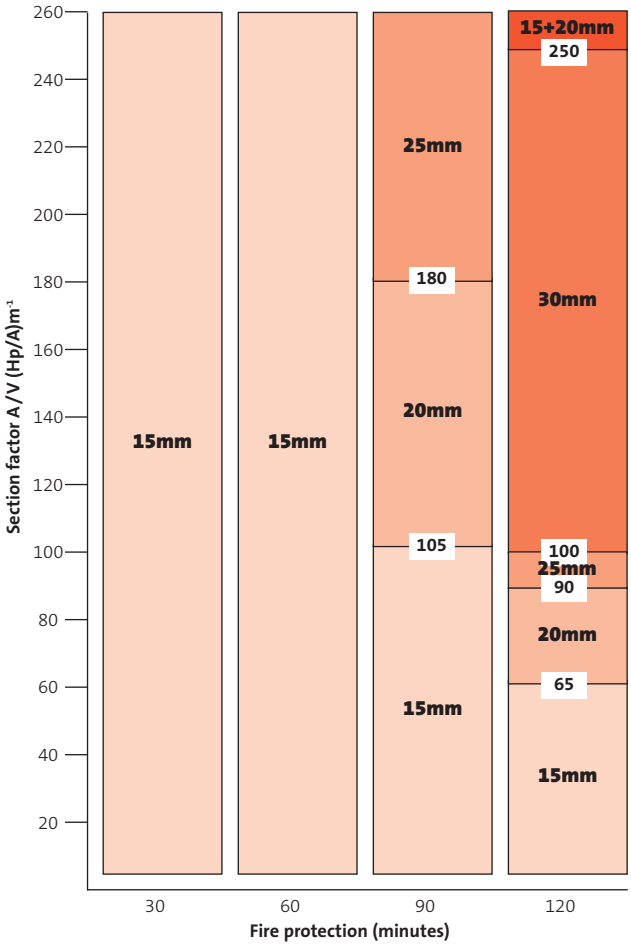

BS

Table B

The 550°C chart to *BS 476: Part 21: 1987* can be used for selecting cladding Glasroc F FIRECASE lining thickness for columns requiring 180 minutes fire protection using the **GypLyner ENCASE** system.

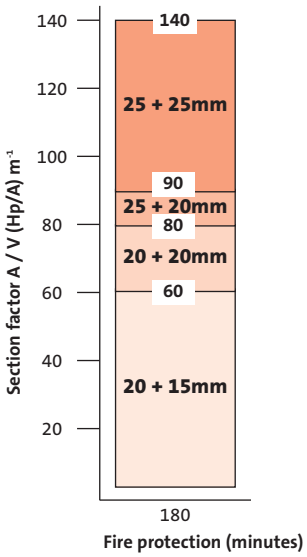

Table C

The 550°C chart to *ENV 13381-4: 2002* can be used for selecting Glasroc F FIRECASE lining thicknesses for four-sided columns when performances are required to the new European standards.

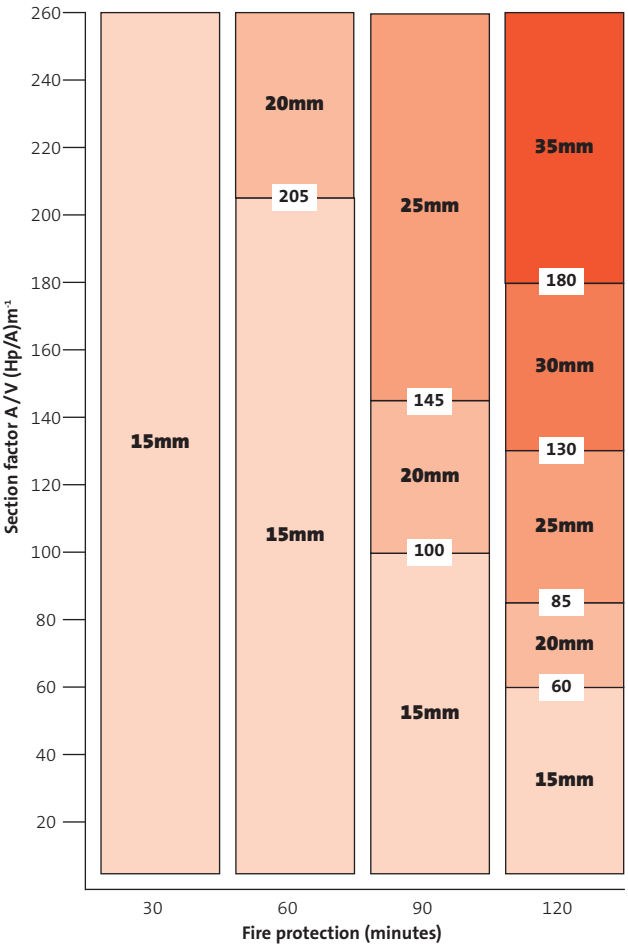

Table D

The 620°C chart to *BS 476: Part 21: 1987* is a performance table that can be used for selecting Glasroc F FIRECASE lining thicknesses for beams supporting concrete slabs.

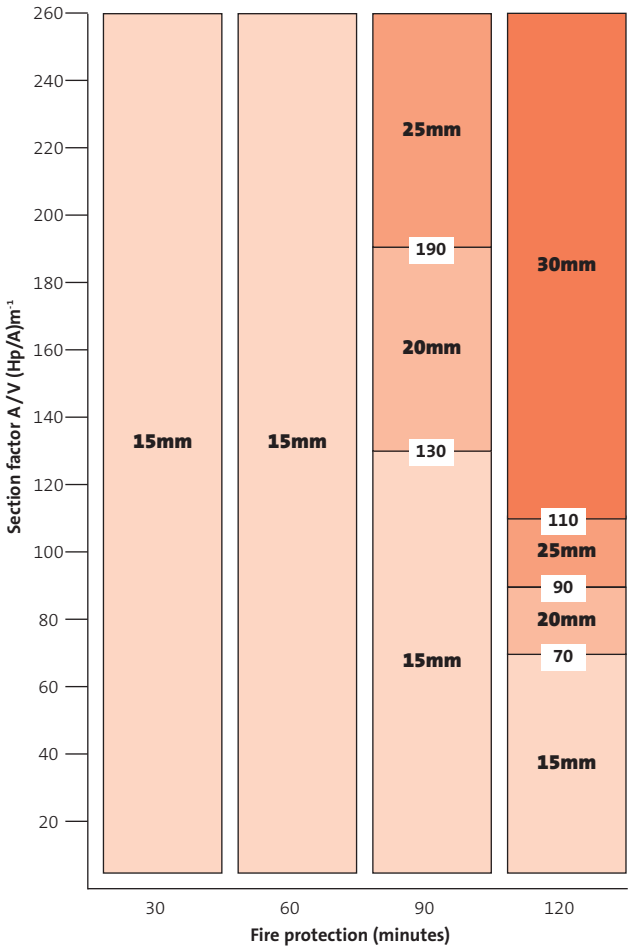

NB Tables A and B on page 49 are the main performance tables (based on 550°C to *BS 476: Part 21: 1987*) to be used unless advised otherwise by a structural engineer.

Table E

The 400°C chart to *BS 476: Part 21: 1987.*

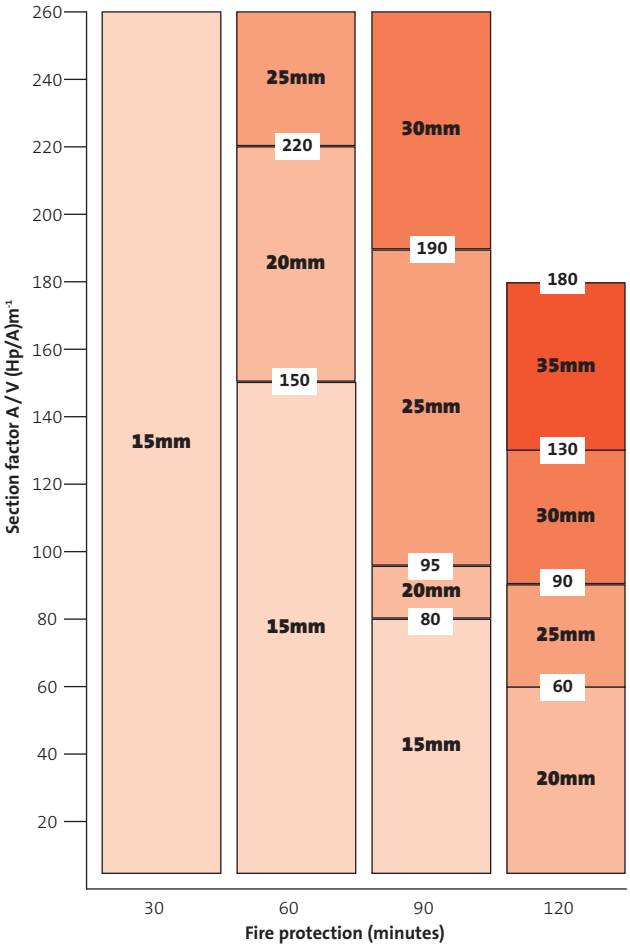

Table F

The 400°C chart to *ENV 13381-4: 2002* can be used for selecting Glasroc F FIRECASE lining thicknesses for four-sided columns when performances are required to the new European standards.

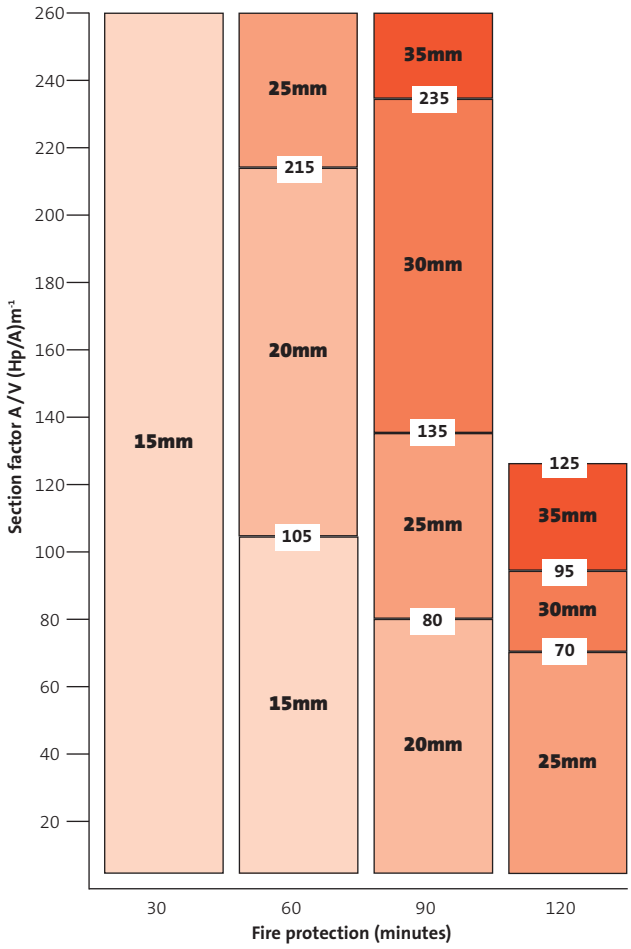

NB Tables A and B on page 49 are the main performance tables (based on 550°C to *BS 476: Part 21: 1987*) to be used unless advised otherwise by a structural engineer.

Table G

The 450°C chart to *BS 476: Part 21: 1987.*

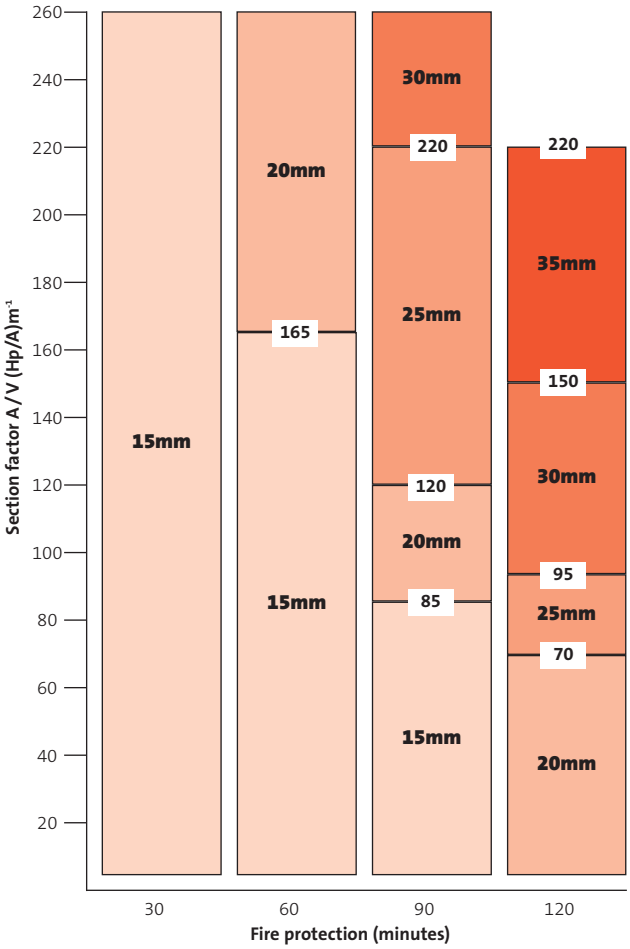

Table H

The 450°C chart to *ENV 13381-4: 2002* can be used for selecting Glasroc F FIRECASE lining thicknesses for four-sided columns when performances are required to the new European standards.

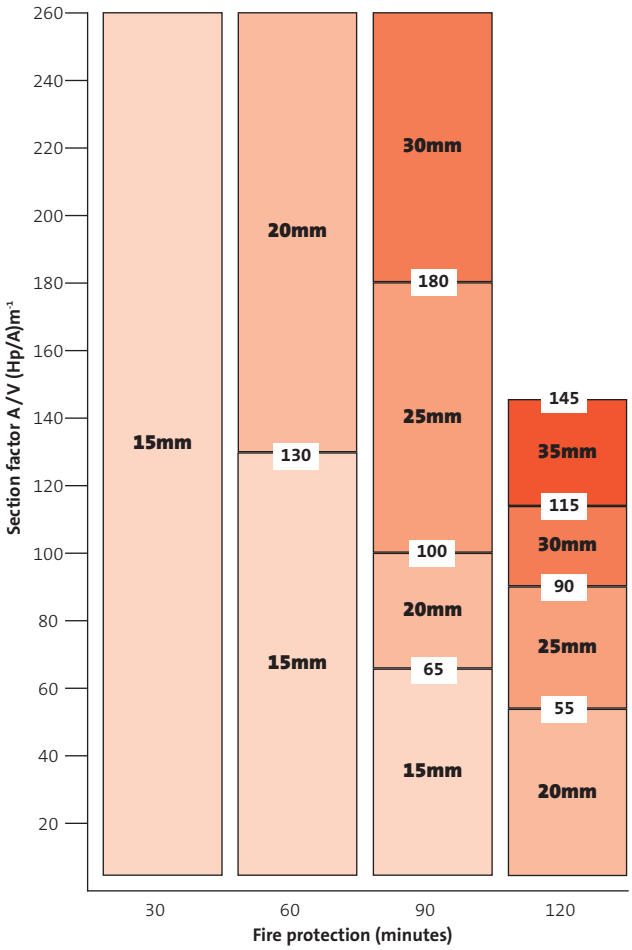

NB Tables A and B on page 49 are the main performance tables (based on 550°C to *BS 476: Part 21: 1987*) to be used unless advised otherwise by a structural engineer.

Table I

The 500°C chart to *BS 476: Part 21: 1987.*

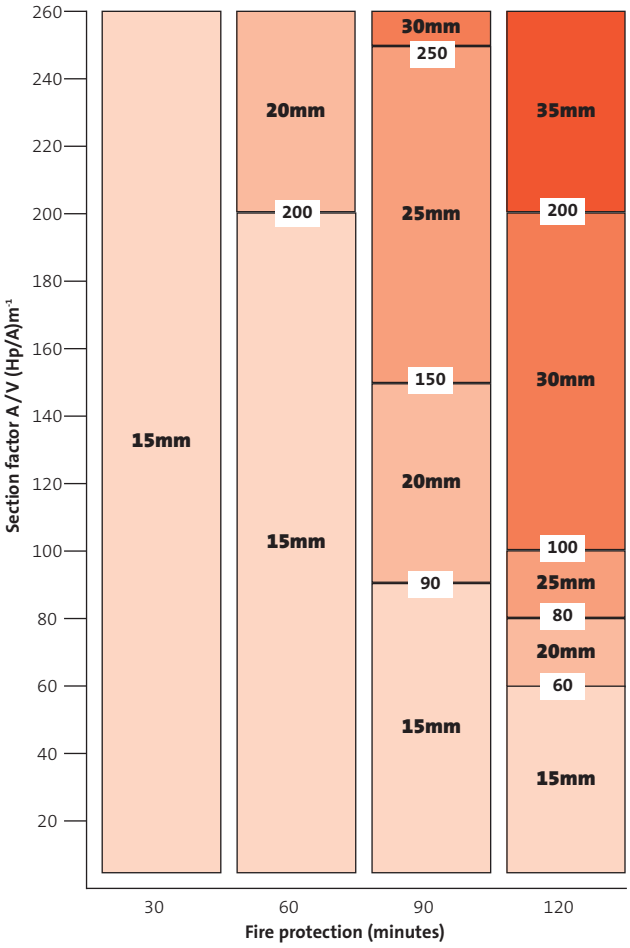

Table J

The 500°C chart to *ENV 13381-4: 2002* can be used for selecting Glasroc F FIRECASE lining thicknesses for four-sided columns when performances are required to the new European standards.

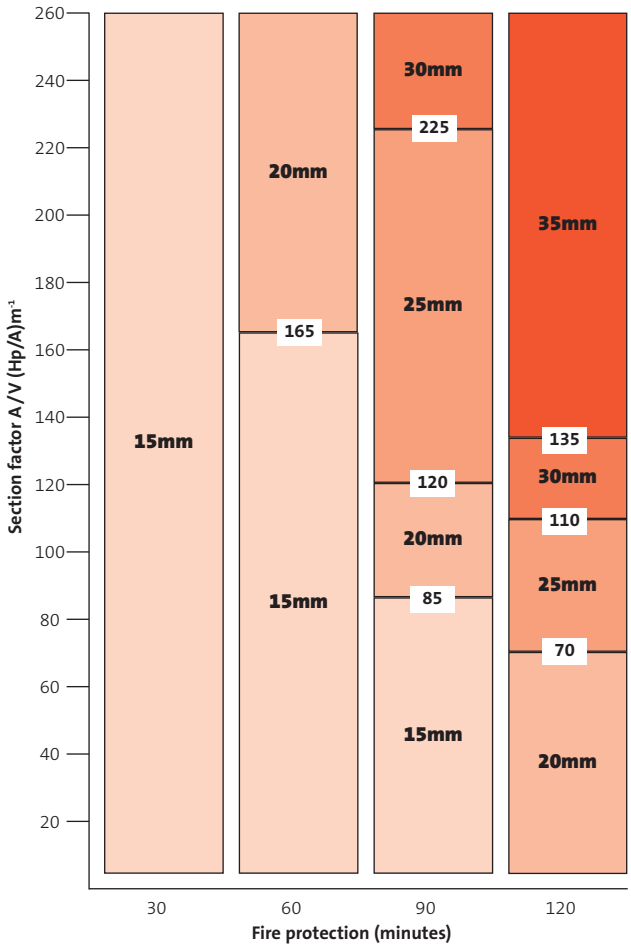

NB Tables A and B on page 49 are the main performance tables (based on 550°C to *BS 476: Part 21: 1987*) to be used unless advised otherwise by a structural engineer.

Table K

The 700°C chart to *BS 476: Part 21: 1987.*

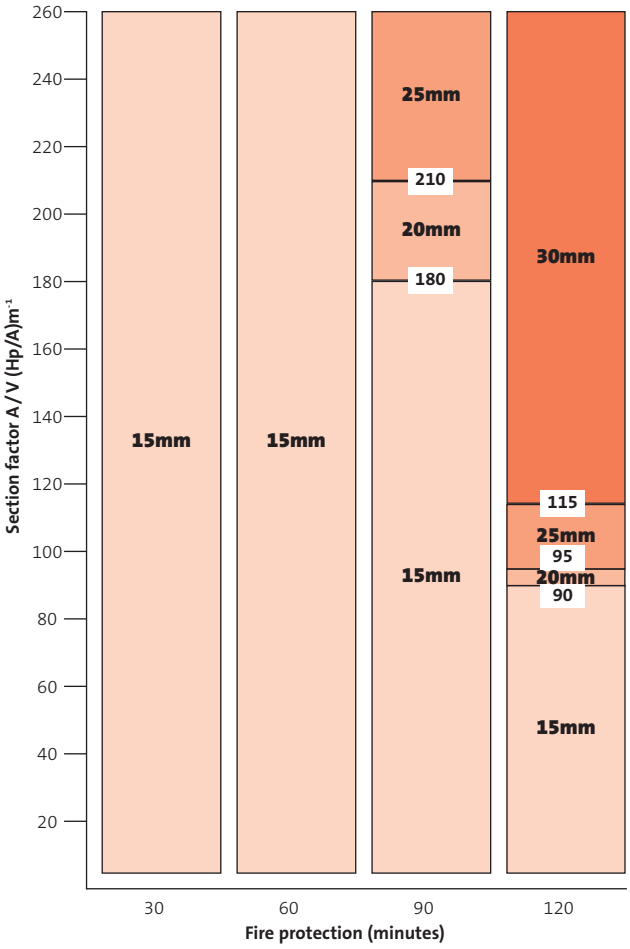

Table L

The 700°C chart to *ENV 13381-4: 2002* can be used for selecting Glasroc F FIRECASE lining thicknesses for four-sided columns when performances are required to the new European standards.

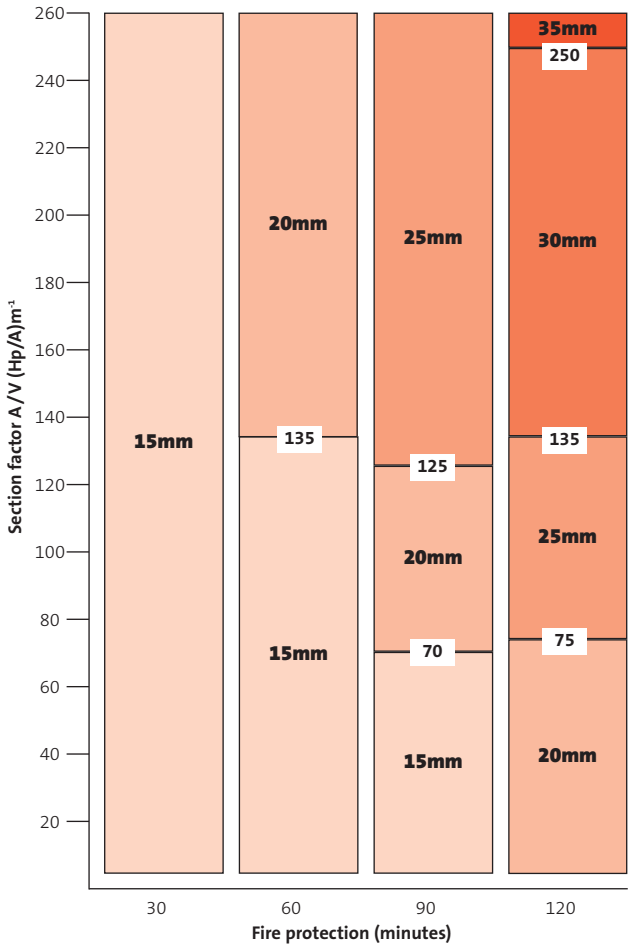

NB Tables A and B on page 49 are the main performance tables (based on 550°C to *BS 476: Part 21: 1987*) to be used unless advised otherwise by a structural engineer.

Construction details – 4-sided column encasement

1 Four-sided column encasement for up to 120 minutes fire protection

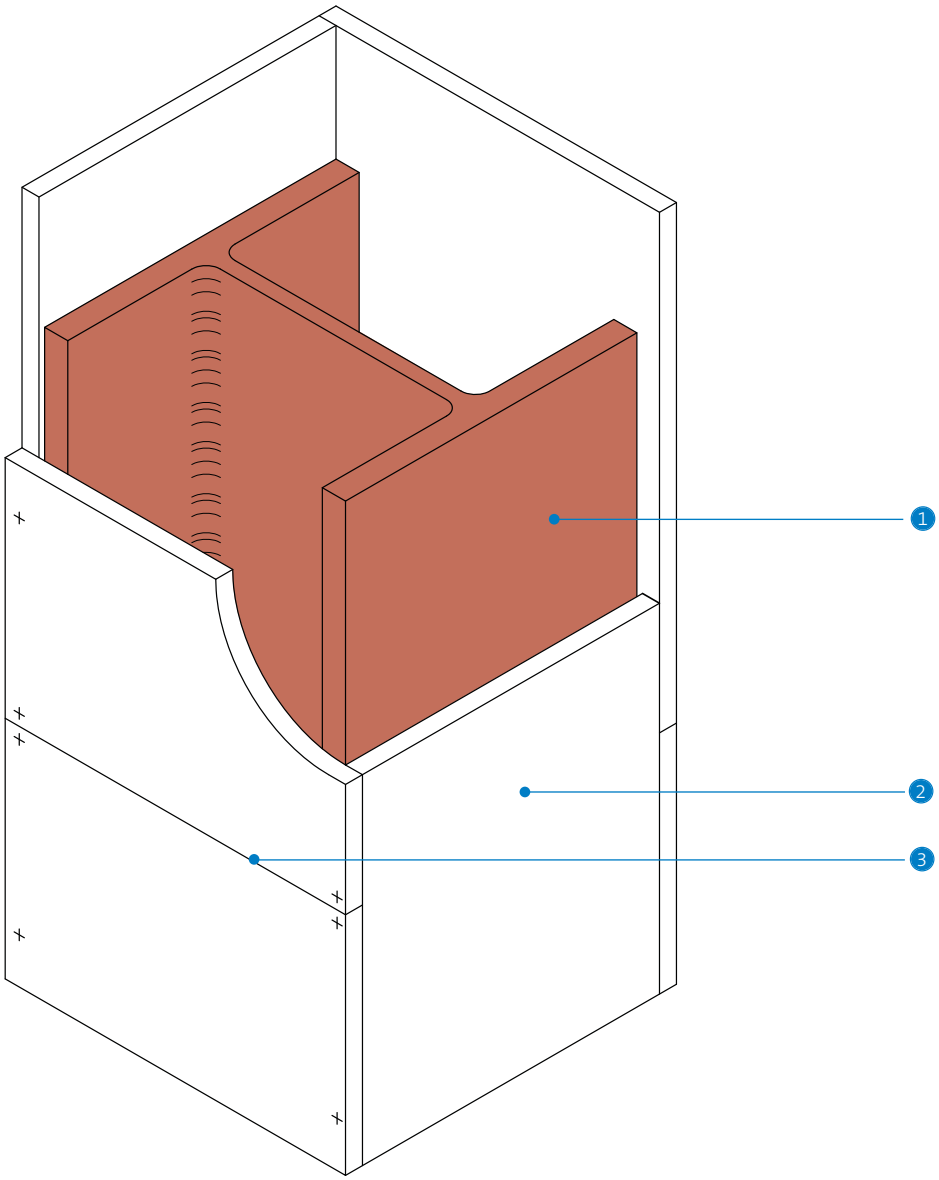

1. Steel column
2. Glasroc F FIRECASE fixed together with Glasroc F FIRECASE Screws or Glasroc Staples at 150mm centres
3. Board joints staggered by minimum 600mm between adjacent sides

Construction details – 3-sided column encasement

2 Three-sided column encasement incorporating steel angles for up to 120 minutes fire protection

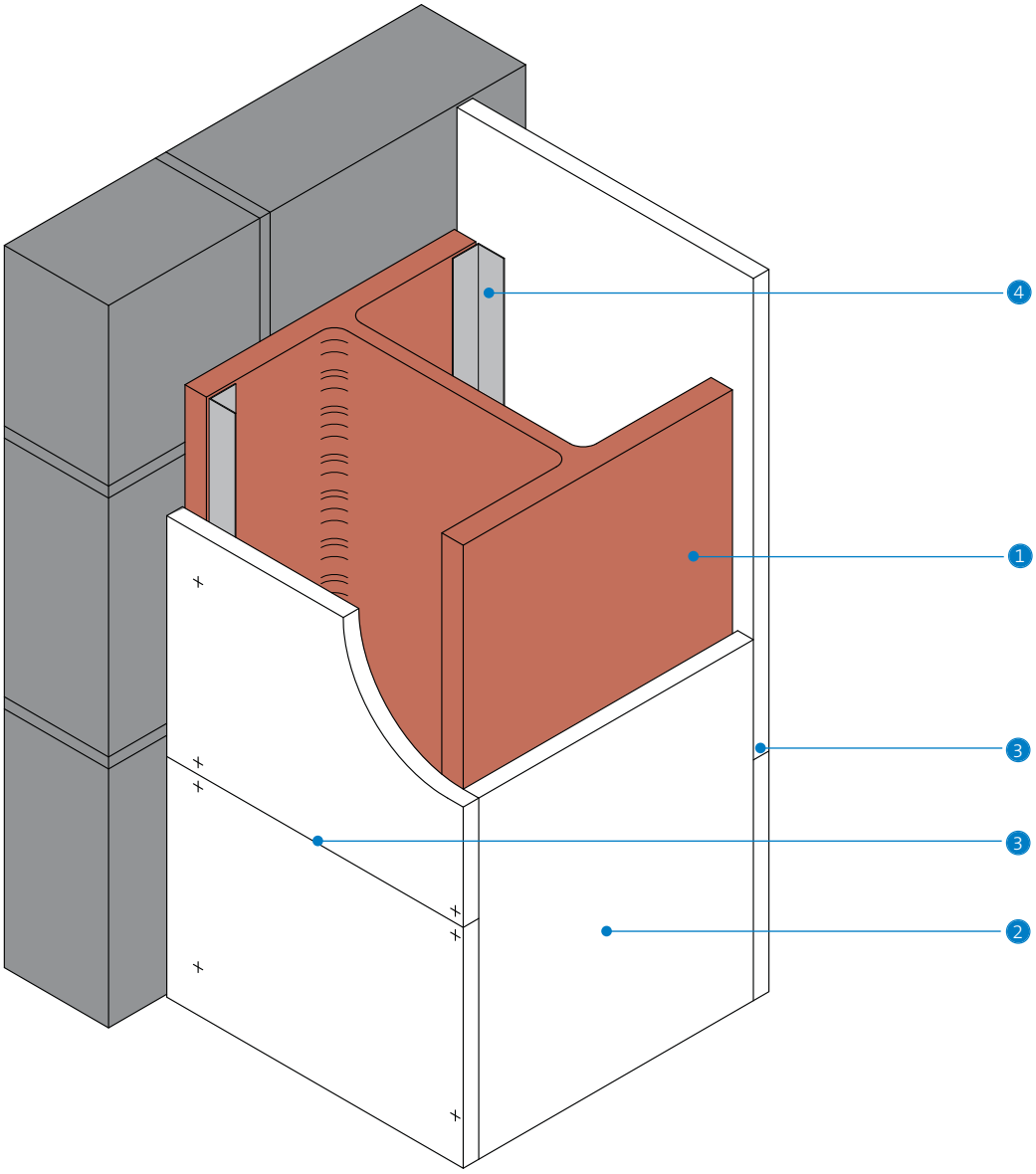

1. Steel column
2. Glasroc F FIRECASE fixed together with Glasroc F FIRECASE Screws or Glasroc Staples at 150mm centres
3. Board joints staggered by minimum 600mm between adjacent sides
4. Gypframe GA1 Steel Angle suitably fixed to column flange at 600mm centres

Construction details – 3-sided column encasement

3 Three-sided column encasement incorporating Glasroc F FIRECASE soldiers for up to 90 minutes fire protection

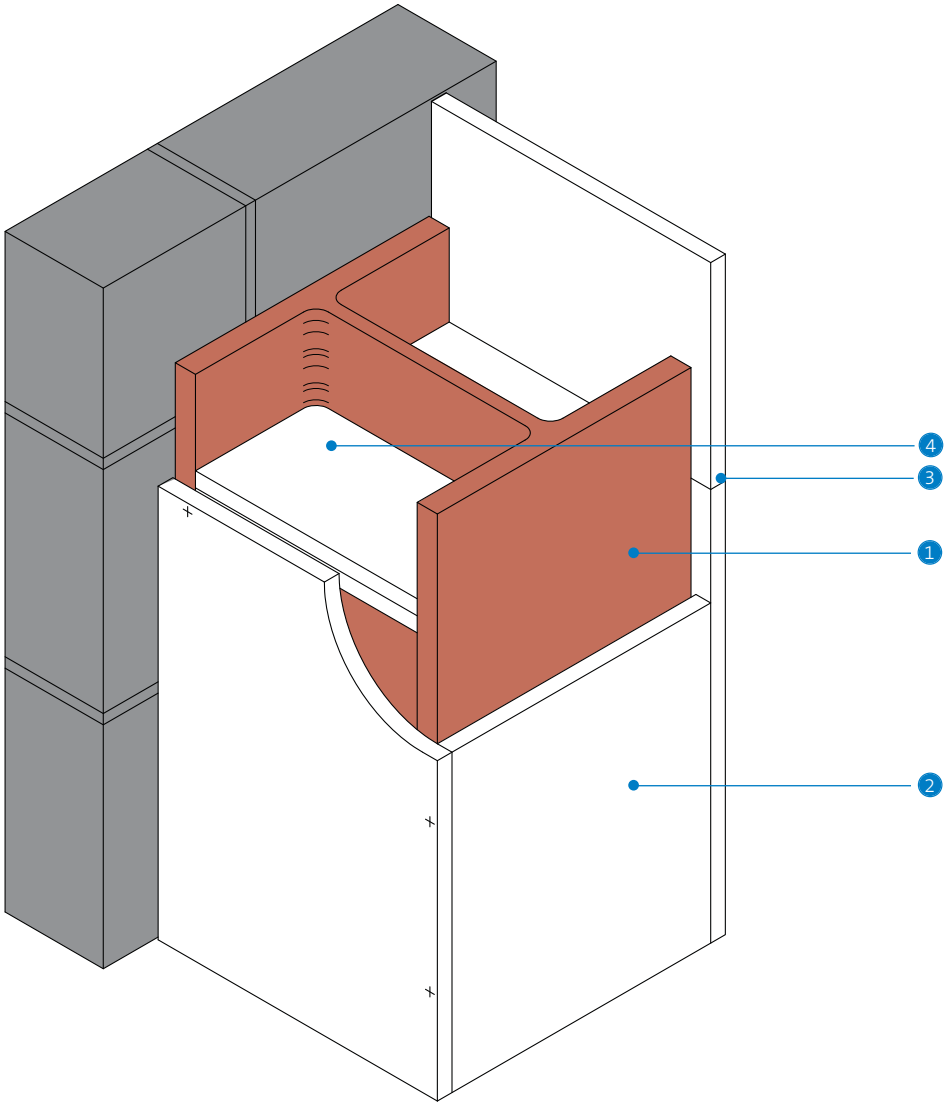

1. Steel column
2. Glasroc F FIRECASE fixed together with Glasroc F FIRECASE Screws or Glasroc Staples at 150mm centres
3. Board joints staggered by minimum 600mm between adjacent sides
4. Glasroc F FIRECASE soldiers at 1200mm centres (2 together at board joints)

Construction details – 3-sided beam encasement

4 Three-sided beam encasement incorporating steel angles for up to 120 minutes fire protection

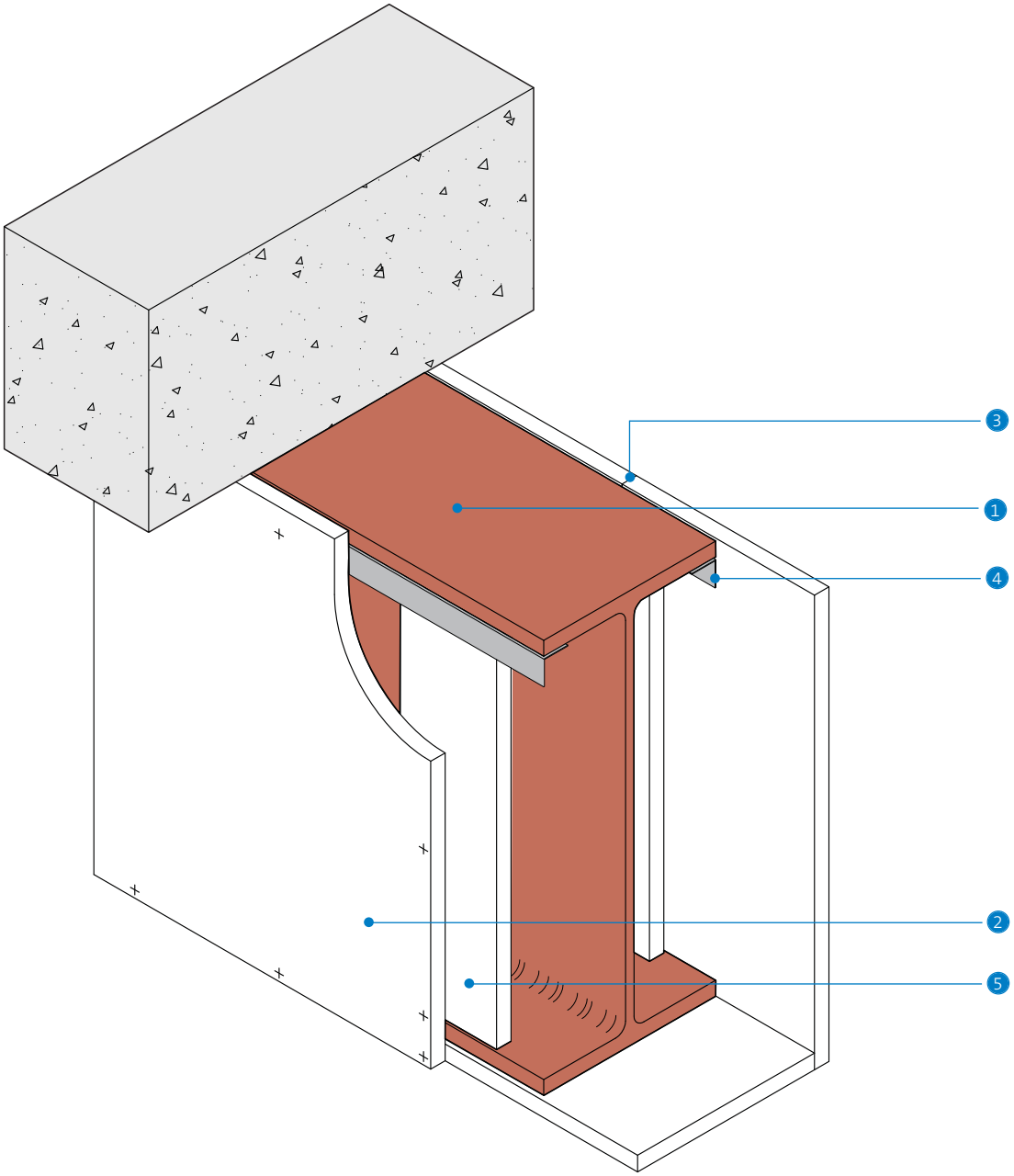

1. Steel beam
2. Glasroc F FIRECASE fixed together and to Gypframe GA1 Steel Angle with Glasroc F FIRECASE Screws at 150mm centres
3. Board joints staggered by minimum 600mm between adjacent sides
4. Gypframe GA1 Steel Angle suitably fixed to beam flange at 600mm centres
5. 60mm wide Glasroc F FIRECASE backing strip

Construction details – 3-sided beam encasement

5 Three-sided beam encasement incorporating Glasroc F FIRECASE soldiers for up to 90 minutes fire protection

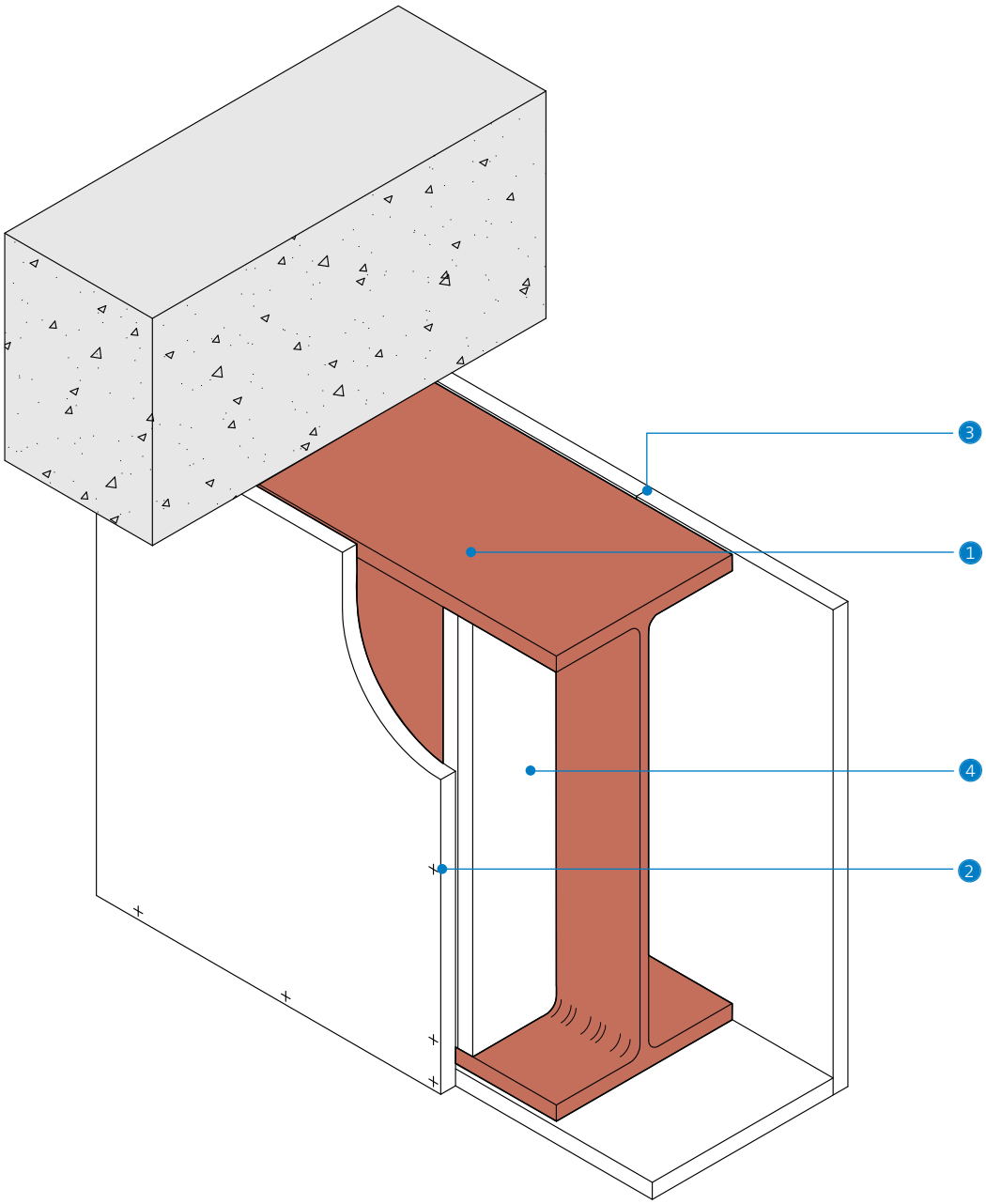

1. Steel beam
2. Glasroc F FIRECASE fixed together and to soldiers with Glasroc F FIRECASE Screws or Glasroc Staples at 150mm centres
3. Board joints staggered by minimum 600mm between adjacent sides
4. Glasroc F FIRECASE soldiers at 1200mm centres (2 together at fascia board joints)

Construction details – column encasement and partition junction

6 Column encasement and partition junction up to 60 minutes fire resistance (for partitions with *BS 5234* light and medium duty, and no pressure requirements)

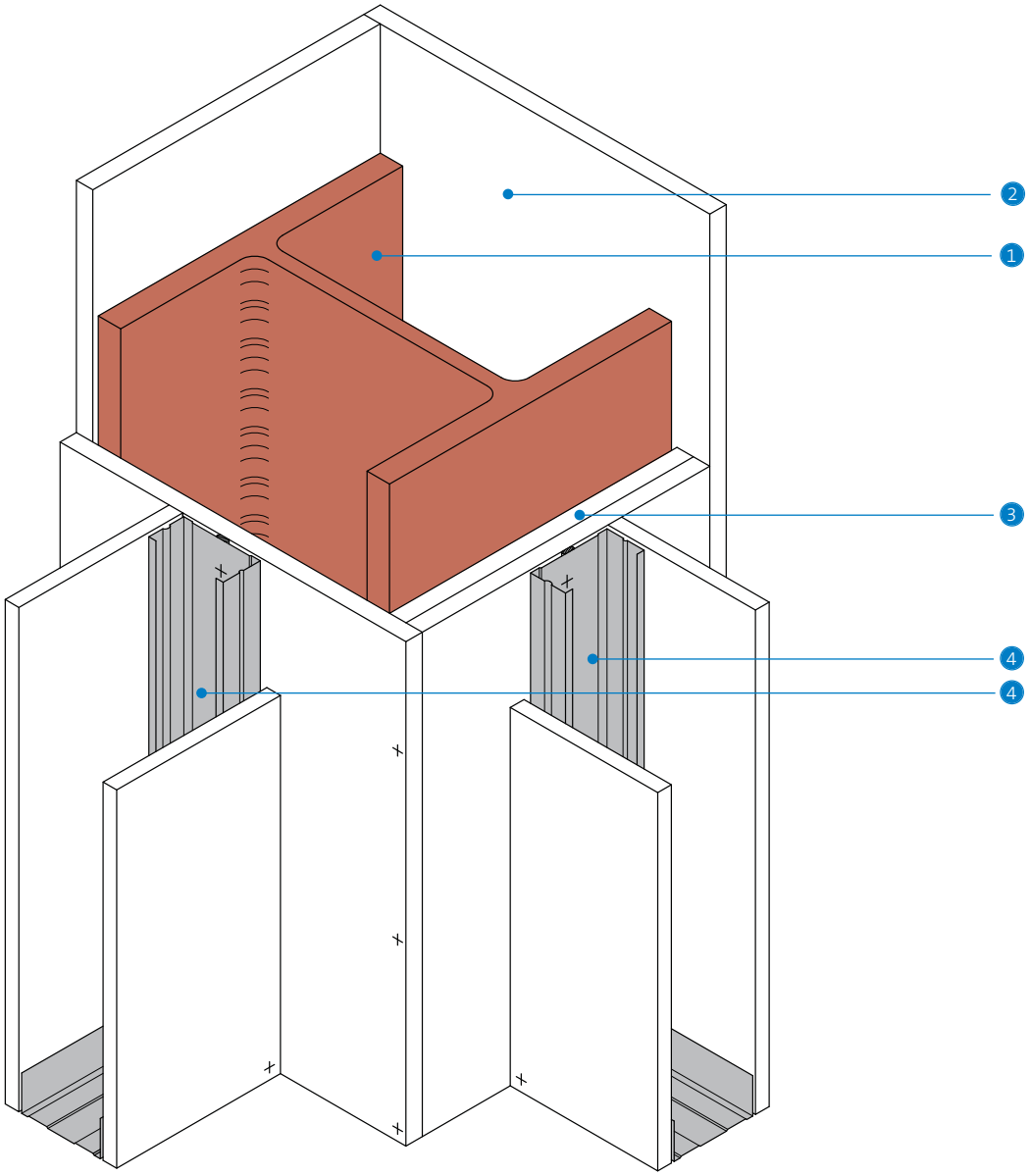

1. Steel column
2. **FireCase** column encasement
3. Addtional layer of Glasroc F FIRECASE forming packer to receive partition fixing
4. Gypframe 'C' Stud bonded to Glasroc F FIRECASE with continuous bead of Gyproc Sealant (2 beads for studs wider than 75mm) and fixed with Gyproc Drywall Screws at 600mm centres (in 2 lines staggered by 300mm for studs wider than 75mm). Allow 24 hours before boarding.

Construction details – column encasement and partition junction

7 Column encasement and partition junction up to 120 minutes fire resistance (for partitions with *BS 5234* Heavy and Severe Duty)

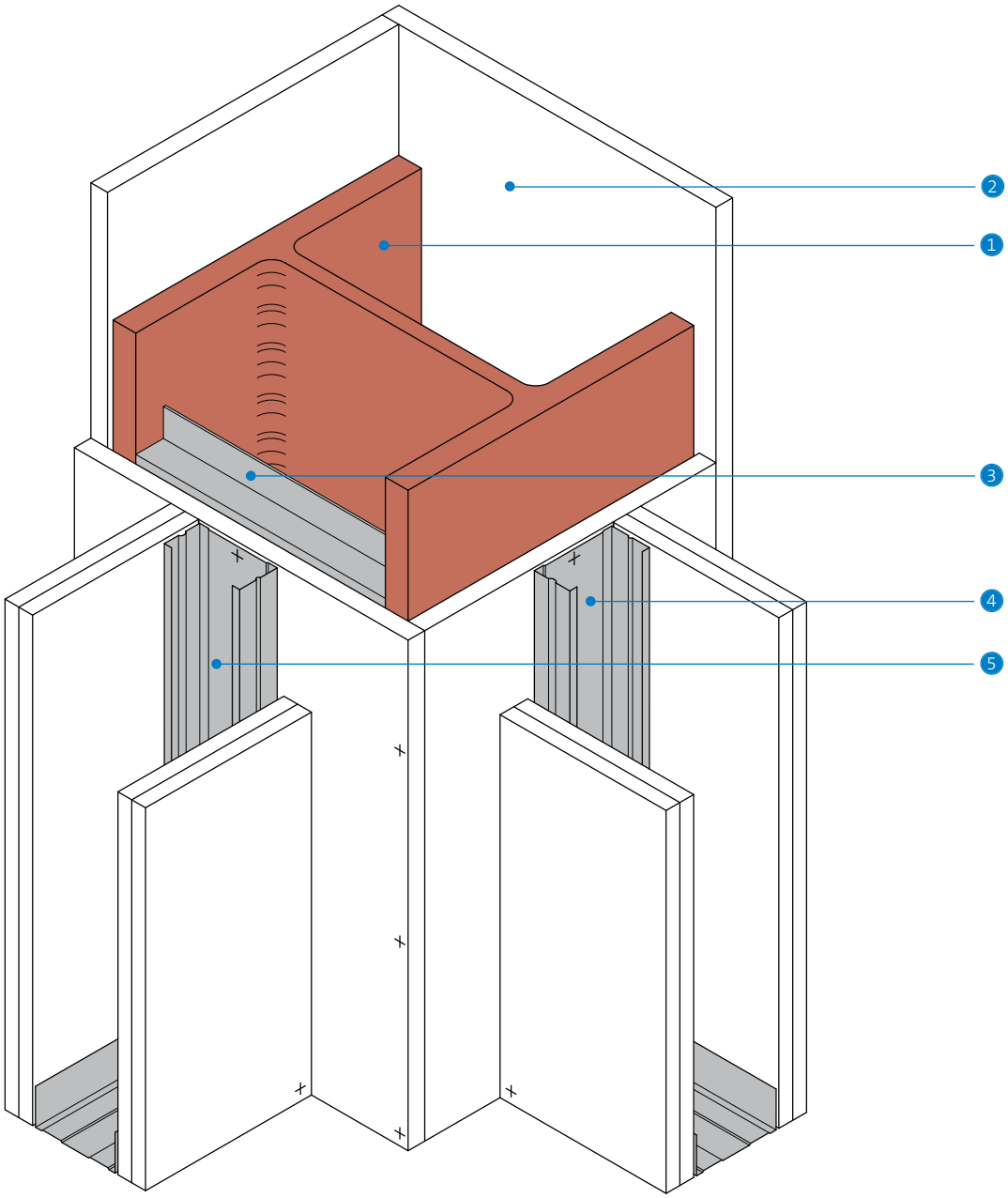

1. Steel column
2. **FireCase** column encasement
3. Suitable size Z section (by others) fixed between column flanges at 600mm centres
4. Gypframe 'C' Stud suitably fixed through Glasroc F FIRECASE to column at 600mm centres (in 2 lines staggered by 300mm for studs wider than 75mm)
5. Gypframe 'C' Stud suitably fixed through Glasroc F FIRECASE to Z sections (in 2 lines for studs wider than 75mm)

Construction details – beam encasement and partition junction

8 Beam encasement and partition junction up to 60 minutes fire resistance

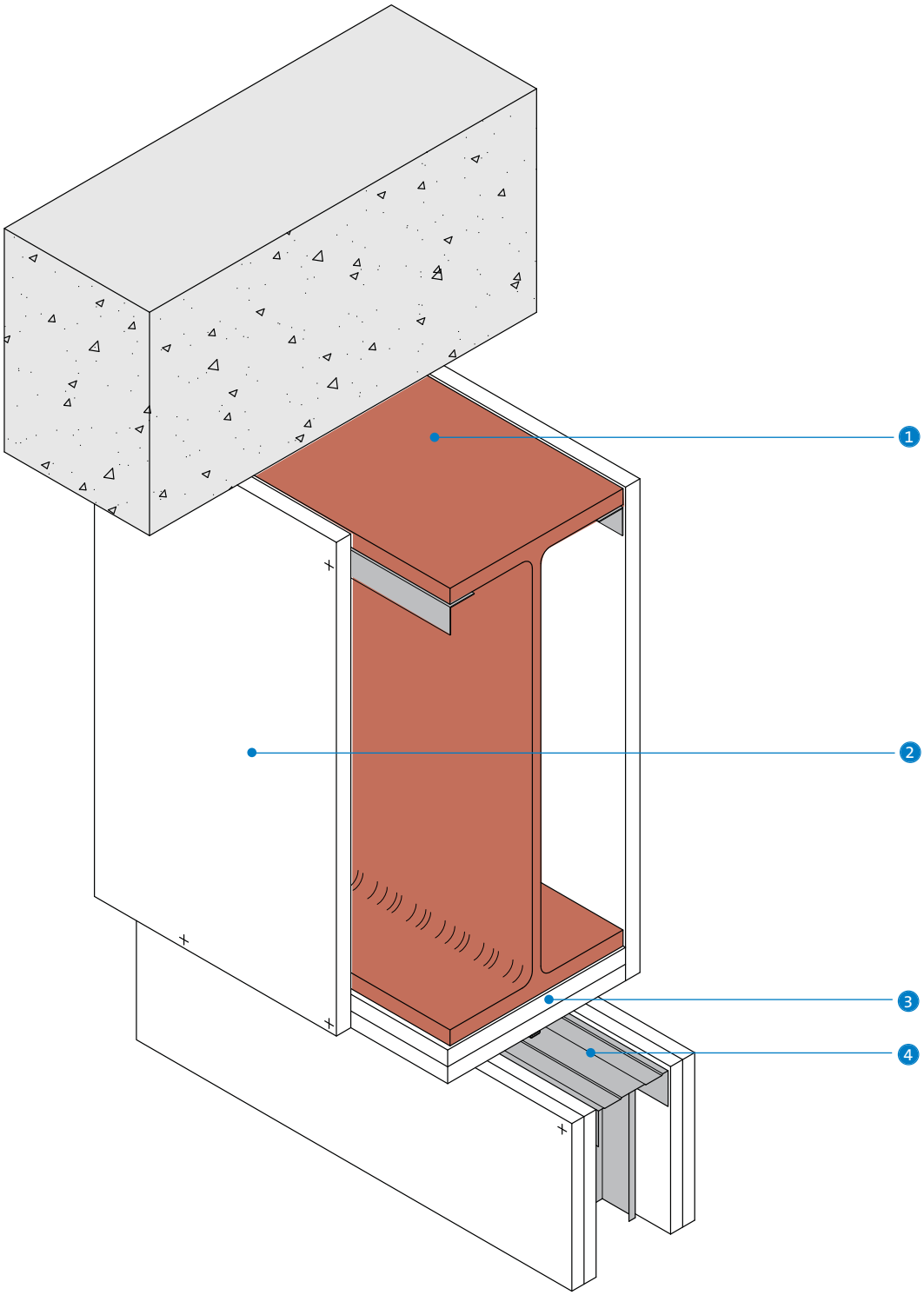

1. Steel beam
2. **FireCase** beam encasement
3. Additional layer of Glasroc F FIRECASE forming packer to receive partition fixing
4. Gypframe Channel bonded to Glasroc F FIRECASE with continuous bead of Gyproc Sealant (2 beads for channels wider than 75mm) and fixed with Gyproc Drywall Screws at 600mm centres (in 2 lines staggered by 300mm for studs wider than 75mm). Allow 24 hours before boarding partition.

Construction details – beam encasement and partition junction

9 Beam encasement and partition junction up to 120 minutes fire resistance

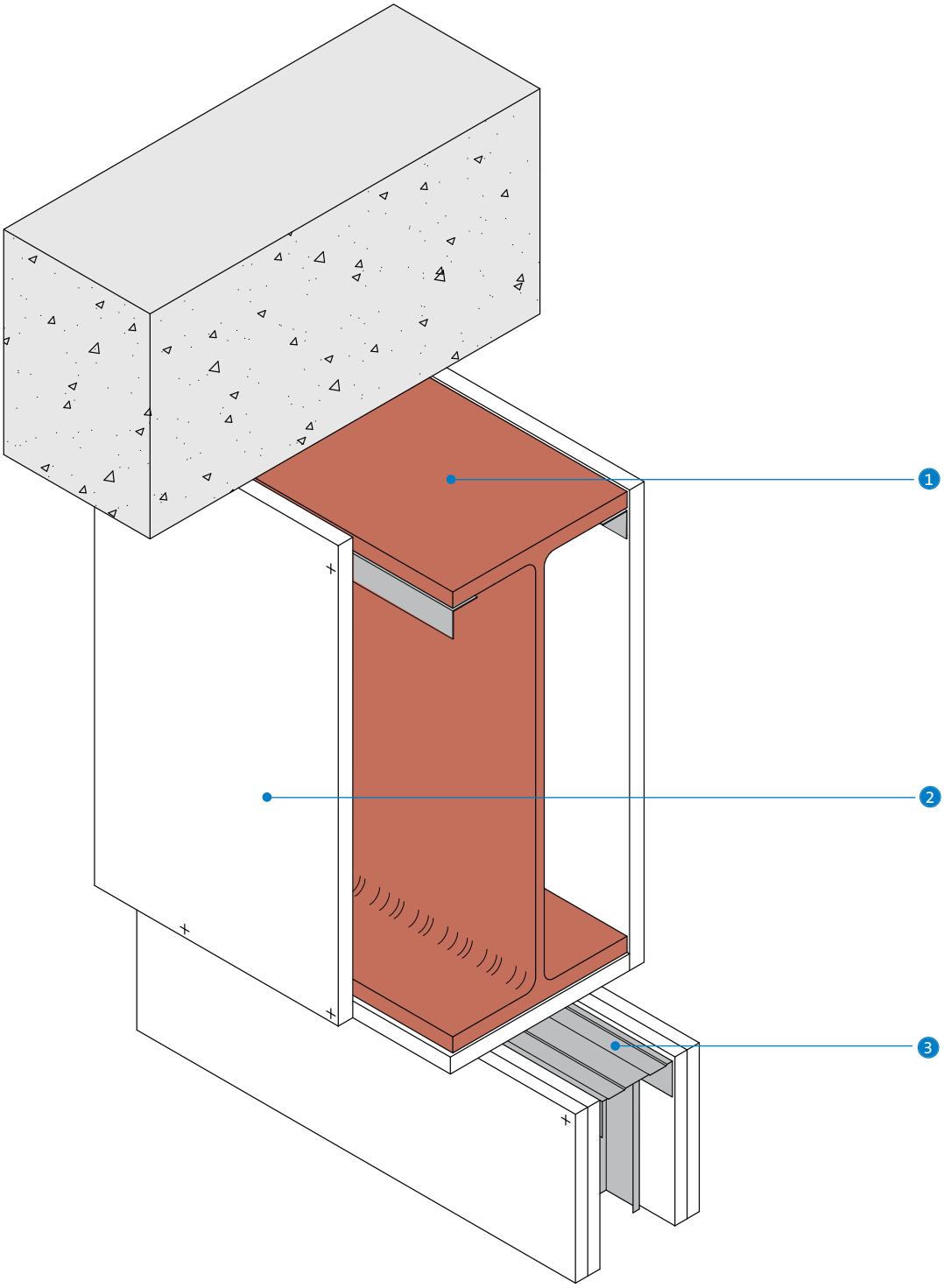

1. Steel beam
2. **FireCase** beam encasement
3. Gypframe Channel suitably fixed through Glasroc F FIRECASE to beam at 600mm centres (in 2 lines staggered by 300mm for channels wider than 75mm)

Construction details – column and beam encasement junction

10 Column and beam encasement junction

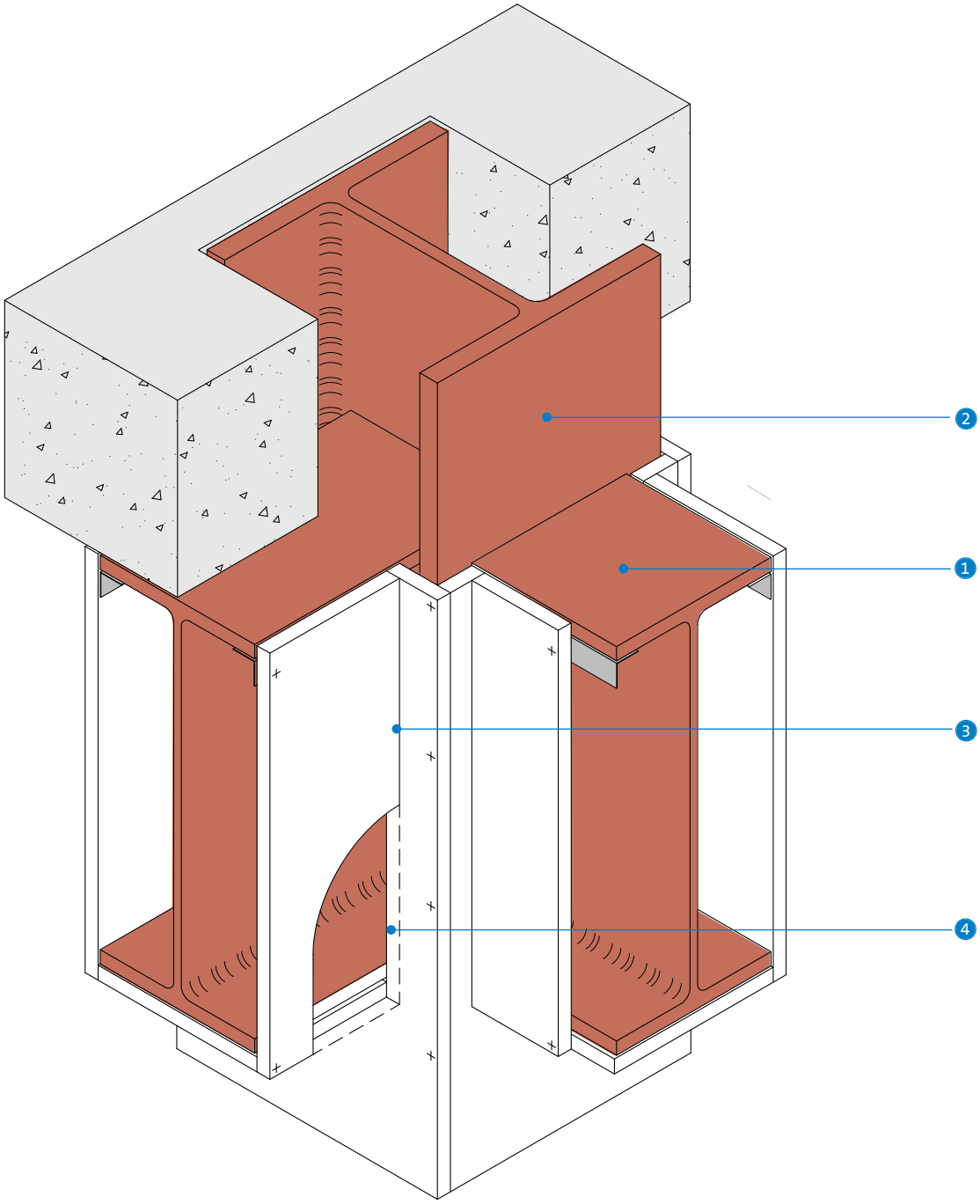

NB Where seating cleats create small gaps in column encasement below beam soffit, cloak with suitably sized strip of Glasroc F FIRECASE fixed to column encasement boards.

1. Steel beam
2. Steel column
3. Beam encasement boards butted tight to column encasement
4. Column encasement boards cut around penetrations

Construction details – three-sided beam encasement

11 Three-sided encasement for beam depths 600mm - 1200mm

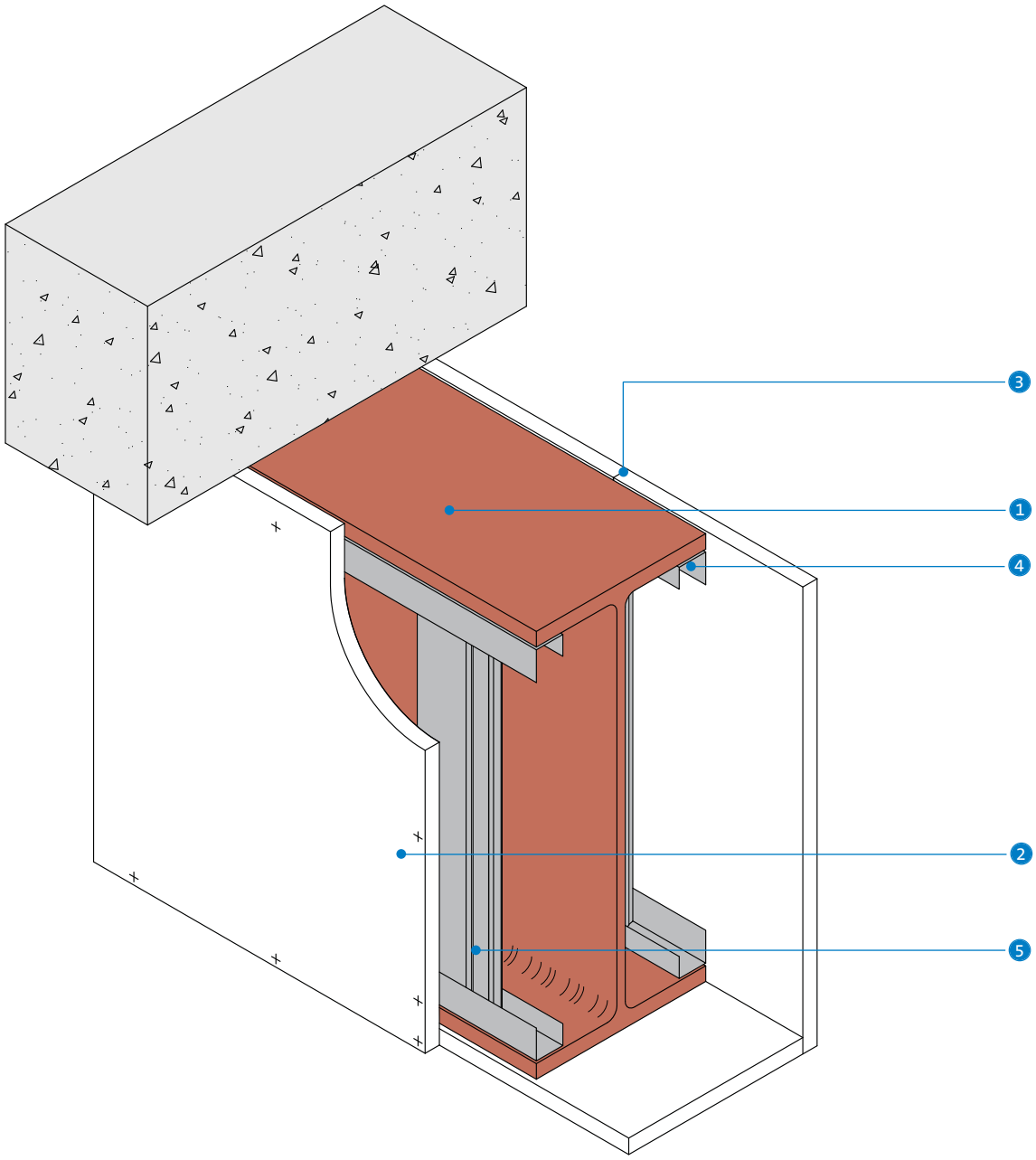

1. Steel beam
2. Glasroc F FIRECASE fixed together and to Gypframe MF5 Ceiling Section and Gypframe MF6 Perimeter Channel with Glasroc F FIRECASE Screws
3. Board joints staggered by minimum 600mm between adjacent sides
4. Gypframe MF6 Perimeter Channel suitably fixed to beam flange at 600mm centres
5. Gypframe MF5 Ceiling Section at 600mm centres and at board joints

Construction details – portal frame column and haunch encasement

12 Portal frame column and haunch encasement

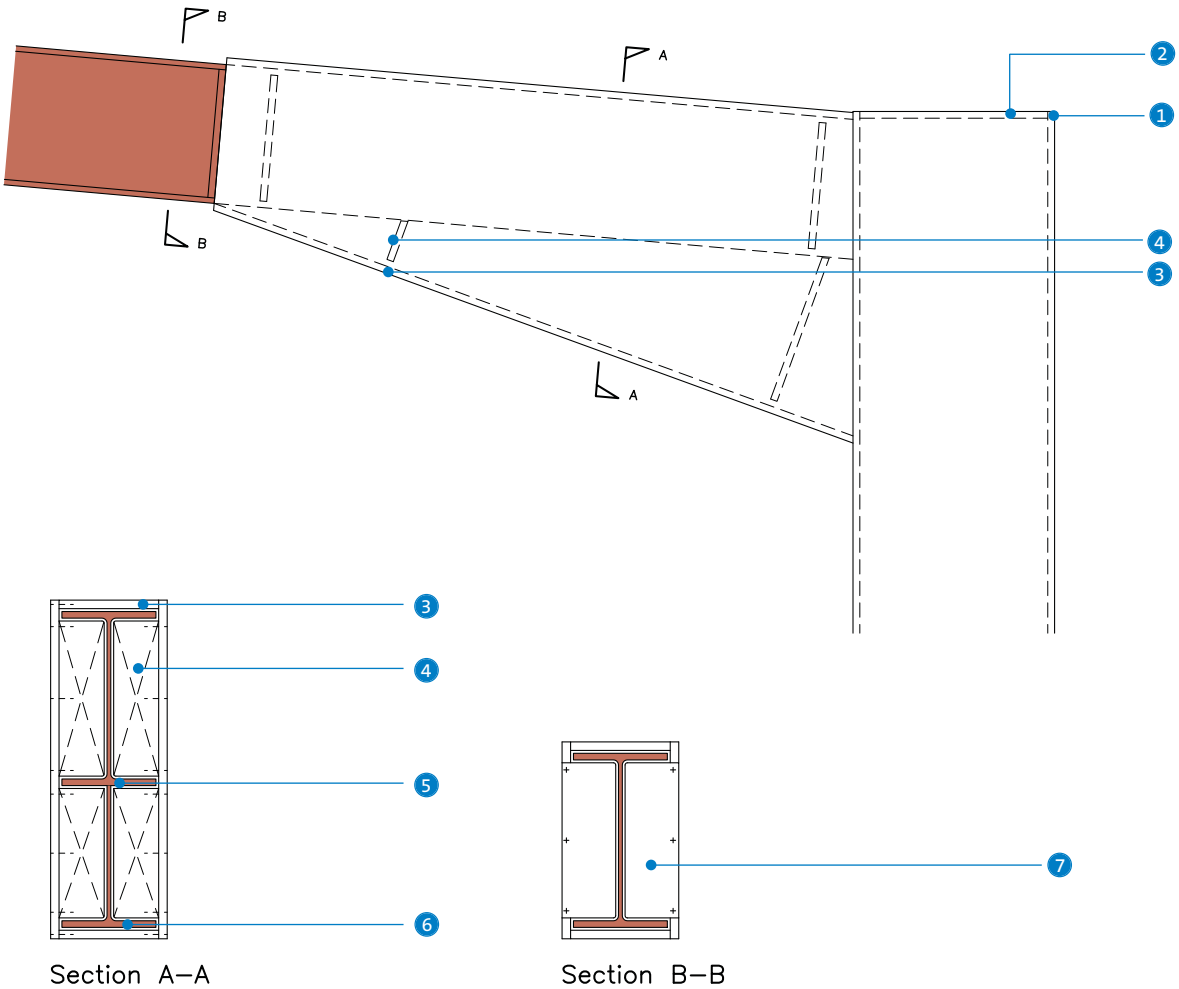

1. Column encasement boards to extend above top of steel column by thickness of Glasroc F FIRECASE
2. Glasroc F FIRECASE inserted into top of column encasement and fixed together with Glasroc F FIRECASE Screws or Glasroc Staples at 150mm centres
3. Glasroc F FIRECASE fixed together with Glasroc F FIRECASE Screws or Glasroc Staples at 150mm centres
4. Glasroc F FIRECASE soldiers at 1200mm centres
5. Portal rafter
6. Haunch
7. Glasroc F FIRECASE cut tight to portal rafter and fixed to end of encasement with Glasroc F FIRECASE Screws or Glasroc Staples at 150mm centres

Construction details – encasement of column within block wall

13 Column flange projection less than 30mm

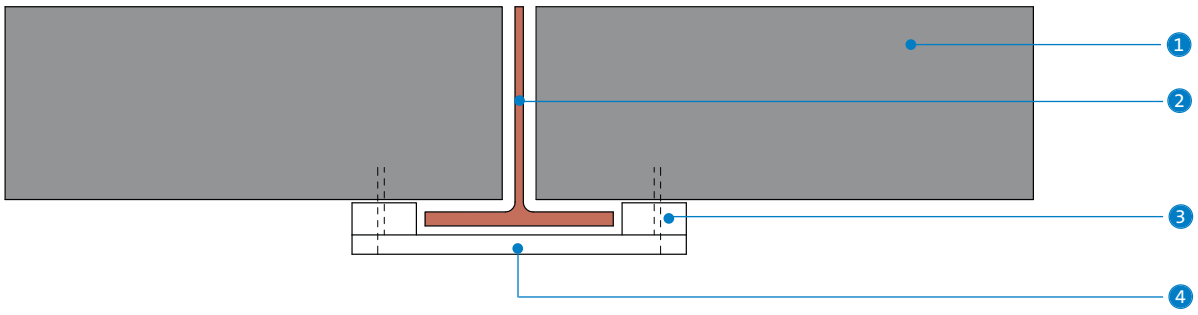

14 Column flange projection less than 30mm using steel angles

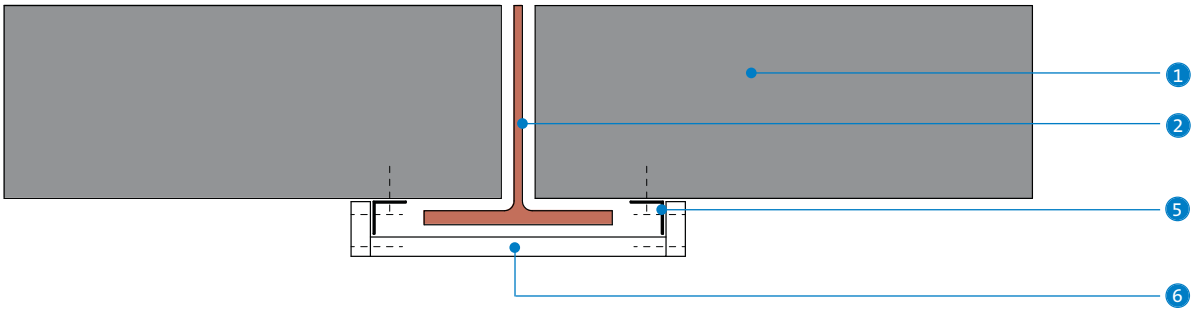

1. Blockwork
2. Steel column
3. Minimum 50mm wide strip of Glasroc F FIRECASE suitably fixed to blockwork at 1200mm centres
4. Glasroc F FIRECASE suitably fixed through packer to blockwork at 300mm centres
5. Gypframe GA1 Steel Angle suitably fixed to blockwork at 600mm centres
6. Glasroc F FIRECASE fixed together and to Gypframe GA1 Steel Angles with Glasroc F FIRECASE Screws at 150mm centres

NB Maximum encasement width 600mm.

Construction details – encasement of column within block wall

15 Column flange projection (fixed to column)

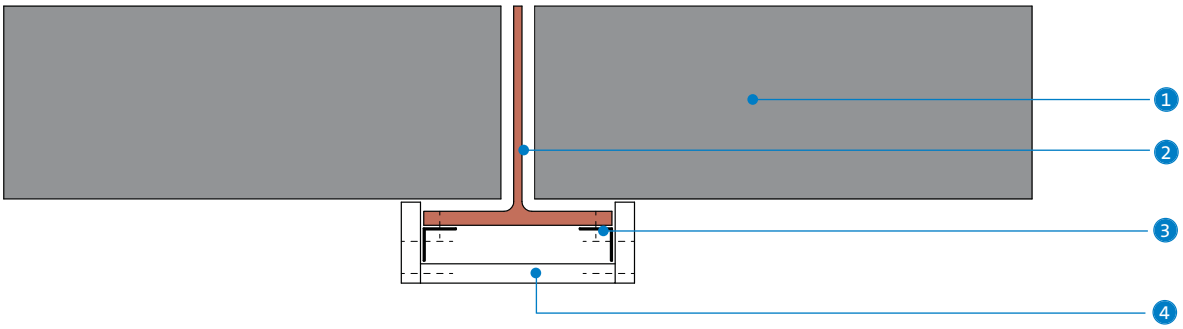

16 Column flange projection (fixed to blockwork)

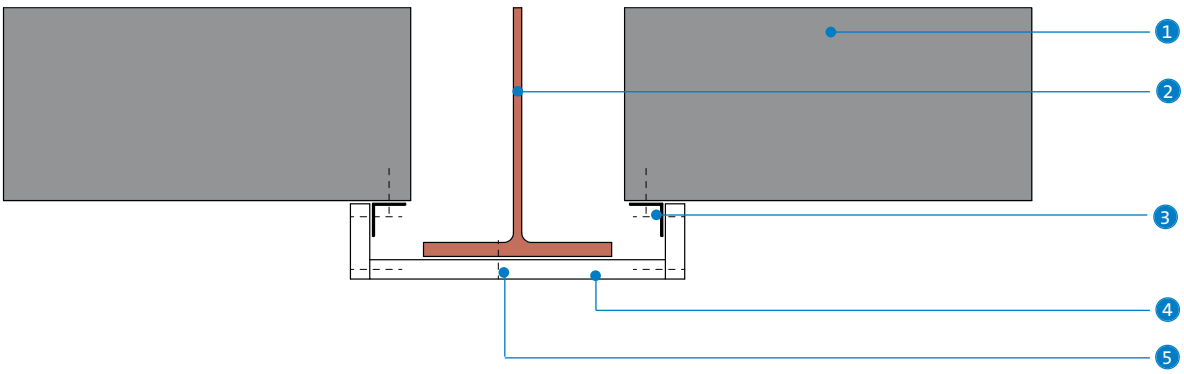

1. Blockwork
2. Steel column
3. Gypframe GA1 Steel Angle suitably fixed to column / blockwork at 600mm centres
4. Glasroc F FIRECASE suitably fixed together and to Gypframe GA1 Steel Angles with Glasroc F FIRECASE Screws at 150mm centres
5. Glasroc F FIRECASE fixed to column with mechanical steel pin fixings at 600mm centres

NB Maximum encasement width 600mm.

Construction details – encasement of column within block wall

17 Encasement flush with blockwork

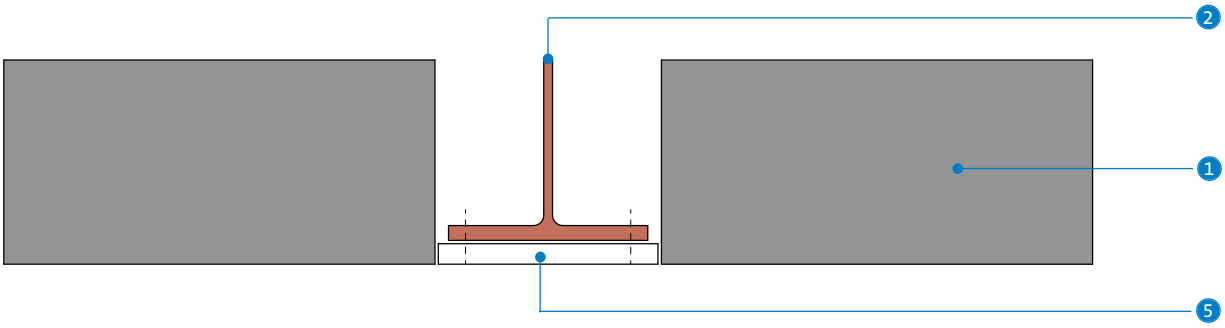

18 Encasement overlapping blockwork

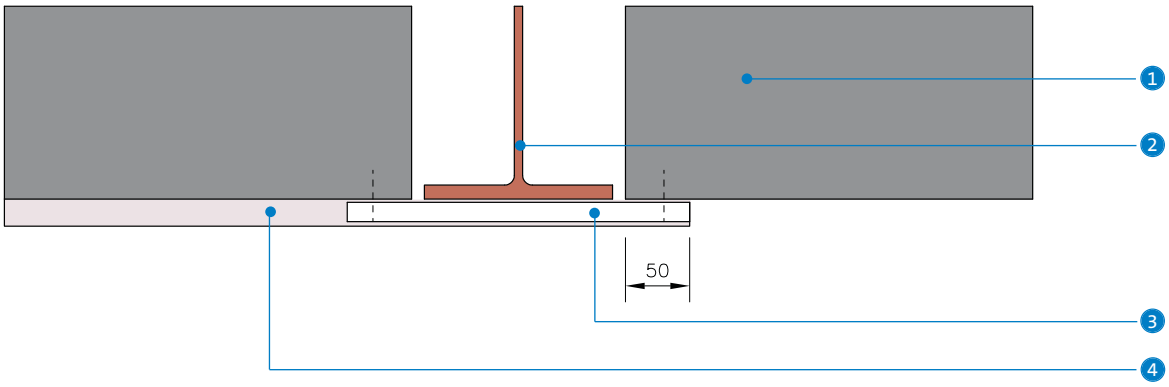

1. Blockwork
2. Steel column
3. Glasroc F FIRECASE suitably fixed to blockwork at 300mm centres
4. Optional plaster finish
5. Glasroc F FIRECASE fixed to column with mechanical steel pin fixings at 300mm centres, in 2 lines staggered by 150mm

NB Maximum encasement width 600mm.

NB Steel pins will sit slightly proud of the board surface.

Construction details – encasement of column within block wall

19 Encasement flush with blockwork for columns up to 350mm wide

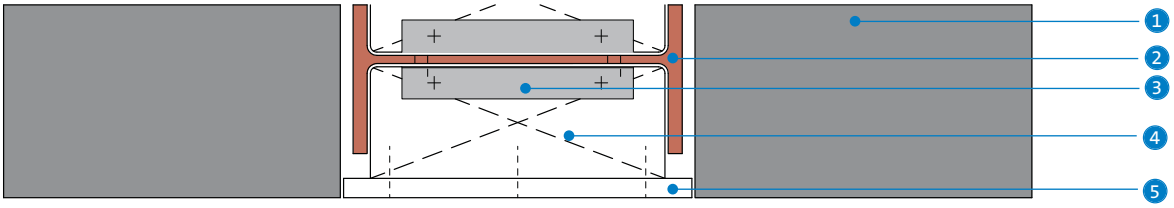

20 Encasement overlapping blockwork for columns up to 350mm wide

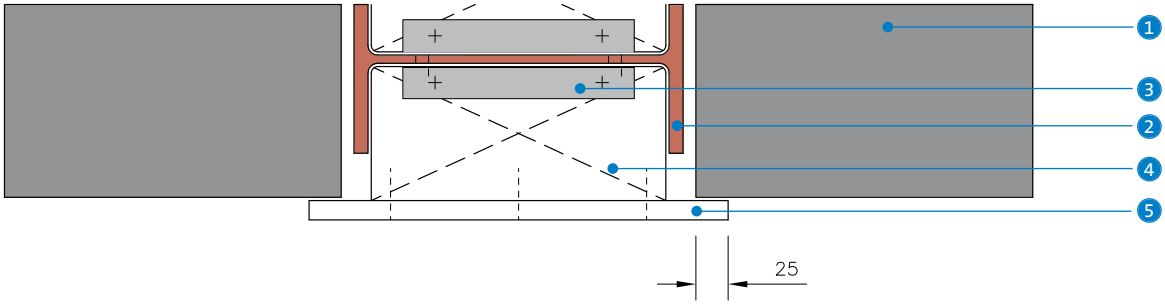

1. Blockwork
2. Steel column
3. Gypframe GA1 Steel Angle suitably fixed to column
4. Glasroc F FIRECASE soldiers at 1200mm centres (2 together at board joints) fixed to Gypframe GA1 Steel Angle with Glasroc F FIRECASE Screws
5. Glasroc F FIRECASE fixed to soldiers with Glasroc F FIRECASE Screws at 150mm centres

Construction details – encasement of column within block wall

21 Encasements flush with blockwork for columns 350mm to 600mm wide

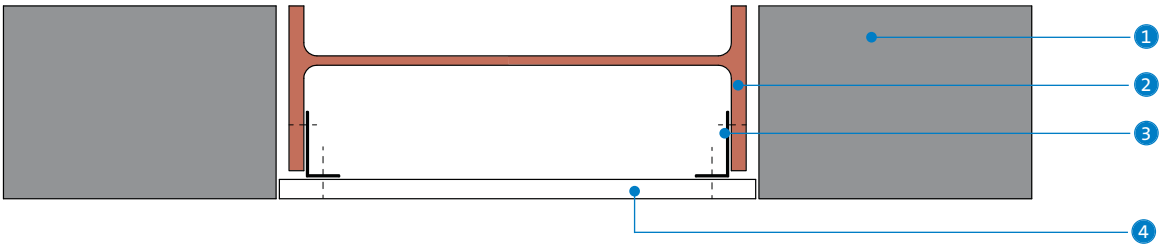

22 Encasement overlapping blockwork for columns 350mm to 600mm wide

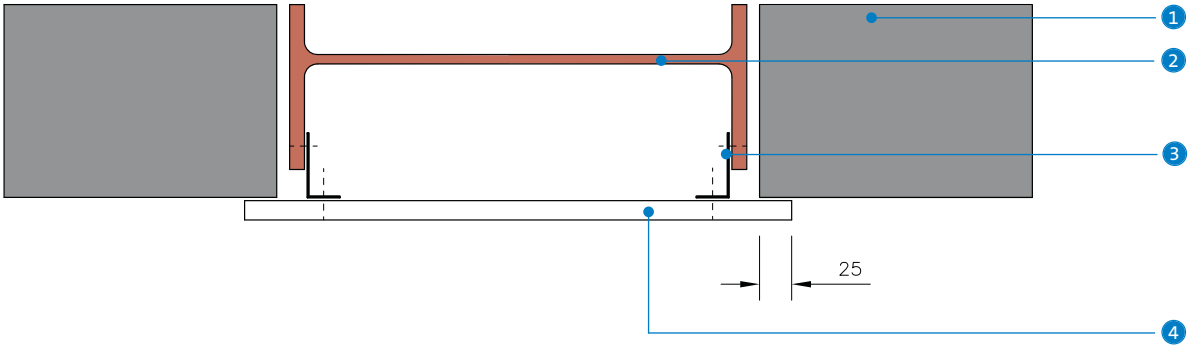

1. Blockwork
2. Steel column
3. Gypframe GA4 Steel Angle suitably fixed to column at 600mm centres
4. Glasroc F FIRECASE fixed to Gypframe GA4 Steel Angle with Glasroc F FIRECASE Screws at 150mm centres

Construction details – encasement of column within block wall

23 Column flange projection up to 600mm using steel angles

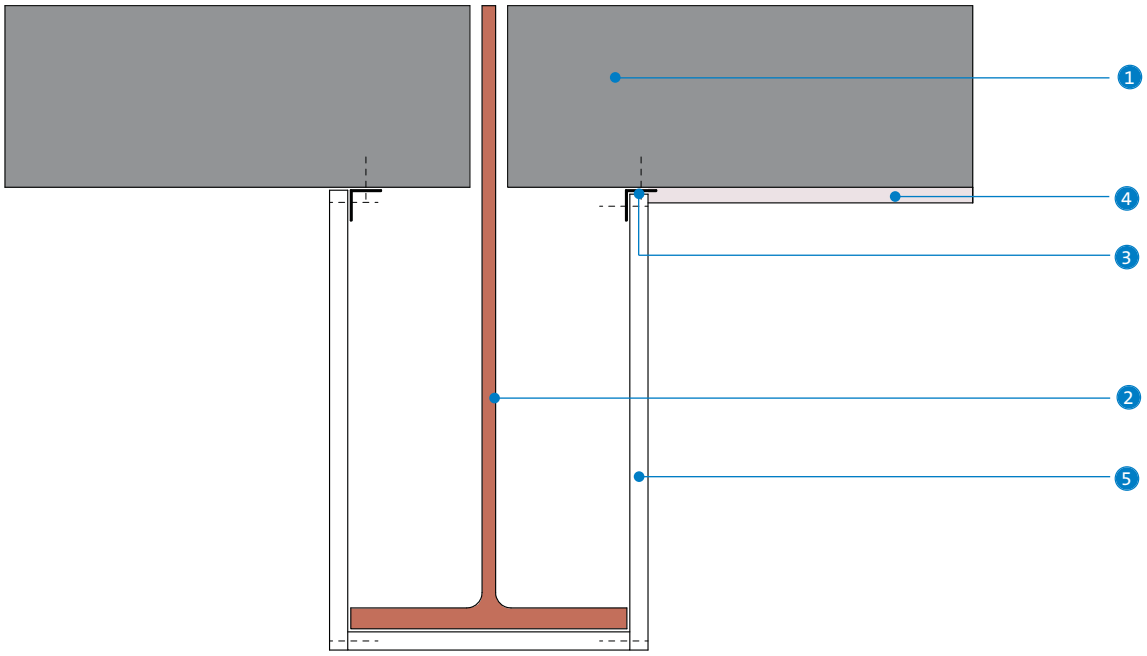

24 Column flange projection up to 600mm using Glasroc F FIRECASE soldiers

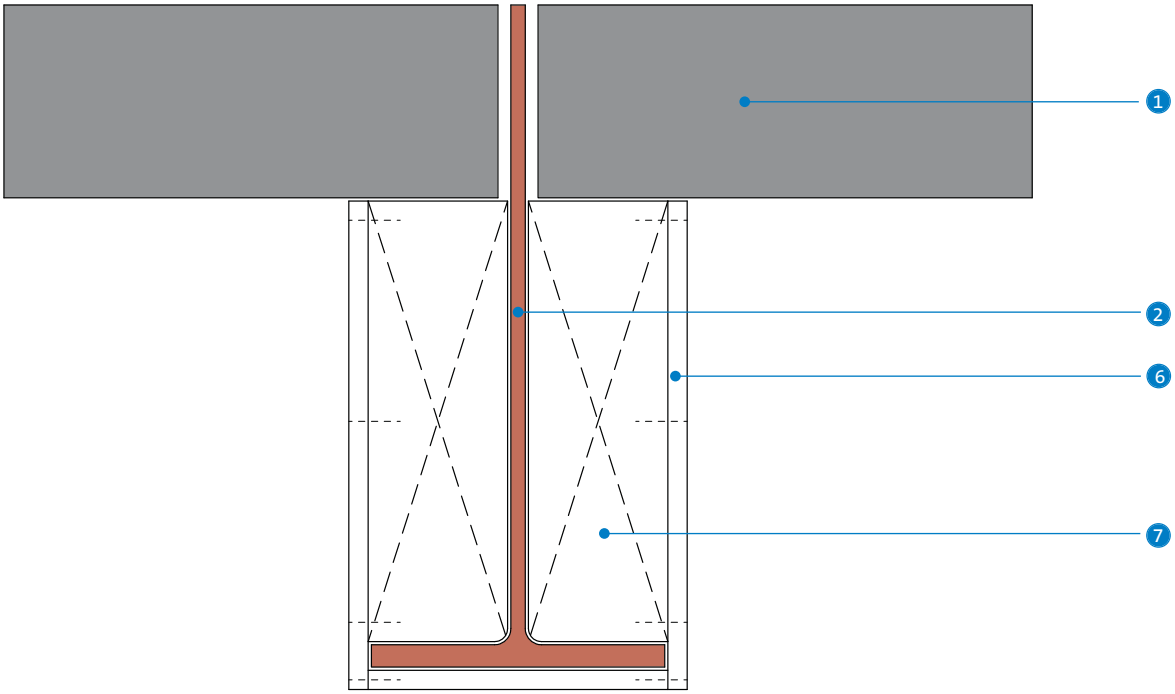

1. Blockwork
2. Steel column
3. Gypframe GA1 Steel Angle suitably fixed to blockwork at 600mm centres (angle may be fixed with leg pointing outward where minimum 25mm Glasroc F FIRECASE used or blockwork is to receive plaster finish)
4. Plaster finish
5. Glasroc F FIRECASE fixed together and to Gypframe GA1 Steel Angles with Glasroc F FIRECASE Screws at 150mm centres
6. Glasroc F FIRECASE fixed together and to soldiers with Glasroc F FIRECASE Screws at 150mm centres
7. Glasroc F FIRECASE soldiers at 1200mm centres (2 together at board joints)

GypWall CLASSIC - The definitive metal stud partition system

GypWall CLASSIC partitions are cost-effective, multi-purpose partitions, which have provided the industry standard for many years. They are suitable for all types of buildings, including residential and commercial.

Key benefits

- High levels of fire resistance
- Range of stud options to match performance requirements
- Satisfies *BS 5234* strength and robustness requirements up to Severe Duty
- 30 - 120 minutes fire resistance to BS and EN standards
- Achieve high levels of sound insulation
- Accommodate services within stud cavity
- Can allow for deflection at the head
- Gypframe metal framework will not twist, warp or rot

System components

Gypframe metal products

48 S 50 'C' Stud

Length
2400, 2700mm
3000, 3300, 3600mm

70 S 50 'C' Stud

Length
2400, 2700mm
3000, 3300mm
3600, 4200mm

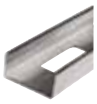

146 S 50 'C' Stud

Length
2400, 2700mm
3000, 3300mm
4200mm

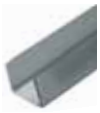

Floor & Ceiling Channels
Standard, Deep Flange Floor & Ceiling Channel (DC) and Extra Deep Flange Floor & Ceiling Channel (EDC). All channels are available in 3600mm only.

99 FC 50 Fixing Channel

Length
2400mm

150 FC 90 Fixing Channel

Length
1197mm

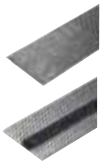

GFS1 Fixing Strap

Length
2400mm

or

GFT1 Fixing 'T'

Length
2400mm

GA5 Internal Fixing Angle

Length
3600mm

GA6 Splayed Angle

Length
2400, 3600mm

Glasroc F board products

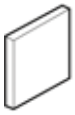

Glasroc F MULTIBOARD

Thickness	10, 12.5mm
Width	1200mm

Fixing and finishing products

Gyproc Wafer Head Drywall Screws
For metal-to-metal fixing up to 0.79mm thick.

or

Gyproc Wafer Head Jack-Point Screws
For metal-to-metal fixing 0.8mm thick or greater and Gypframe 'I' Studs greater than 0.55mm thick.

Gyproc Drywall Screws
For fixing boards to stud framing up to 0.79mm thick.

or

Gyproc Jack-Point Screws
For fixing boards to stud framing 0.8mm thick or greater and Gypframe 'I' Studs greater than 0.55mm thick.

Gyproc Sealant
Sealing air paths for optimum sound insulation.

Gyproc jointing materials
For seamless jointing.

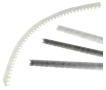

Gyproc edge beads
To protect and enhance board edges.

Gyproc Control Joint
To accommodate structural movement.

Gyproc FireStrip
For fire-stopping deflection heads.

Thistle Board Finish or Thistle Multi-Finish
To provide a plaster skim finish.

or

Thistle Durafinish 25kg
To provide improved resistance to accidental damage.

Isover APR 1200
25mm and 50mm, for improved acoustic performance.

System installation

Gypframe Floor & Ceiling Channel is fixed at the head and base. Gypframe studs are fitted vertically to a friction-fit within the channel sections, and to abutments, to form the framework. This allows for adjustment during boarding. Studs are fitted so as to all face the same way. Additional framing is installed as required to support heavy fixtures.

Boards are screw-fixed to framing members to form the lining. Horizontal board-end joints of face lining boards should be backed with Gypframe GFS1 Fixing Strap (double layer) or Gypframe GFT1 Fixing 'T' (single layer).

Openings

Details for openings differ according to Duty requirements. Refer to **Design - Openings** for further details.

Services

Electrical and other services are normally installed after one side is boarded. Horizontal runs are routed through cut-outs in the studs. Gypframe 99 FC 50 Fixing Channel can be installed between studs to support recessed switch boxes / socket outlets, or a high performance socket box detail used where higher acoustic performance is required.

Performance

EN — Table 1a – GypWall CLASSIC 48mm Gypframe 'C' Studs
Solutions to satisfy *EN 1364-1: 1999*

1

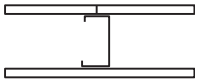

One layer of board each side of 48mm Gypframe 'C' Studs at 600mm centres. Linings as in table.

Detail	Board type	Lining thickness mm	Partition thickness mm	Approx. weight kg/m²	Maximum partition height[1] mm	Sound insulation R_w dB	Duty rating	System reference
60 minutes fire resistance EN								
1	Glasroc F MULTIBOARD	1 x 12.5	75	25	2500	36	Severe	G106010

[1] The maximum heights quoted are limited by the fire state field of application or by limiting deflection of L/240 at 200Pa, whichever is the more onerous.

NB The fire resistance and sound insulation performances are for imperforate partitions, walls and ceilings incorporating boards with joints taped and filled, or skimmed according to British Gypsum's recommendations. The quoted performances are achieved only if British Gypsum components are used throughout, and the Company's fixing recommendations are strictly observed. Any variation in the specifications should be checked with British Gypsum.

BS — Table 1b – GypWall CLASSIC 48mm Gypframe 'C' Studs
Solutions to satisfy *BS 476: Part 8: 1972 or BS 476: Part 22: 1987*

1

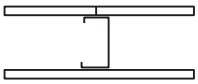

One layer of board each side of 48mm Gypframe 'C' Studs at 600mm centres. Linings as in table.

2

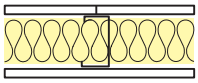

One layer of board each side of 48mm Gypframe 'C' Studs at 600mm centres. 50mm Isover APR 1200 in the cavity. Linings as in table.

3

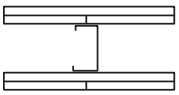

Two layers of board each side of 48mm Gypframe 'C' Studs at 600mm centres. Linings as in table.

Detail	Board type	Lining thickness mm	Partition thickness mm	Approx. weight kg/m²	Maximum partition height[1] mm	Sound insulation R_w dB	Duty rating	System reference
30 minutes fire resistance BS								
1	Glasroc F MULTIBOARD	1 x 10	70	20	2500	35	Heavy	G106006
60 minutes fire resistance BS								
1	Glasroc F MULTIBOARD	1 x 12.5	75	25	2500	36	Severe	G106010
2	Glasroc F MULTIBOARD	1 x 10	70	20	2500	43	Heavy	G106008
120 minutes fire resistance BS								
3	Glasroc F MULTIBOARD	2 x 10	90	40	3100	41	Severe	G106011

[1] Based on a limiting deflection of L/240 at 200Pa.

NB The fire resistance and sound insulation performances are for imperforate partitions, walls and ceilings incorporating boards with joints taped and filled, or skimmed according to British Gypsum's recommendations. The quoted performances are achieved only if British Gypsum components are used throughout, and the Company's fixing recommendations are strictly observed. Any variation in the specifications should be checked with British Gypsum.

Performance

Table 2 – GypWall CLASSIC 70mm Gypframe 'C' Studs
Solutions to satisfy *BS 476: Part 22: 1987*

1

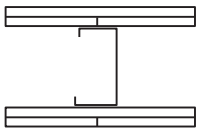

Two layers of board each side of 70mm Gypframe 'C' Studs at 600mm centres. Linings as in table.

Detail	Board type	Lining thickness mm	Partition thickness mm	Approx. weight kg/m²	Maximum partition height[1] mm	Sound insulation R_w dB	Duty rating	System reference
120 minutes fire resistance BS								
1	Glasroc F MULTIBOARD	2 x 10	112	40	4200	42	Severe	G106013

[1] Based on a limiting deflection of L/240 at 200Pa.

NB The fire resistance and sound insulation performances are for imperforate partitions, walls and ceilings incorporating boards with joints taped and filled, or skimmed according to British Gypsum's recommendations. The quoted performances are achieved only if British Gypsum components are used throughout, and the Company's fixing recommendations are strictly observed. Any variation in the specifications should be checked with British Gypsum.

NB For heights between 4200mm and 8000mm, Gypframe Deep Flange Floor & Ceiling Channel (DC) should be used at head and base.

Table 3 – GypWall CLASSIC 146mm Gypframe 'C' Studs
Solutions to satisfy *BS 476: Part 22: 1987*

1

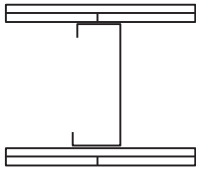

Two layers of board each side of 146mm Gypframe 'C' Studs at 600mm centres. Linings as in table.

Detail	Board type	Lining thickness mm	Partition thickness mm	Approx. weight kg/m²	Maximum partition height[1] mm	Sound insulation R_w dB	Duty rating	System reference
120 minutes fire resistance BS								
1	Glasroc F MULTIBOARD	2 x 10	188	40	7100	48	Severe	G106014

[1] Based on a limiting deflection of L/240 at 200Pa.

NB The fire resistance and sound insulation performances are for imperforate partitions, walls and ceilings incorporating boards with joints taped and filled, or skimmed according to British Gypsum's recommendations. The quoted performances are achieved only if British Gypsum components are used throughout, and the Company's fixing recommendations are strictly observed. Any variation in the specifications should be checked with British Gypsum.

NB For heights between 4200mm and 8000mm, Gypframe Deep Flange Floor & Ceiling Channel (DC) should be used at head and base.

Design

Planning - key factors
The position of services and heavy fixtures should be pre-determined and their installation planned into the frame erection stage.

Wind loading
GypWall partitions are non-loadbearing but can accept a degree of wind loading, for example when used in buildings with large or multiple external doors.

Cavity fire barriers
Minimum 12.5mm Gyproc plasterboard or 12.5mm Glasroc F MULTIBOARD, screw-fixed into the web of perimeter channels or vertical studs, will provide a satisfactory closure to flame or smoke.

Services
Penetrations
Penetrations of fire-resistant or sound-insulating constructions for services need careful consideration to ensure that the performance of the element is not downgraded and also that the services themselves do not act as the mechanism of fire spread or sound transmission.

Independent support
When designing for the installation of services such as fire dampers and associated ductwork through a GypWall partition, consideration should be given to the size and weight of the damper as this will determine whether it can be supported directly from the partition or needs to be independently supported from the structure.

Electrical
The installation of electrical services should be carried out in accordance with *BS 7671: 2008*. The cut-outs in the studs can be used for routing electrical and other small services (refer to Construction detail - 1). Switch boxes and socket outlets can be supported from Gypframe 99 FC 50 Fixing Channel fixed horizontally between studs, or a high performance socket box detail used where higher acoustic performance is required.

Fixing floor and ceiling channels
Floor channels must be securely fixed with a row of fixings at 600mm maximum centres. With 94mm and 148mm channels, two rows of staggered fixings are required, each row at 600mm centres and each fixing 25mm in from the flange. If the floor is uneven, a 38mm thick timber sole plate equal to the width of the channel should be used. If the concrete or screeded floor is new, consideration should be given to the installation of a damp proof membrane between the floor surface and the channel or sole plate.

Ceiling channels must be securely fixed at 600mm maximum centres. With 94mm and 148mm channels, two rows of staggered fixings are required, each row at 600mm centres and each fixing 25mm in from the flange. Extra support may be necessary to provide positive fixing points with some constructions.

Door openings
The designer should consider thickness tolerances of the partition types in relation to the proposed door frame detail. Standard door frame detailing to suit *BS 5234* Light and Medium Duty applications is shown in Construction detail - 12. Detailing to satisfy *BS 5234: 1992* requirements for Heavy and Severe Duty is shown in Construction detail - 13. Where additional provision is required to support heavy doorsets contact the British Gypsum Drywall Academy for guidance. The door manufacturer should also be consulted in relation to door details.

Framing surround for openings
Where services such as horizontal ducts, fire dampers and access panels are required to penetrate the wall, their position should be predetermined in order that a framed opening can be provided. The openings should be constructed using established metal stud procedures. Refer to Construction details - 20-21.

Control joints
Control joints may be required in the partition to relieve stresses induced by expansion and contraction of the structure (refer to Construction detail - 11). They should coincide with movement joints within the surrounding structure.

Deflection heads
Partition head deflection designs may be necessary to accommodate deflections in the supporting floor. Deflection heads may also be required to the underside of roof structures subjected to positive and negative pressures. Refer to Construction details - 14-19.

Access for maintenance
Where access is required within the partition, to maintain services for example, Gyproc Profilex Access Panels should be used.

Fixtures
Lightweight fixtures can be made directly to the partition linings. Medium weight fixtures can be made to Gypframe 99 FC 50 Fixing Channel. Heavyweight fixtures (to *BS 5234*), can be fixed by using Gypframe 150 FC 90 Fixing Channel.

Board finishing
Glasroc F MULTIBOARD joints are treated using Gyproc Joint Tape bedded in Gyproc Joint Cement. External angles / corners can be reinforced using Gyproc No-Coat Ultraflex 325 bedded in Gyproc Joint Cement. If a plaster finish is required, joints should be reinforced and Thistle Board Finish, Thistle Multi-Finish or Thistle Durafinish applied.

Construction details

1 Service cut-outs (all dimensions in mm)

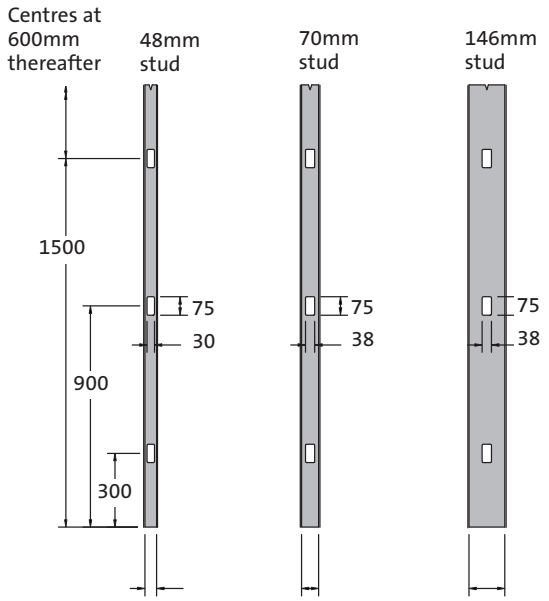

2 Head and base

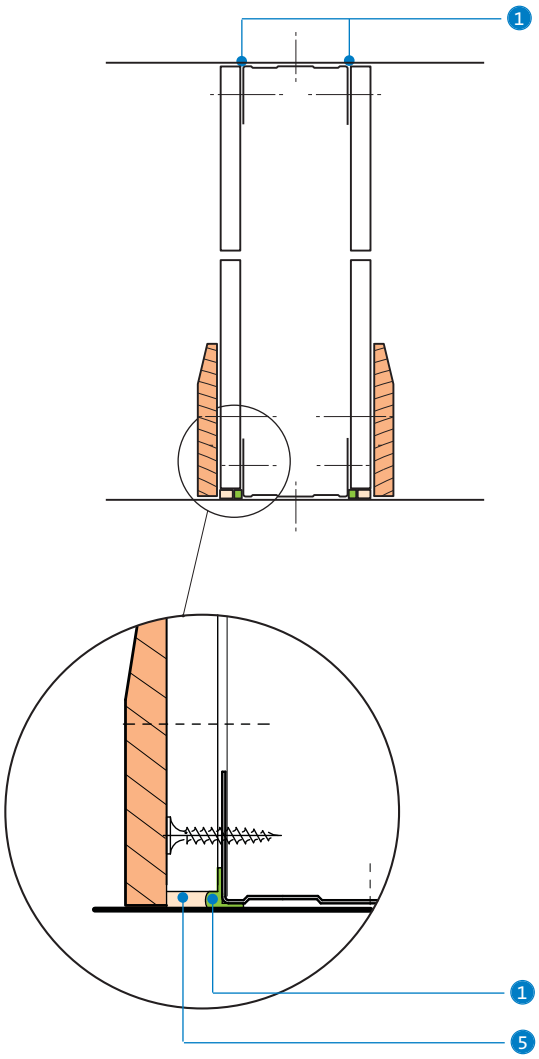

3 Internal wall junction - stud to wall and stop end detail

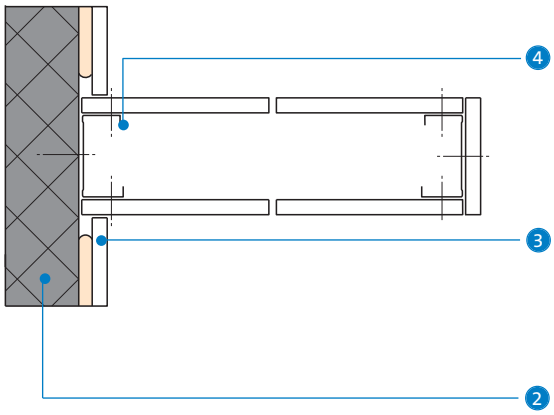

1. Gyproc Sealant[1]
2. Internal blockwork
3. Glasroc F MULTBOARD
4. Gypframe stud (fixed at 600mm centres)
5. Bulk fill with Gyproc jointing materials

[1] Where partition / ceiling junction is not finished apply Gyproc Sealant.

NB Service cut-out dimensions are the same for Gypframe 'C' Studs and Gypframe 'I' Studs.

Construction details

4 'T' junction detail when acoustic performance is a key consideration - to help reduce flanking transmission

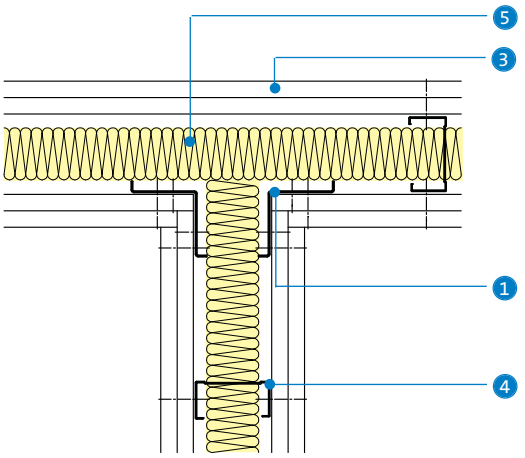

5 Junction with external wall

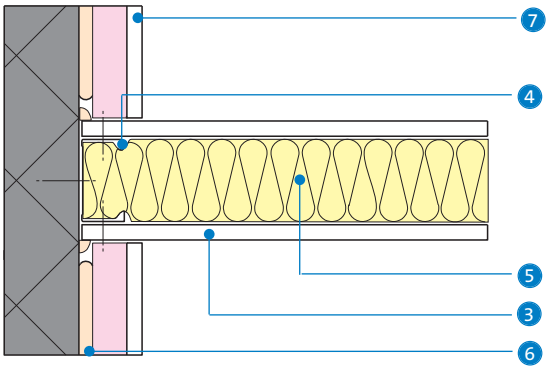

6 Standard 'T' junction (single layer)

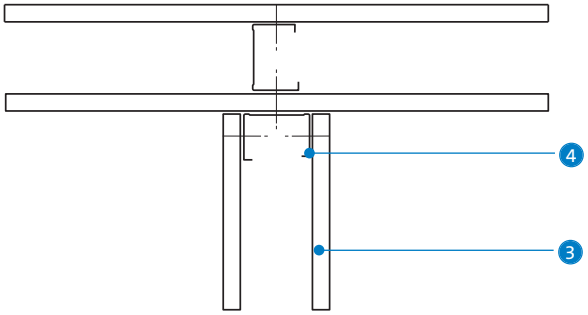

7 Gypframe 99 FC 50 Fixing Channel (short legs flattened at stud positions)

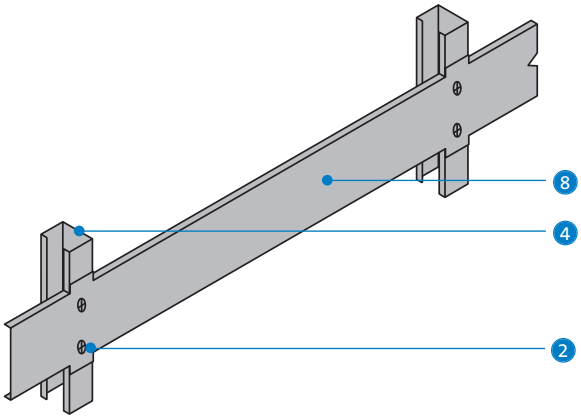

1. Gypframe GA5 Internal Fixing Angle
2. Gypframe Wafer Head Screw (two fixings per stud position)
3. Glasroc F MULTIBOARD
4. Gypframe 'C' Stud
5. Isover insulation
6. Gyproc Dri-Wall Adhesive
7. Gyproc ThermaLine laminate
8. Gypframe 99 FC 50 Fixing Channel

Construction details

8 Corner detail (single layer)

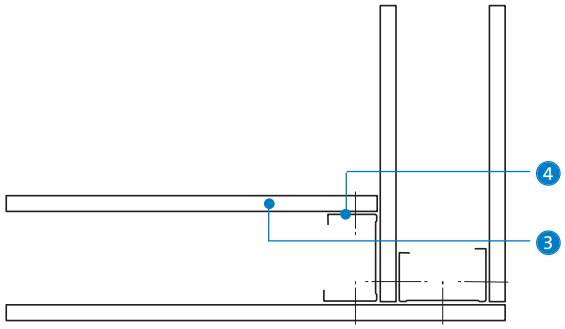

9 Corner detail (double layer)

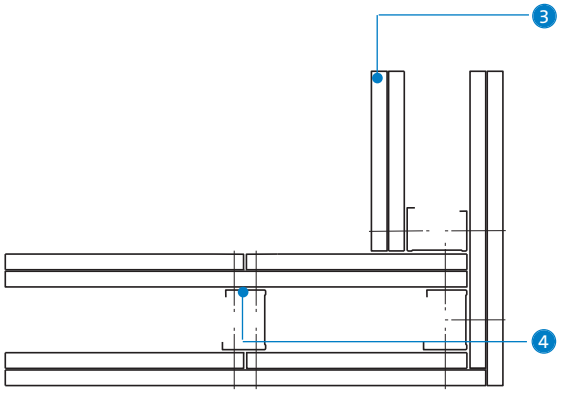

10 Splayed corner detail. Gypframe GA6 Splayed Angle is also required on the inside of the splayed corner of a fire-rated partition

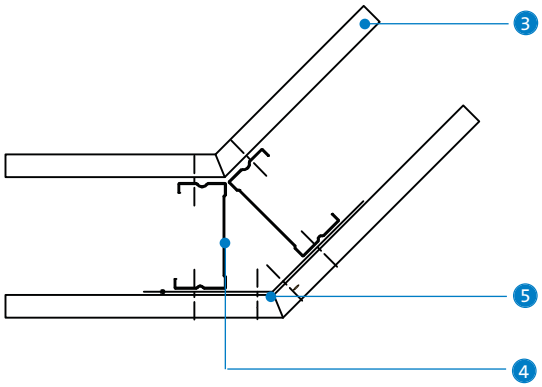

11 Control joint

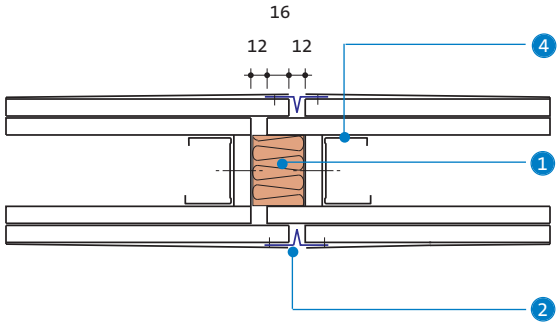

1. Stone mineral wool (minimum density 23kg/m²)
2. Gyproc Control Joint
3. Glasroc F MULTIBOARD
4. Gypframe 'C' Stud
5. Gypframe GA6 Splayed Angle

Construction details

12 Standard door frame to satisfy *BS 5234: Parts 1 & 2: 1992* - Light and Medium Duty

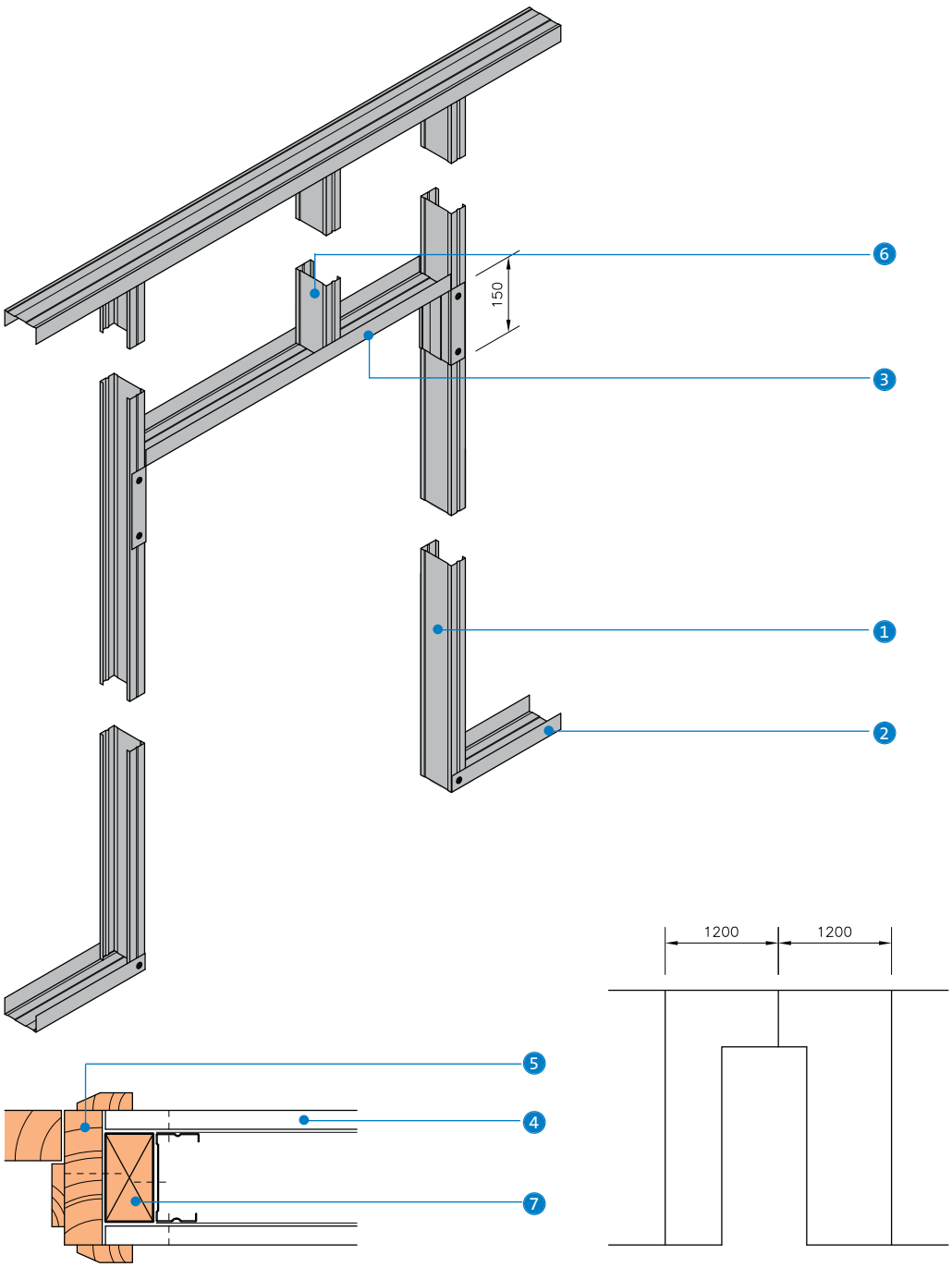

1. Gypframe 'C' Stud
2. Gypframe Standard Floor & Ceiling Channel
3. Gypframe Standard Floor & Ceiling Channel cut and bent to form door head
4. Glasroc F MULTIBOARD
5. Timber door frame and architrave
6. Gypframe 'C' Stud to maintain stud module
7. Timber sub-frame

NB Advice should be sought from the door manufacturer prior to the construction of these details.

Construction details

13 Standard door frame to satisfy *BS 5234: Parts 1 & 2: 1992* - Heavy and Severe Duty

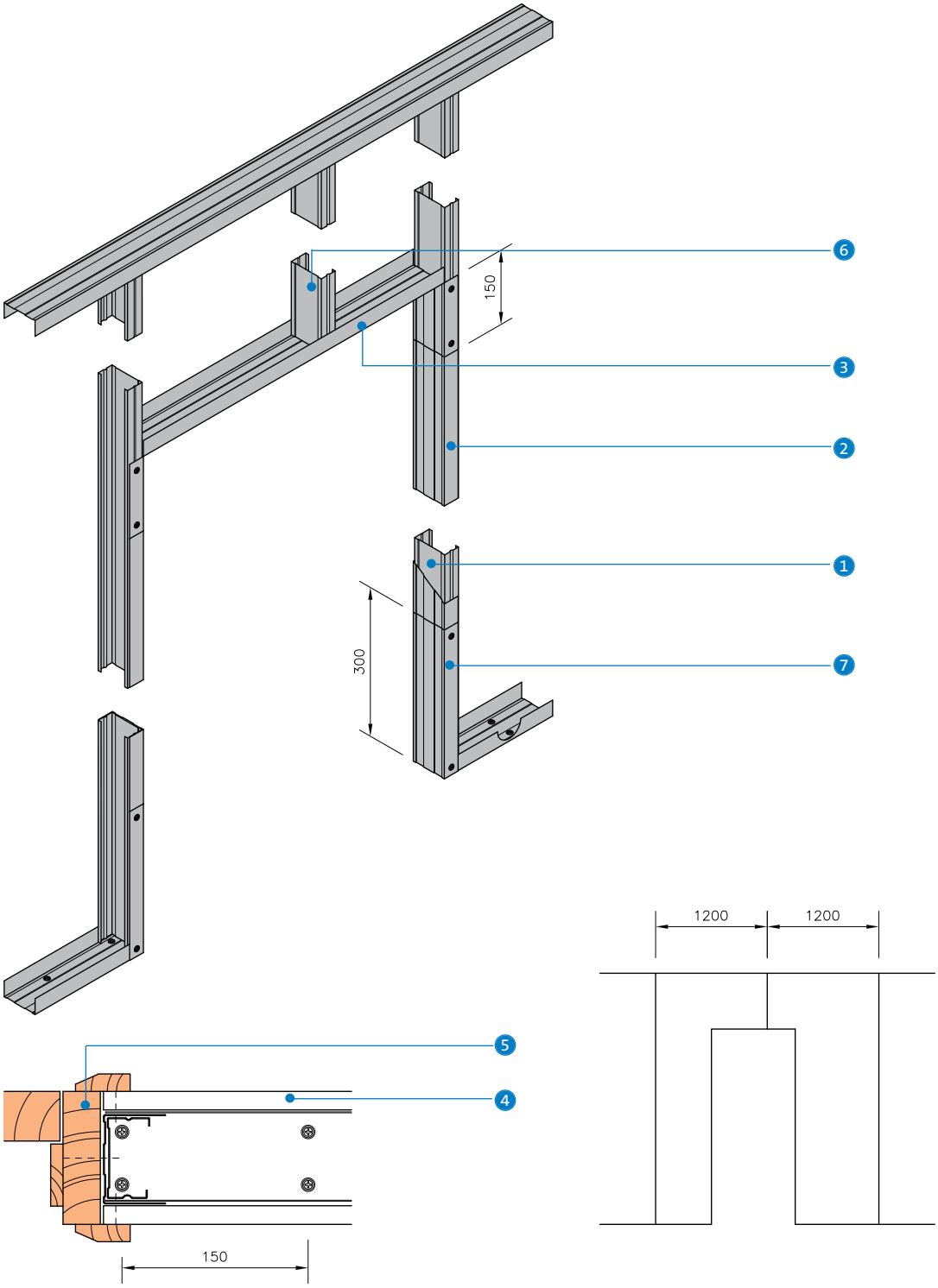

1. Gypframe 'C' Stud
2. Gypframe Standard Floor & Ceiling Channel to sleeve studs
3. Gypframe Standard Floor & Ceiling Channel cut and bent to form door head
4. Glasroc F MULTIBOARD
5. Timber door frame and architrave
6. Gypframe 'C' Stud to maintain stud module
7. Gypframe Standard Floor & Ceiling Channel cut and bent to extend up studs

NB Advice should be sought from the door manufacturer prior to the construction of these details.

NB The studs each side of the opening are sleeved to full door height with Gypframe Standard Floor & Ceiling Channel. The Gypframe channel is cut 300mm short to allow for the extension of floor channel, which is cut, bent, interleaved and then fixed twice to each side. At the head, the channel is cut and bent to extend 150mm down the face of the studs, and fixed twice to each side.

Construction details

14 Deflection head – 60 minutes fire resistance, 15mm downward deflection

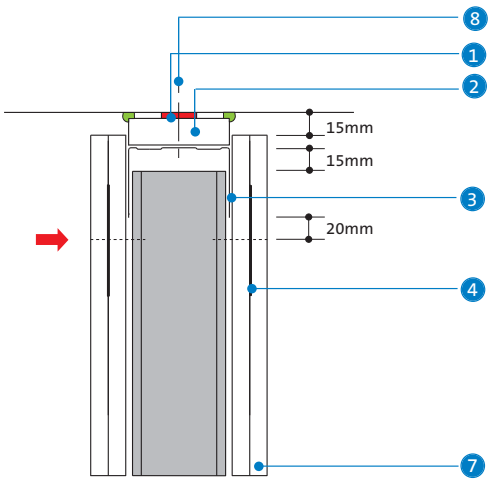

15 Deflection head – up to 120 minutes fire resistance, 15mm downward deflection

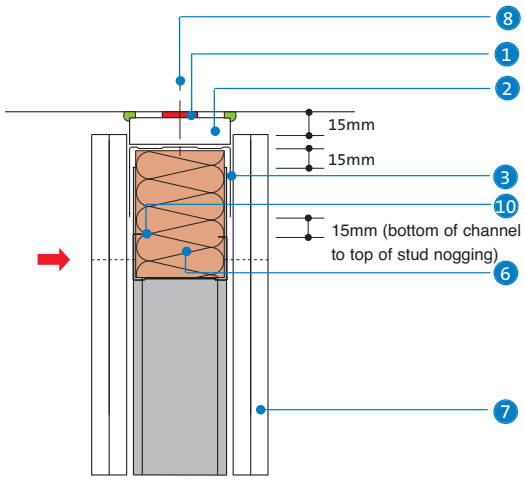

16 Deflection head – 60 minutes, plus or minus 25mm

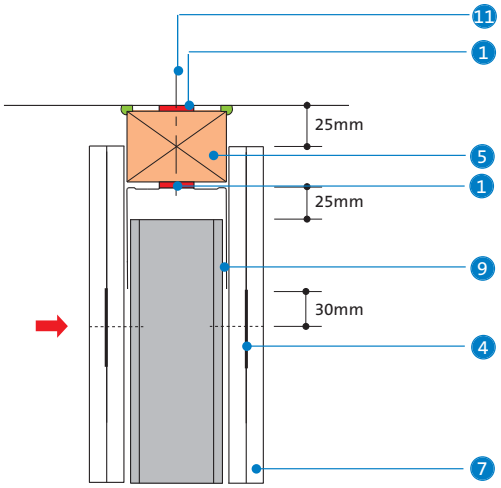

17 Deflection head – 60 minutes fire resistance, 50mm downward deflection

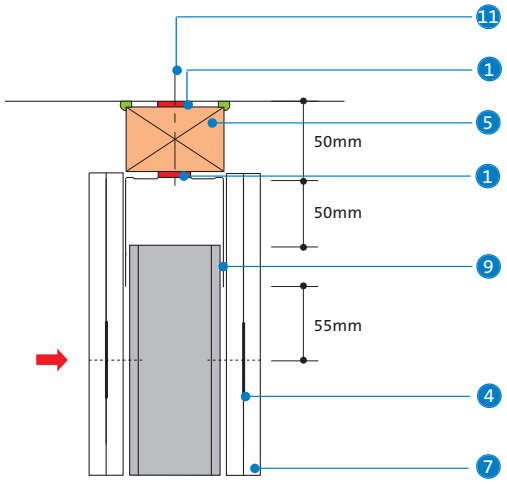

1. Gyproc FireStrip (continuous line)
2. Gyproc CoreBoard or Glasroc F FIRECASE
3. Gypframe Deep Flange Floor & Ceiling Channel (DC)
4. Gypframe GFS1 Fixing Strap
5. Timber head plate (softwood)
6. Stone mineral wool (minimum 33kg / m³) retained by stud nogging
7. Glasroc F MULTIBOARD
8. Head channel fixing through firestop into structure at 600mm max. centres
9. Gypframe Extra Deep Flange Floor & Ceiling Channel (EDC) fixed to timber head plate at 600mm centres
10. Nogging cut from Gypframe 'C' Stud
11. Head plate fixing to structure

NB No fixings should be made through the boards into the flanges of the head channel The arrow (➡) denotes the position of the uppermost board fixing, which should be made into Gypframe GFS1 Fixing Strap (or stud nogging in **Construction detail - 15**). Continuous Gyproc FireStrip must be installed as shown in order to maintain fire performance.

Construction details

18 Deflection head – 60 minutes, plus or minus 25mm

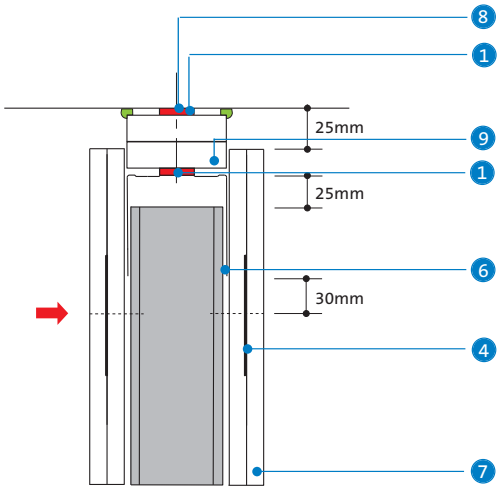

19 Deflection head – 60 minutes, 50mm downward deflection

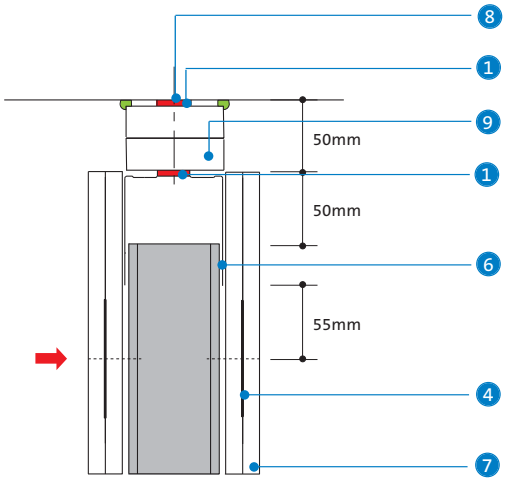

20 Opening for service penetrations in fire-rated partitions

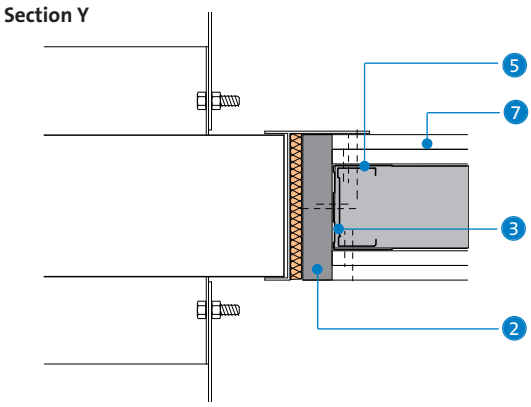

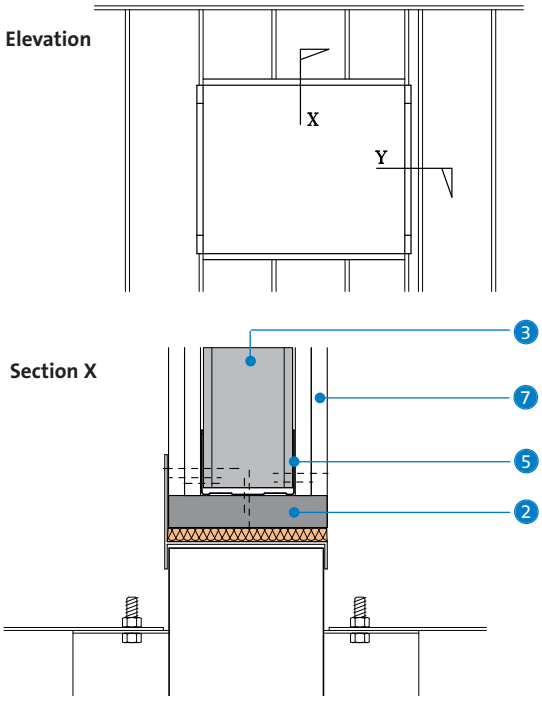

1. Gyproc FireStrip (continuous line)
2. Penetration seal (as tested by the damper manufacturer or proprietary alternative, confirmed by system designer / specifier as compatible using test data)
3. Gypframe 'C' Stud
4. Gypframe GFS1 Fixing Strap
5. Gypframe Floor & Ceiling Channel (cloaking stud in Section Y)
6. Gypframe Extra Deep Flange Floor & Ceiling Channel (EDC)
7. Glasroc F MULTIBOARD
8. Head channel fixing through firestop into structure at 600mm max. centres
9. 25mm Glasroc F FIRECASE

NB No fixings should be made through the boards into the flanges of the head channel The arrow (➡) denotes the position of the uppermost board fixing, which should be made into Gypframe GFS1 Fixing Strap. Continuous Gyproc FireStrip must be installed as shown in order to maintain fire performance.

Construction details

21 Typical fire tested construction in which the damper is supported by the partition (isometric view)

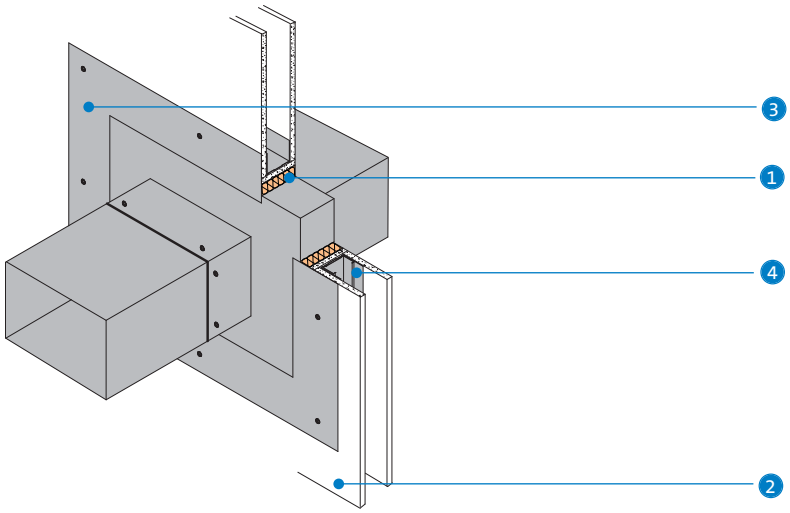

22 Board layout - typical configuration

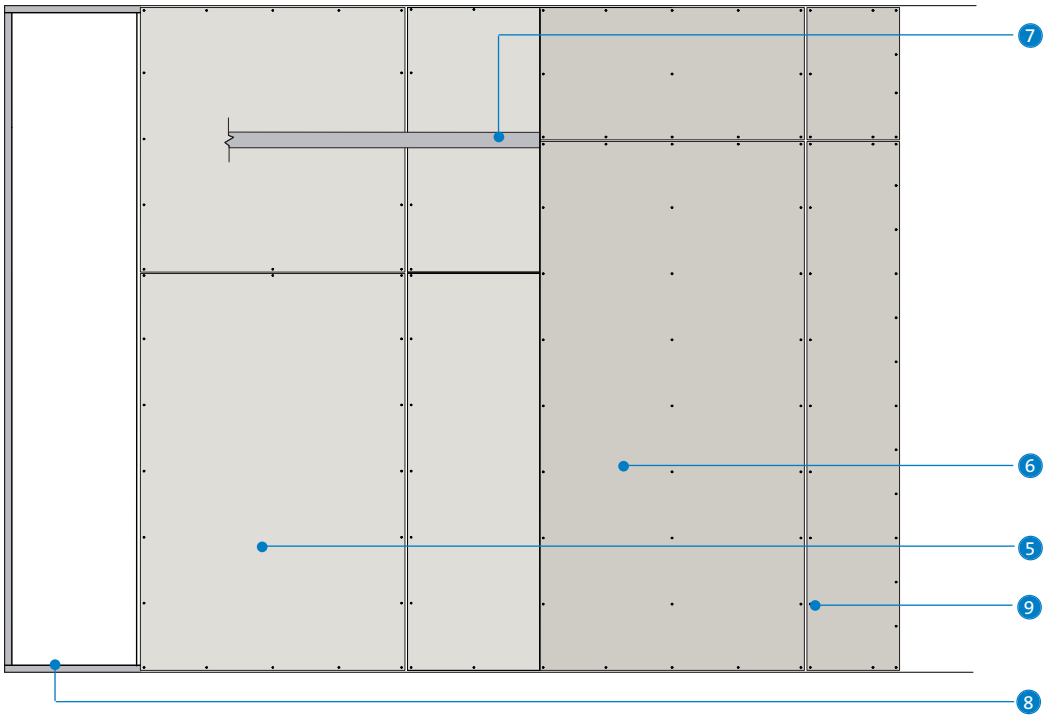

1. Stone mineral wool (80kg/m²)
2. Glasroc F MULTIBOARD
3. Damper (by others). Maximum weight of damper should not exceed 57kg. Maximum size of damper should not exceed 1400 x 1200mm.
4. Gypframe 'C' Stud
5. Inner layer board
6. Face (second layer) board
7. Gypframe GFS1 Fixing Strap or Gypframe GFT1 Fixing 'T'
8. Gypframe metal framing
9. Gyproc Drywall Screws

Construction details

23 Typical partition and purlin junction detail

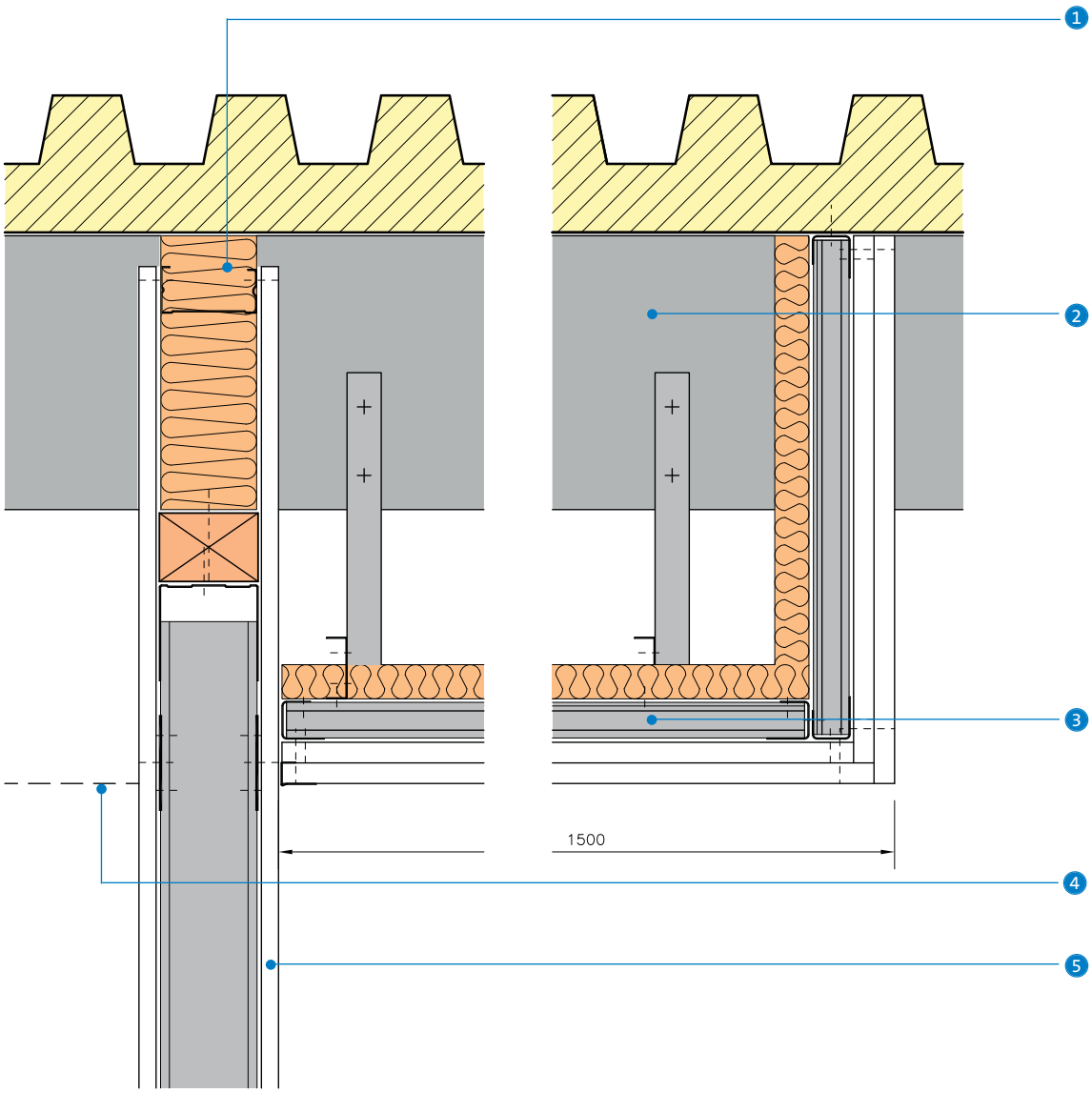

1. Firestopping
2. Roof purlin
3. CasoLine MF
4. Ceiling lining mirrored on other side of partition
5. GypWall CLASSIC

NB This detail illustrates the general principles of design. The actual specification and performance requirements must be clarified with the local building control authorities before any construction work is undertaken.

FireWall - High performance fire-resistant wall system

FireWall is a non-loadbearing wall which provides up to 240 minutes fire resistance. It is used in retail and industrial storage areas to provide sub-division, and other specific conditions of use as determined by insurance companies.

Key benefits

- Satisfies insurance company requirements for enhanced fire performance
- Satisfies *BS 5234* strength and robustness requirements up to Severe Duty
- Minimal wall thickness with optimal fire resistance
- 240 minutes fire resistance

System components

Gypframe metal products

	92 S 10 'C' Stud	**Length** 3600, 4200mm
	92 I 90 'I' Stud	**Length** 3600, 5000, 6000mm
	Extra Deep Flange Floor & Ceiling Channel **94 EDC 70**	**Length** 3600mm
	Fixing Channels **99 FC 50** **150 FC 90**	**Length** 2400mm 1197mm
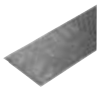	**GFS1 Fixing Strap**	**Length** 2400mm
	Gypframe GA2 Steel Angle Used at deflection head.	**Length** 3200mm

Glasroc F board products

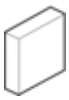	**Glasroc F FIRECASE** Thickness Width	 15mm 1200mm
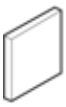	**Glasroc F MULTIBOARD** Thickness Width	 6mm 1200mm

Fixing and finishing products

Gyproc Jack-Point Screws
For fixing boards to stud framing 0.8mm thick or greater and Gypframe 'I' Studs greater than 0.50mm thick.

Gyproc Wafer Head Jack-Point Screws
For metal-to-metal fixing 0.8mm thick or greater and Gypframe 'I' Studs greater than 0.55mm thick.

Glasroc F FIRECASE Screws
Fixing 6mm Glasroc F MULTIBOARD to Glasroc F FIRECASE.

Gyproc Sealant
For sealing airpaths to achieve optimum sound insulation.

Gyproc jointing materials
For seamless jointing.

Gyproc Control Joint
To accommodate structural movement.

Gyproc FireStrip
For fire-stopping deflection heads.

Thistle Board Finish or Thistle Multi-Finish
To provide a plaster skim finish.

or

Thistle Durafinish 25kg
To provide improved resistance to accidental damage.

Stone mineral wool insulation (100kg/m³)
40mm and 50mm thick batts (by others).

System installation

Run of lining

Gypframe Floor & Ceiling Channel is suitably fixed at the head and base. Gypframe 'C' Studs or Gypframe 'I' Studs are fitted vertically within the channel sections to form the framework. Gypframe 'C' Studs are fixed at abutments. Additional framing is installed as required to support heavy fixtures.

Boards are screw-fixed to all framing members to form the lining, except 6mm Glasroc F MULTIBOARD which is screw-fixed to Glasroc F FIRECASE linings. Horizontal board-end joints should be backed with Gypframe GFS1 Fixing Strap. Stone mineral wool is fitted into the stud cavity (ensuring joints are half staggered) and suitably secured prior to boarding the second side.

Performance

BS

Table 1 – FireWall
Solutions to satisfy *BS 476: Part 22: 1987*

1

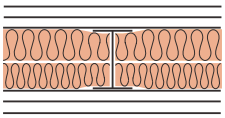

Two layers of board each side of Gypframe 92 I 90 'I' Studs spaced at 600mm centres and located in Gypframe Extra Deep Flange Floor & Ceiling Channel. 90mm thickness of stone mineral wool 100kg/m³ (40mm & 50mm batts) in the cavity.

2

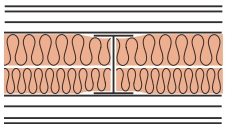

Three layers of board each side of Gypframe 92 I 90 'I' Studs spaced at 600mm centres and located in Gypframe Extra Deep Flange Floor & Ceiling Channel. 90mm thickness of stone mineral wool 100kg/m³ (40mm & 50mm batts) in the cavity.

Detail	Partition thickness mm	Board type	Lining thickness mm	Maximum wall height[1] mm	Sound insulation R_w dB	Duty rating	Approx. weight kg/m²	System reference
180 minutes fire resistance BS								
1	155	Glasroc F FIRECASE	2 x 15[2]	6900	56	Severe	75	G106I019
240 minutes fire resistance BS								
2	170	Glasroc F FIRECASE + Glasroc F MULTIBOARD	2 x 15 + 6	6900	59	Severe	87	G106I018

[1] Maximum wall heights are based on L/240 at 200Pa.
[2] Actual test result gave 240 mins integrity : 222 mins insulation.

NB The fire resistance and sound insulation performances are for imperforate partitions, walls and ceilings incorporating boards with joints taped and filled, or skimmed according to British Gypsum's recommendations. The quoted performances are achieved only if British Gypsum components are used throughout, and the Company's fxing recommendations are strictly observed. Any variation in the specifications should be checked with British Gypsum.

Design

Planning - key factors
The position of services should be pre-determined and their installation planned into the frame erection stage.

Wind loading
FireWall is non-loadbearing but can accept a degree of wind loading, for example when used in buildings with large or multiple external doors.
▶ Refer to British Gypsum Drywall Academy.

Cavity fire barriers
Minimum 12.5mm Gyproc plasterboard or 12.5mm Glasroc F MULTIBOARD, screw-fixed into the web of perimeter channels or vertical studs, will provide a satisfactory closure to flame or smoke, alternatively 15mm Glasroc F FIRECASE may be used.

Services
Penetrations
Penetrations of fire-resistant or sound-insulating constructions for services need careful consideration to ensure that the performance of the element is not downgraded and also that the services themselves do not act as the mechanism of fire spread or sound transmission.

Electrical
The installation of electrical services should be carried out in accordance with *BS 7671: 2008*. Service penetrations and socket outlets should always be avoided, where practical switch and socket boxes can be surface mounted without affecting the fire resistance of the wall.

Fixing floor and ceiling channels
Floor and ceiling channels must be securely fixed with a row of fixings at 600mm maximum centres. With 148mm and 94mm channels, two rows of staggered fixings are required, each row at 600mm centres and each fixing 25mm in from the flange.

If the concrete or screeded floor is new, consideration should be given to the installation of a damp proof membrane between the floor surface and the channel or sole plate.

Deflection heads
Partition head deflection designs may be necessary to accommodate deflections in the supporting floor. Deflection heads may also be required to the underside of roof structures subjected to positive and negative pressures. Refer to **Construction details - 1** and **2**.

Openings
FireWall is used to divide space into fire compartments and, as such, openings are generally not required. If openings are to be specified they must be shown by fire test to maintain the fire performance of the wall.

Fixtures
Lightweight fixtures can be made directly to the partitions. Medium weight fixtures can be made to Gypframe 99 FC 50 Fixing Channel. Heavyweight fixtures (to *BS 5234*), can be fixed by using Gypframe 150 FC 90 Fixing Channel.

Board finishing
Glasroc F FIRECASE or Glasroc F MULTIBOARD joints are treated using Gyproc Joint Tape bedded in Gyproc Joint Cement. External angles / corners can be reinforced using Gyproc No-Coat Ultraflex 325 bedded in Gyproc Joint Cement. If a plaster finish is required, joints should be reinforced and Thistle Board Finish, Thistle Multi-Finish or Thistle Durafinish applied.

Construction details

1 15mm downward deflection - 180 minutes fire resistance

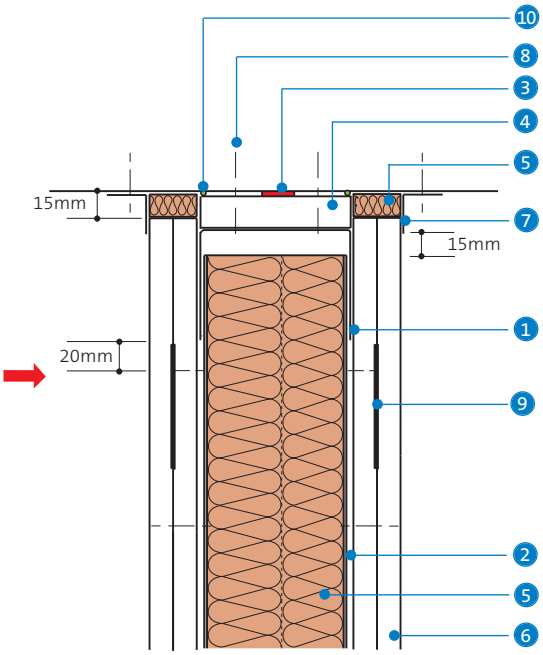

2 15mm downward deflection - 240 minutes fire resistance

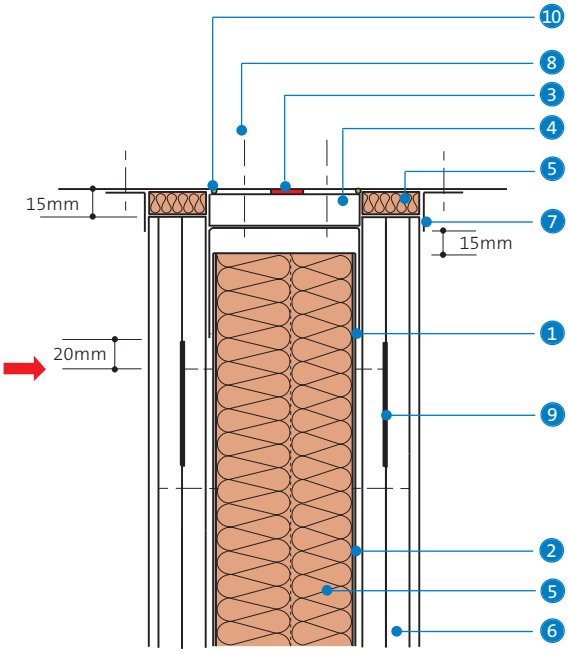

1. Gypframe Extra Deep Flange Floor & Ceiling Channel
2. Gypframe 'I' Stud
3. Gyproc FireStrip (continuous line)
4. 20mm Glasroc F FIRECASE forming fire-stop (cut on site)
5. Stone mineral wool (100kg/m³)
6. Glasroc F board linings
7. Gypframe GA2 Steel Angle
8. Staggered rows of fixings through fire-stop
9. Gypframe GFS1 Fixing Strap
10. Gyproc Sealant

NB No fixings should be made through the boards into the flanges of the head channel. The arrow (➡) denotes the position of the uppermost board fixing which should be made into Gypframe GFS1 Fixing Strap. Continuous Gyproc FireStrip must be installed as shown in order to maintain fire performance.

Timber stud - Traditional internal partitions

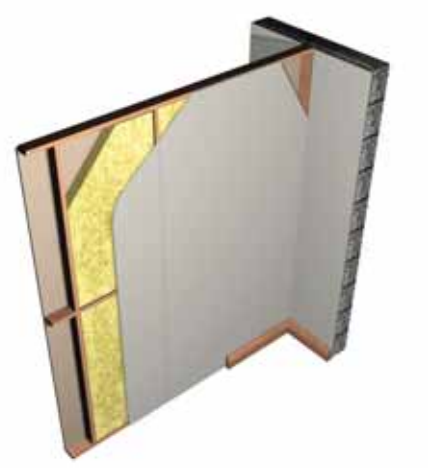

A 'traditional' partition mainly used in residential applications, both in new housing and refurbishment. Timber stud separating or compartment walls are specified as fire and sound resisting walls in residential units such as flats and apartments to meet the requirements of national Building Regulations.

Key benefits

- Loadbearing constructions
- Achieves high levels of fire resistance

System components

Framing

Timber studs
Typically 75mm depth; 38mm width

Glasroc F board products

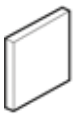

Glasroc F MULTIBOARD

Thickness	10, 12.5mm
Width	1200mm

Fixing and finishing products

Gyproc Drywall Timber Screws
For positive direct fix of boards to timber studs.

Gyproc Sealant
Sealing air paths for optimum sound insulation.

Gyproc jointing materials
For seamless jointing.

Thistle Board Finish or Thistle Multi-Finish
To provide a plaster skim finish.

or

Thistle Durafinish 25kg
To provide improved resistance to accidental damage.

Isover APR 1200
25mm and 50mm, for improved acoustic performance (optional).

System installation

Run of partition
Timber framing is fixed to the perimeter, abutments, and to frame any openings, using suitable fixings. Timber studs are fixed at specified centres. Additional framing is installed as required to support heavy fixtures. Boards are screw-fixed to all supports to form the lining. Horizontal board end joints are backed with timber noggings as required.

Openings
Door openings are formed by fixing full height studs to each side, together with a timber head piece. Door facings are then fixed to the timber ground.

Services
Services are installed normally after one side is boarded. Timber noggings are fixed to support recessed switch boxes / socket outlets.

Performance

EN

Table 1 – 75mm timber stud partitions
Solutions to satisfy *EN 1365-1: 1999*

1

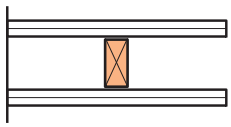

Two layers of board each side of timber studs at 600mm centres. Insulation and board lining as in table.

Detail	Board type	Lining thickness mm	Wall thickness mm	Stud size mm[1]	Load ratio	Sound insulation Rw dB	System reference
60 minutes fire resistance EN							
1	Glasroc F MULTIBOARD	2 x 10	115	75 x 38	60%	38	G106004
90 minutes fire resistance EN							
1	Glasroc F MULTIBOARD	2 x 12.5	125	75 x 38	60%	37	G106005

[1] Stud sizes quoted are minimum; larger sizes will enhance performance.

NB The fire resistance and sound insulation performances are for imperforate partitions, walls and ceilings incorporating boards with joints taped and filled, or skimmed according to British Gypsum's recommendations. The quoted performances are achieved only if British Gypsum components are used throughout, and the Company's fixing recommendations are strictly observed. Any variation in the specifications should be checked with British Gypsum.

Design

Planning - key factors
The position of services and heavy fixings should be pre-determined and their installation planned into the frame erection stage. If a plastered finish is specified, the thickness of the door or glazing frame must allow for the thickness of the plaster finish.

To minimise the risk of cracking at the plasterboard joints, seasoned timber with a moisture content not exceeding that recommended in *BS 5268: Part 2: 1991* should be used. The contractor should ensure that timber supports are accurately spaced, aligned, and levelled.

Cavity fire barriers
Cavity barriers may be required to satisfy the requirements of national Building Regulations.

Services
Penetrations
Penetrations of fire resistant constructions for services need careful consideration to ensure that the integrity of the element is not impaired and also that the services themselves do not act as the mechanism of fire spread.

Electrical
Electrical and other small service runs can be routed within the timber stud cavity. The installation of electrical services should be carried out in accordance with *BS 7671: 2008*. Switch boxes and socket outlets can be supported from timber stud noggings.

Strength and robustness
Timber should be aligned and level, and should meet the requirements of *BS 5268: Part 2: 1991*. The dimensions and assembly of timber supports should be sufficient to allow positive fixing of plasterboard without bounce or undue deflection because of the screwing, or other applied force. When the above fixing conditions cannot be met, a timber batten should be securely fixed to the side of the timber support to increase the bearing surface.

Where boards are fixed at maximum centres in adverse conditions, the standard of lining can be affected. Adverse conditions can generally be described as conditions where high humidity occurs, principally in the cold, damp, autumn / winter period. They also refer to buildings under construction over this period, where both the structure and wet applications such as plastering and screeding are subject to slow drying conditions.

Partition junctions
At a 'T' junction, a ladder frame should be constructed between studs to provide fixing points for the abutting partition, and to support the lining (refer to **Construction detail - 2**). The horizontal members of the frame should be at 600mm maximum centres.

Fixing to super-dried timber
It has been established by test that Gyproc Drywall Timber Screws are the best solution for fixing to standard softwood or super-dried timber (approximately 12% moisture content).

Fixtures
Lightweight fixtures can be made directly to the partitions. Medium weight, or heavy fixtures such as cisterns, radiators or wash basins, can be made directly into the timber supports. Additional studs or timber noggings should be installed as appropriate.

Board finishing
Glasroc F MULTIBOARD joints are treated using Gyproc Joint Tape bedded in Gyproc Joint Cement. External angles / corners can be reinforced using Gyproc No-Coat Ultraflex 325 bedded in Gyproc Joint Cement. If a plaster finish is required, joints should be reinforced and Thistle Board Finish, Thistle Multi-Finish or Thistle Durafinish applied.

Construction details

1 Head and base

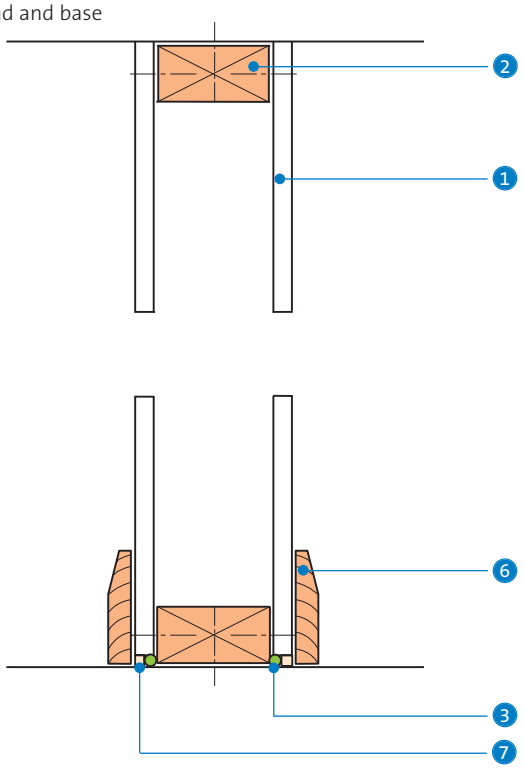

2 'T' junction

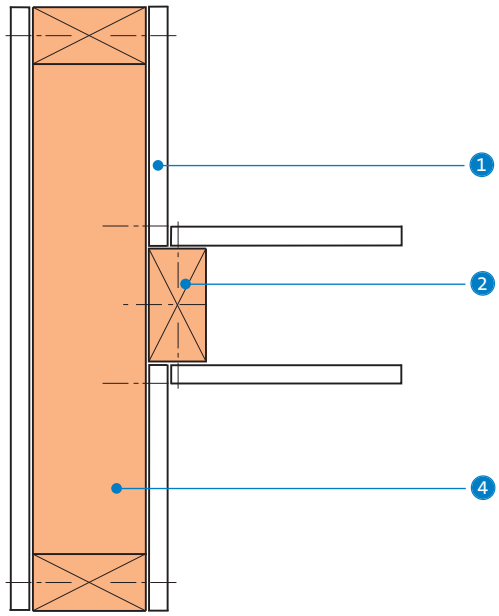

3 Door jamb

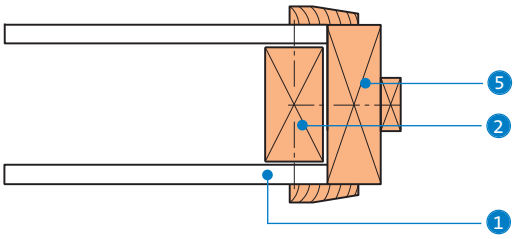

4 Corner junction

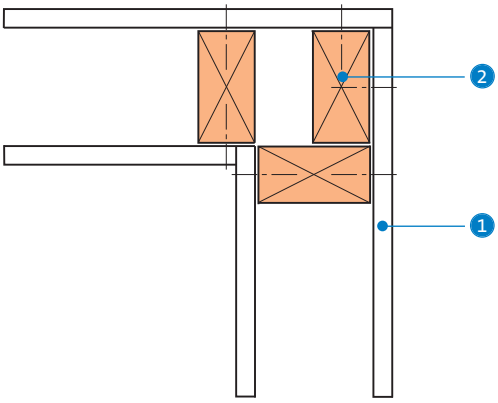

1. Glasroc F MULTIBOARD
2. Timber framing
3. Gyproc Sealant
4. Timber ladder frame (ladder members at 600mm max centres)
5. Door frame
6. Skirting
7. Bulk filled with Gyproc jointing materials

GypWall CURVE - Curved wall lining system

GypWall CURVE is lightweight, non-loadbearing and easily assembled on site. It provides a highly cost-effective way of forming curved walls and linings. The system can be installed in all types of buildings to achieve the radii required by the designer. Boards do not require pre-wetting and there is no requirement for curved timber templates.

Key benefits

- Concave or convex curvature
- Radii down to 600mm
- Uniquely designed channel can be quickly and easily bent to radius
- No requirement for pre-wetting
- No need for curved timber templates
- Choice of linings to suit performance requirements and to maintain continuity
- Boards can be jointed or skimmed in the normal way

System components

Gypframe metal products

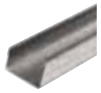

70 S 50 'C' Stud — **Length** 2400, 2700, 3000, 3300, 3600, 4200mm

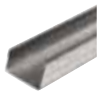

70 S 60 'C' Stud — **Length** 3600, 4200mm

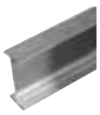

70 I 70 'I' Stud — **Length** 3600, 4200mm

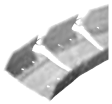

72 EDCL 80 CurveLiner Channel — **Length** 2000mm

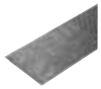

GFS1 Fixing Strap — **Length** 2400mm

Glasroc F board products

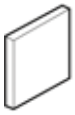

Glasroc F MULTIBOARD

Thickness	6, 10, 12.5mm
Width	1200mm

Fixing and finishing products

Gyproc Drywall Screws
For fixing boards to stud framing up to 0.79mm thick.

Gyproc Jack-Point Screws
For fixing boards to stud framing 0.8mm thick or greater and Gypframe 'I' Studs greater than 0.55mm thick.

Gyproc Sealant
Sealing air paths for optimum sound insulation.

Gyproc jointing materials
For seamless jointing.

Thistle Board Finish or Thistle Multi-Finish
To provide a plaster skim finish.

or

Thistle Durafinish 25kg
To provide improved resistance to accidental damage.

System installation

Gypframe 72 EDCL 80 CurveLiner Channel is bent to the floor and ceiling lines and fixed through to the floor and soffit in two lines at 300mm centres in each line. 70mm Gypframe 'C' Studs or Gypframe 'I' Studs are fitted vertically within channel sections, and to abutments, to form the framework. Studs are fixed into the channel at both head and base and must all face the same way. Additional framing is installed as required to support heavy fixtures.

For single layer board linings, fix boards horizontally. Stagger board joints and avoid vertical joints occuring on the apex of the curve.

For double layer board linings, inner boards are fixed horizontally to all supports. Face layer boards are fixed horizontally with joints staggered in relation to the first layer. Vertical joints occuring on the apex of the curve in the face layer should be avoided. Additional studs may be required where multiple layers are specified to account for the difference which arises between inner and outer radii.

Services

Electrical and other services are normally installed after one side is boarded.

Performance

Fire resistance

There is no standard against which to test curved walls and linings, but adhoc testing has been carried out which confirms that a similar performance can be achieved to that claimed for the straight partition.

Impact resistance

Glasroc F MULTIBOARD offers the highest degree of impact resistance. It also has excellent mechanical properties, is not brittle and therefore is not prone to cracking or shattering when handled.

Degree of curvature

In common with other sheet materials, board ends have a tendency to remain straight. The minimum radius, therefore, will be influenced by the board characteristics, the length of curve, the support centres, and the occurrence of board joints.

Table 1 - Minimum bending radii and stud centres

Board type mm[2]	Thickness mm	Minimum radius[1] mm	Stud centres
Glasroc F MULTIBOARD	6	600	300
	10	2500	300
	12 (2 x 6)	600	300
	12.5	2700	300

[1] Concave or convex.
[2] For any radius 7000mm or more, studs can be installed at 600mm centres irrespective of board thickness.

Design

Planning

The positioning of vertical board joints on exposed board layers at the apex of the curve should be avoided. The positioning of all studs, therefore, needs to be determined at the design stage. Where straight runs occur within curved partitions or linings, stud centres can be increased as determined by the specification.

Fixing floor and ceiling channel

Gypframe 72 EDCL 80 CurveLiner Channel must be securely fixed to the structure with two lines of fixings located at 300mm centres in each row.

Deflection head

Deflection can be accommodated. Please contact the British Gypsum Drywall Academy for guidance.

Cavity fire barriers

Minimum 12.5mm Gyproc plasterboard, or 12.5mm Glasroc F MULTIBOARD, can be used to form a cavity closure within the partition to prevent the spread of fire or smoke.

Electrical

The installation of electrical services should be carried out in accordance with *BS 7671: 2008*. The cut-outs in the studs can be used for routing electrical and other small services.

Board finishing

Glasroc F MULTIBOARD joints are treated using Gyproc Joint Tape bedded in Gyproc Joint Cement. External angles / corners can be reinforced using Gyproc No-Coat Ultraflex 325 bedded in Gyproc Joint Cement. If a plaster finish is required, joints should be reinforced and Thistle Board Finish, Thistle Multi-Finish or Thistle Durafinish applied.

Construction details

1 Head detail

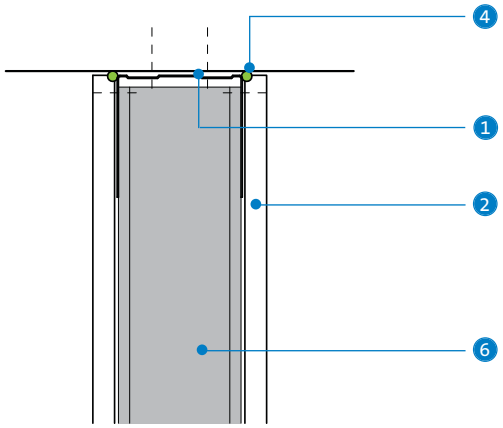

2 Base detail

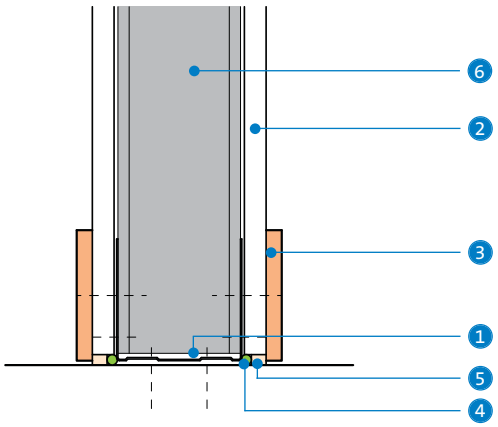

3 Deflection head for 15mm downward movement and up to 60 minutes fire resistance

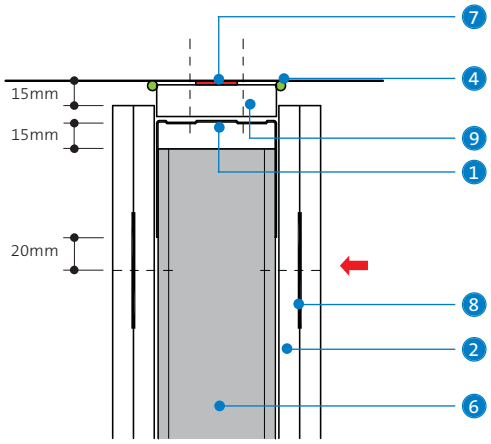

1. Gypframe 72 EDCL 80 CurveLiner Channel
2. Glasroc F MULTIBOARD
3. Skirting
4. Gyproc Sealant
5. Bulk fill with Gyproc jointing materials
6. Gypframe 'C' Stud
7. Gyproc FireStrip
8. Gypframe GFS1 Fixing Strap
9. 20mm Glasroc F FIRECASE cut to required curve

NB No fixings should be made through the boards into the flanges of the head channel. The arrow (⬅) denotes the position of the uppermost board fixing which should be made into Gypframe GFS1 Fixing Strap. Continuous Gyproc FireStrip must be installed as shown in order to maintain fire performance.

GypWall SECURE - Attack-resistant security wall system

GypWall SECURE is a robust but lightweight, non-loadbearing security wall, offering resistance to determined attack. It is used in commercial and industrial applications, such as partition walls in banks and building societies, custodial, retail, defence establishments, industrial and data storage areas.

Key benefits

- Lightweight compared to alternative masonry constructions
- Additional steel sheet can be installed for extra security
- Durable linings
- Highly resistant to determined attack
- Satisfies *BS 5234* strength and robustness requirements up to Severe Duty
- Only 70mm wall thickness
- 150 minutes fire resistance and good sound insulation

System components

Gypframe metal products

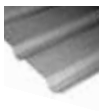

Security Sheet
Trapezoidal section steel sheet
1070mm x 3000mm x 0.7mm thickness
(1000mm cover)
Approx. weight 10kg/m²
Depth of section 30mm

GA4 Steel Angle
50mm x 25mm x 0.7mm
Length 3660mm

Metal products (by others)

Flat galvanised steel sheet (optional)
Thickness 0.7mm

Glasroc F board products

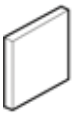

Glasroc F MULTIBOARD
Thickness 10mm
Width 1200mm

Fixing and finishing products

Gyproc Wafer Head Jack-Point Screws
For fixing lapped Gypframe Security Sheets together, and to fix optional flat galvanised steel sheet to Gypframe Security Sheet.

Gyproc Jack-Point Screws
For fixing boards to Gypframe Security Sheet.

Gyproc Sealant
Sealing air paths for optimum sound insulation.

Gyproc jointing materials
For seamless jointing.

Thistle Board Finish or Thistle Multi-Finish
To provide a plaster skim finish.

or

Thistle Durafinish 25kg
To provide improved resistance to accidental damage.

Performance

EN Table 1 – GypWall SECURE
Solutions to satisfy *EN 1364-1: 1999*

1

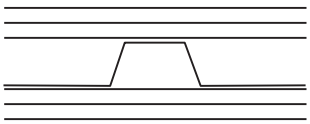

Two layers of 10mm Glasroc F MULTIBOARD each side of Gypframe Security Sheet.

Detail	Board type	Lining thickness mm	Partition thickness mm	Approx. weight kg/m²	Max. partition height[1] mm	Sound insulation R_w dB	Duty rating	System reference
30 minutes fire resistance EN								
1	Glasroc F MULTIBOARD	2 x 10	70	50	3700[2]	40	Severe	G100001
120 minutes fire resistance EN								
1	Glasroc F MULTIBOARD	2 x 10	70	50	3000	40	Severe	G100001

[1] The maximum heights quoted are limited by the fire state field of application or by limiting deflection of L/240 at 200Pa, whichever is the more onerous.
[2] Maximum recommended height is 3000mm based on using single sheets of Gypframe Security Sheet with no horizontal overlap. Heights of 3700mm are achievable - contact the British Gypsum Drywall Academy for guidance.

NB The fire resistance and sound insulation performances are for imperforate partitions, walls and ceilings incorporating boards with joints taped and filled, or skimmed according to British Gypsum's recommendations. The quoted performances are achieved only if British Gypsum components are used throughout, and the Company's fixing recommendations are strictly observed. Any variation in the specifications should be checked with British Gypsum.

BS Table 2 – GypWall SECURE
Solutions to satisfy *BS 476: Part 22: 1987*

1

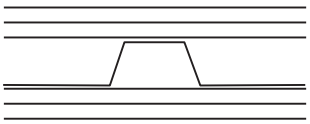

Two layers of 10mm Glasroc F MULTIBOARD each side of Gypframe Security Sheet.

Detail	Board type	Lining thickness mm	Partition thickness mm	Approx. weight kg/m²	Max. partition height[1] mm	Sound insulation R_w dB	Duty rating	System reference
150 minutes fire resistance BS								
1	Glasroc F MULTIBOARD	2 x 10	70	50	3700[2]	40	Severe	G100001

[1] The maximum height quoted is based on a limiting deflection of L/240 at 200Pa.
[2] Maximum recommended height is 3000mm based on using single sheets of Gypframe Security Sheet with no horizontal overlap. Heights of 3700mm are achievable - contact the British Gypsum Drywall Academy for guidance.

NB The fire resistance and sound insulation performances are for imperforate partitions, walls and ceilings incorporating boards with joints taped and filled, or skimmed according to British Gypsum's recommendations. The quoted performances are achieved only if British Gypsum components are used throughout, and the Company's fixing recommendations are strictly observed. Any variation in the specifications should be checked with British Gypsum.

Performance

Security
The excellent mechanical properties of Glasroc F MULTIBOARD, combined with the stiffness and resilience of Gypframe Security Sheet, make **GypWall SECURE** a formidable barrier to entry. It has a high resistance to 'determined attack' and vandalism using hand tools, and good resistance to attack using power tools.

Adhoc tests have been carried out at British Gypsum's Building Test Centre. A 'determined attack' by a team of four using hand tools did not achieve through penetration for approximately 10 minutes.

Where even greater resistance to attack is required, 0.7mm flat galvanised steel sheet (by others) should be fixed to the risk side of the security sheet prior to boarding.

Design

Planning - key factors
Service runs can be accommodated within the profile of the security sheet.

Services
Penetrations
Penetrations of attack resistant constructions for services need careful consideration to ensure that the performance of the element is not downgraded.

Electrical
Whilst services can be installed, these should be kept to a minimum. The installation of services should be carried out in accordance with the recommendations of *BS 7671: 2008*. Services are accommodated vertically within the profile of the sheeting. Service penetrations, horizontal service runs and socket outlets should always be avoided. Where practical, switch and socket boxes can be surface mounted without affecting the attack resistance of the wall.

Fixtures
Lightweight fixtures can be made directly into Glasroc F MULTIBOARD. Medium weight fixtures can be made through the lining into the 'high points' of the security sheet core.

Board finishing
Glasroc F MULTIBOARD joints are treated using Gyproc Joint Tape bedded in Gyproc Joint Cement. External angles / corners can be reinforced using Gyproc No-Coat Ultraflex 325 bedded in Gyproc Joint Cement. If a plaster finish is required, joints should be reinforced and Thistle Board Finish, Thistle Multi-Finish or Thistle Durafinish applied.

BlastWall - High performance blast refuge wall system

BlastWall offers resistance to explosive devices, such as car bombs, and can be specified in areas such as post rooms and blast refuge areas. The system has been tested and is approved by Government departments. Specifications are determined on an individual basis following consultation with British Gypsum and specialist blast design consultants as to the performance requirements.

FlameLyner - Industrial fire-resistant lining system

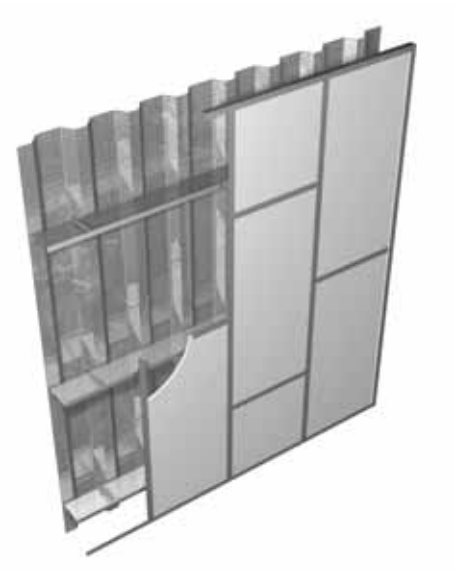

FlameLyner is used to line the external walls of steel framed industrial buildings. The system is often installed above a 2-3m high loadbearing block wall, where the wall is 1m or more from the relevant boundary as defined in national Building Regulations. It can be used in most types of industrial property, including factories, warehouses and industrial units.

Key benefits

- Satisfies insurance company requirements for enhanced fire performance
- Durable industrial lining
- Glasroc F FLAMELINE provides an exceptionally smooth surface
- Provides an inside sheeting rail lining
- Uses lightweight 'T' sections
- Provides a high level of fire resistance

System components

Gypframe metal products

GT1 Main 'T' — **Length** 3600mm

GT2 Cross 'T' — **Length** 603mm

Notched ends to snap into Main 'T' web.

GT3 Spring Wedge

Used for securing the board by engaging through cut-outs in the web of the 'T' sections.

GT4A and GT4B Bracing Straps — **Length** 300mm and 450mm respectively

Used for securing GT1 'T' sections to sheeting rails.

GT5 Internal Fixing Angle — **Length** 3000mm

Used for trimming joints.

Glasroc F board products

Glasroc F FLAMELINE

Thickness	6, 10mm
Width	600mm
Length	2400mm

Fixing and finishing products

Isover Modular Roll

80mm, for thermal and acoustic insulation (optional).

Stone mineral wool insulation (by others)

23kg/m³, for enhanced fire resistance.

System installation

Gypframe GT5 Internal Fixing Angle is installed at perimeters to trim and restrain the board edges. The angle is secured to the structure at 600mm centres using appropriate fixings. Gypframe GT1 Main 'T' section is located vertically to the inside of sheeting rails and secured to each sheeting rail using Gypframe GT4A or GT4B Bracing Straps (most appropriate length is selected).

Glasroc F FLAMELINE is installed by inserting a vertical edge into a Gypframe GT1 Main 'T' and securing with Gypframe GT3 Spring Wedges. The GT3 is engaged through cut-outs in the 'T' section web. A Gypframe GT2 Cross 'T' section is positioned to support the horizontal board end joint and the notched ends located into slots in the Main 'T's.

A further Main 'T' section is located and the board secured by inserting Gypframe GT3 Spring Wedges at 300mm centres. Stone mineral wool is installed between sheeting rails and behind the Main 'T' sections where fire resistance is a requirement. If thermal and / or sound insulation is required, Isover Modular Roll can be incorporated within the system. Main 'T's are extended by locating the notched end of one Main 'T' into the slotted end of another. Further framing members, insulation and lining boards are installed progressively to build up the wall lining.

NB Ensure that horizontal board end joints are staggered.

Performance

BS

Table 1 – FlameLyner
Solutions to satisfy *BS 476: Part 22: 1987*

Construction	Fire integrity minutes	System reference
10mm Glasroc F FLAMELINE in the **FlameLyner** grid retained by Gypframe GT3 Spring Wedges at 300mm centres. External steel sheeting minimum 0.55mm thick.[2]	120[1]	G31004
6mm Glasroc F FLAMELINE in the **FlameLyner** grid retained by Gypframe GT3 Spring Wedges at 300mm centres. 80mm stone mineral wool (nominal 23kg/m³) in cavity. External steel sheeting minimum 0.90mm thick.	120[1]	G31002

[1] Modified 120 minutes resistance when the inside of the wall is exposed to fire ('Modified' means the insulation requirement is reduced to 15 minutes minimum). This is acceptable when the external wall is 1m or more from the boundary.
[2] For improved standards of thermal and sound insulation Isover Modular Roll should be fitted within the system cavity.

NB Quoted performances are based on imperforate elements, constructed in strict accordance with the company's fixing recommendations using British Gypsum components.

Design

Fire resistance
The fire resistance requirements for an external wall are mainly dependent on its position in relation to adjacent buildings. Reference should be made to national Building Regulations and Approved Documents to ensure that the requirements can be fully satisfied. In situations where the structural steel frame of the wall construction incorporates steel columns that are not entirely within the cavity, the stanchions must be independently encased.

The specially designed Gypframe GT1 Main 'T' sections provide an allowance for linear expansion in the event of a fire. Up to 120 minutes fire integrity may be achieved using Glasroc F FLAMELINE as the lining. Adjacent Gypframe GT2 Cross 'T's should be staggered (refer to system isometric).

Cavity barriers
Cavity barriers may be required for the subdivision of cavities at 8m or 20m maximum spacings, depending on whether the class of surface exposed within the cavity is Class 0. Such cavity barriers can be provided by Glasroc F FLAMELINE screw-fixed to a suitable framework. Abutting edges of boards must be backed by steel sections to prevent the passage of smoke and flame. Alternatively, a wire-reinforced stone mineral wool blanket not less than 50mm thick can be used.

Fire-stopping
It is necessary to provide a suitable fire-stopping material at the junctions of cavity barriers with the external sheeting and the internal lining, and around any permitted holes in the cavity barrier for cables, services, etc.

Water vapour resistance
Precautions such as cavity ventilation may be necessary to reduce the risk of interstitial condensation. If the lining is to be subjected to excessively humid conditions, special provision such as sealing the lining boards and application of a suitable impervious paint treatment can be considered.

Durability
Where it is not possible to use brick / block or guard rails at low level (2m - 3m), it is advisable to use additional Gypframe GT1 Main 'T' and / or Gypframe GT2 Cross 'T's. This is achieved by reducing Gypframe GT1 Main 'T' centres to 300mm, and Gypframe GT2 Cross 'T' centres to 600mm. If lining boards are subject to damage they should be replaced.

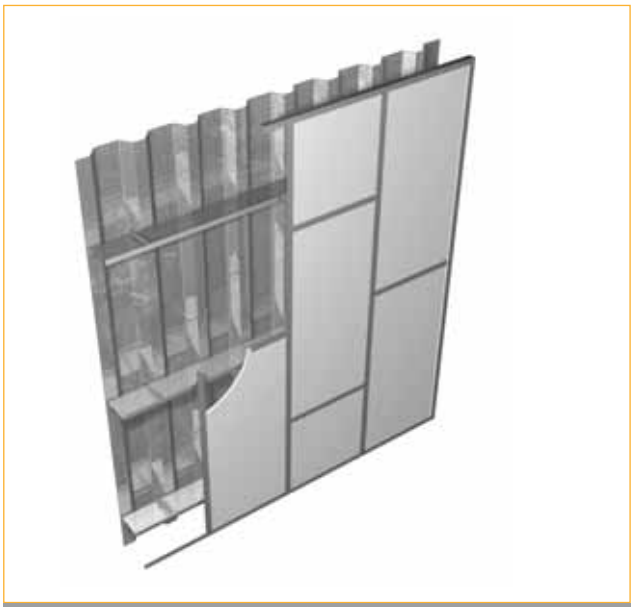

Staggered Gypframe GT2 Cross 'T's

Construction details

1 Base detail section

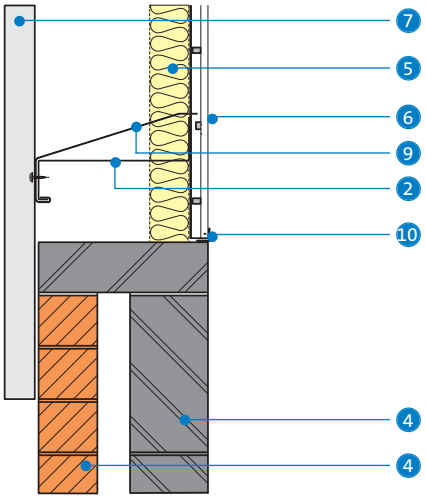

2 Intersection of wall and roof lining section

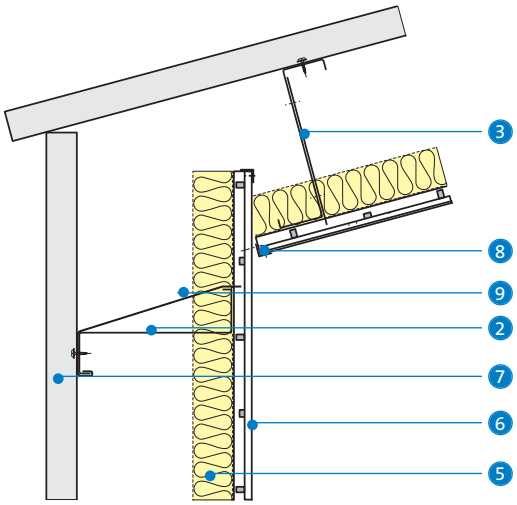

3 Wall lining abutment to **FireCase** column encasement plan

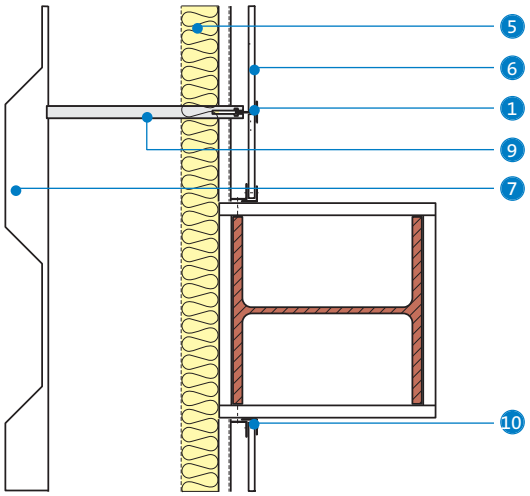

4 Gypframe GT3 Spring Wedge retaining Glasroc F FLAMELINE plan

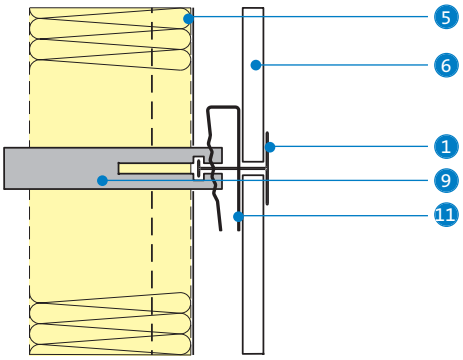

1. Gypframe GT1 Main 'T'
2. Sheeting rail
3. Purlin
4. Brick / block base
5. Insulation (stone mineral wool 23kg/m³ or Isover Modular Roll, depending on board thickness)
6. Glasroc F FLAMELINE
7. External cladding
8. Steel angle (by others)
9. Gypframe GT4A / GT4B Bracing Strap
10. Gypframe GT5 Internal Fixing Angle
11. Gypframe GT3 Spring Wedge

Cavity fire barriers

National Building Regulations require that cavities and concealed spaces in the structure or fabric of a building are sub-divided or sealed by means of cavity barriers or fire-stopping to restrict the hidden spread of smoke and flame. This is of prime importance since many buildings are honeycombed with concealed cavities and voids within the roof, floors, and walls.

Key benefits

- Required by Building Regulations
- Essential for life safety
- Metal or timber frame to suit
- Provide 30 minutes fire integrity
- Built in-situ or pre-formed to match the application

System components

Framing products

Gypframe 48 S 50 'C' Stud — **Length** 2400, 2700, 3000, 3600mm

Standard Floor & Ceiling Channels 50 C 50
Channel available in 3600mm only.

GA1 Steel Angle — **Length** 2900mm

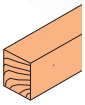

Timber framing (by others) — **Length** To suit

Glasroc F board products

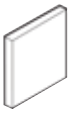

Glasroc F MULTIBOARD

Thickness	6, 10, 12.5mm
Width	1200mm

Fixing and finishing products

Gyproc Drywall Screws
For fixing boards to stud framing, up to 0.79mm thick.

Gyproc Drywall Timber Screws
For a positive direct fix of boards to timber joists.

Stone mineral wool
For perimeter fire stopping.

Performance

EN Table 1 – Cavity fire barriers
Solutions to satisfy *EN 1364-1: 1999*

1

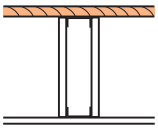

Gypframe 48 S 50 'C' Stud framework with studs at 600mm centres. Lining each side (as in table) fixed using Gyproc Drywall Screws at 300mm centres. Fire stopping material e.g. stone mineral wool to the perimeter as necessary. [1]

Detail	Board type	Lining thickness mm	Fire resistance Integrity minutes	Insulation minutes	System reference
1	Glasroc F MULTIBOARD	12.5	60	60	G106010

[1] See **Construction details – 1 and 2**.

NB The fire resistance and sound insulation performances are for imperforate partitions, walls and ceilings incorporating boards with joints taped and filled, or skimmed according to British Gypsum's recommendations. The quoted performances are achieved only if British Gypsum components are used throughout, and the Company's fixing recommendations are strictly observed. Any variation in the specifications should be checked with British Gypsum.

BS Table 2 – Cavity fire barriers
Solutions to satisfy *BS 476: Part 22: 1987*

1

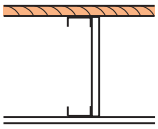

Gypframe 48 S 50 'C' Stud framework with studs at 600mm centres. Lining (as in table) fixed using Gyproc Drywall Screws at 300mm centres. Fire stopping material e.g. stone mineral wool to the perimeter as necessary. [1]

2

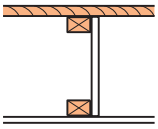

75 x 50 timber stud framework with studs at 600mm centres. Lining (as in table) fixed using Gyproc Drywall Timber Screws at 300mm centres. Fire-stopping material e.g. stone mineral wool to the perimeter as necessary. [1]

3

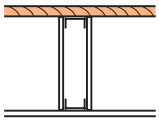

Gypframe 48 S 50 metal 'C' Stud framework with studs at 600mm centres. Lining each side (as in table) fixed using Gyproc Drywall Screws at 300mm centres. Fire-stopping material e.g. stone mineral wool to the perimeter as necessary. [1]

Detail	Board type	Lining thickness mm	Fire resistance Integrity minutes	Insulation minutes	System reference
1	Glasroc F MULTIBOARD	10	30	15	G110001
2	Glasroc F MULTIBOARD	10	30	15	G110002
3	Glasroc F MULTIBOARD	6	30	15	G110003

[1] See **Construction details – 1 and 2**.

NB The fire resistance and sound insulation performances are for imperforate partitions, walls and ceilings incorporating boards with joints taped and filled, or skimmed according to British Gypsum's recommendations. The quoted performances are achieved only if British Gypsum components are used throughout, and the Company's fixing recommendations are strictly observed. Any variation in the specifications should be checked with British Gypsum.

Installation overview

The procedure for fixing timber or metal framing to the ceiling / structure, and for fixing Gyproc and Glasroc F boards to form the cavity barrier, is in line with British Gypsum's normal drylining recommendations. Please refer to **GypWall CLASSIC** metal stud partitions and timber stud partitions earlier in this section.

Design

Planning - key factors

The maximum distance between barriers must be appropriate to the location of each cavity. Also, due consideration must be given to the class of surface exposed within the cavity.

It is also important that smoke and flames are restricted from passing from any cavity in a building element directly into a room or into another cavity. Therefore a cavity must be closed by a cavity barrier at every junction with another cavity. Any cavity contained within an element is also required to be closed by a cavity barrier around the perimeter of any opening through the element. The closure of cavities may already be provided by the construction itself, e.g. where a British Gypsum partition system prevents the continuation of cavities at a 'T' junction.

Smoke and flames must also be restricted from by-passing any building elements that are required to have fire resistance. Any cavity crossing the edges or ends of a fire resistant element should have a cavity barrier provided in the same plane as the element, see **Construction details – 3 and 4**. There are certain exceptions to this requirement such as cavities in floors and roofs where the ceilings provide a minimum of a full 30 minutes fire resistance in addition to satisfying other stipulated requirements.

Cavity barriers must maintain their performance during the life of a building, taking account of any possible building movement due to subsidence, shrinkage, or thermal change. In addition, the possible failure of its fixings or adjacent construction in the event of a fire, and the collapse in a fire of any permitted services penetrating the cavity barrier, should be considered.

Fire-stopping

A cavity barrier must be tightly fitted to rigid construction, or, if it abuts against slates, tiles, corrugated sheeting, or other construction to which it cannot be so fitted, then it must be suitably fire-stopped at the junction. See **Construction details – 1 and 2**, which show fire-stopping solutions using stone mineral wool.

Any services running through a fire cavity barrier should be fire-stopped using suitable materials, shown by test to maintain the fire resistance within that construction.

Construction details

1 Sub-division of ceiling void using timber framed cavity barrier

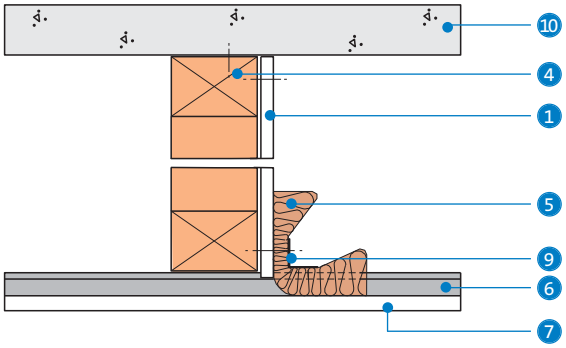

2 Sub-division of ceiling void using Gypframe metal framed cavity barrier

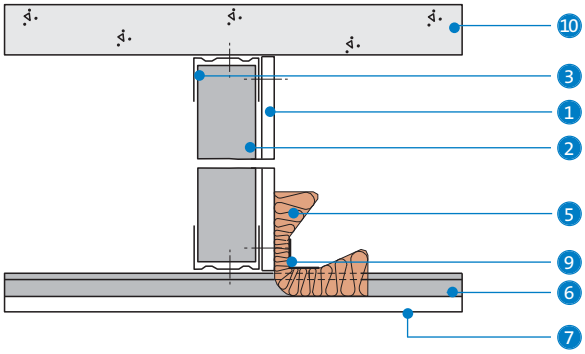

3 Sub-division or partition cavity

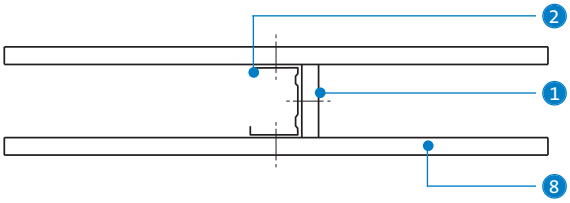

4 'T' junction detail

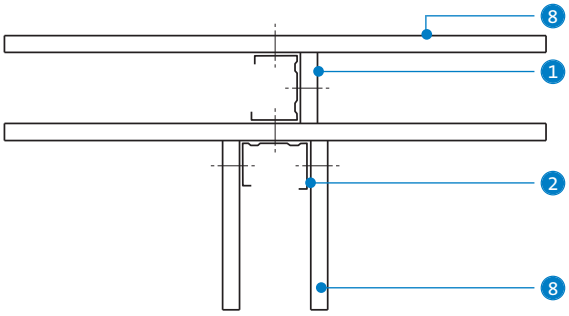

1. Glasroc F MULTIBOARD forming cavity fire barrier
2. Gypframe 'C' Stud
3. Gypframe Standard Floor & Ceiling Channel
4. Timber framing
5. Stone mineral wool fire-stopping
6. Proprietary grid ceiling
7. Ceiling lining
8. Partition lining
9. Gypframe GA1 Steel Angle
10. Concrete soffit

Timber ceiling membranes and compartment floors

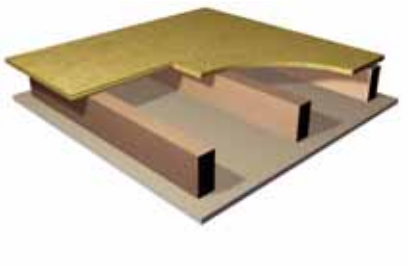

Ceilings to timber joist floors are an established form of ceiling construction, widely used in both new-build and refurbishment.

Key benefits

- Traditional and established method
- Versatile
- Use of Gyproc Drywall Timber Screws minimises fixing defects
- Can achieve high performance levels
- Quick and easy to install

System components

Glasroc F board products

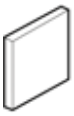

Glasroc F MULTIBOARD

Thickness	6, 10, 12.5mm
Width	1200mm

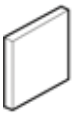

Glasroc F FIRECASE

Thickness	15mm
Width	1200mm

Fixing and finishing products

Gyproc Drywall Timber Screws or Glasroc F FIRECASE Screws
For a positive direct fix of boards to timber joists.

Gyproc Sealant
For sealing airpaths to achieve optimum sound insulation.

Fixing and finishing products

Gyproc jointing materials
For seamless jointing.

Thistle Board Finish or Thistle Multi-Finish
To provide a plaster skim finish.

or

Thistle Durafinish 25kg
To provide improved resistance to accidental damage.

Isover General Purpose Roll
For improved acoustic performance.

Stone mineral wool
For enhanced fire resistance.

Installation

Direct fix Glasroc F MULTIBOARD ceiling

Boards are fixed to ceilings, prior to lining walls and partitions, with the long edges at right angles to the joists. Cut-ends are located over a joist or timber nogging support. Timber noggings (where required) are fitted between joists at room perimeters to support board edges. Noggings may also be required to support board edges in the field of the boards. Boards are preferably fixed to timber supports using Gyproc Drywall Timber Screws, to minimise fixing defects.

Performance

EN

Table 1 – Timber joist compartment floors
Solutions to satisfy *EN 1365-2: 2000*

1

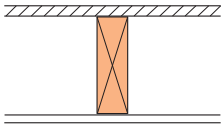

22mm t&g (softwood or chipboard) floor boarding over 38 x 195mm (minimum) timber joists at 600mm centres, with suitable timber noggings between joists to support board edges (where indicated). Linings as in table.

2

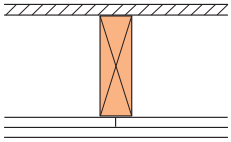

22mm t&g (softwood or chipboard) floor boarding over 38 x 195mm (minimum) timber joists at 600mm centres, with suitable timber noggings between joists to support board edges. Linings as in table.

3

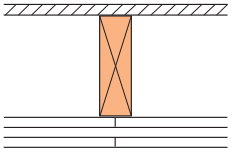

22mm t&g (softwood or chipboard) floor boarding over 38 x 195mm (minimum) timber joists at 600mm centres (maximum), with suitable timber noggings between joists to support board edges. Linings as in table.

Detail	Board type	Ceiling lining thickness mm	Noggings required[1]	Load ratio	System reference
30 minutes fire resistance EN					
1	Glasroc F MULTIBOARD	1 x 10	Yes	100%	G106036
60 minutes fire resistance EN					
2	Glasroc F MULTIBOARD	2 x 10	Yes	100%	G106022
90 minutes fire resistance EN					
3	Glasroc F MULTIBOARD	3 x 10	Yes	100%	G106037

[1] At perimeter and to support outer layer ceiling board joints (38 x 38mm minimum).

NB The fire resistance and sound insulation performances are for imperforate partitions, walls and ceilings incorporating boards with joints taped and filled, or skimmed according to British Gypsum's recommendations. The quoted performances are achieved only if British Gypsum components are used throughout, and the Company's fixing recommendations are strictly observed. Any variation in the specifications should be checked with British Gypsum. Where boards are fixed direct to timber joists, screw-fixing is the preferred alternative to nail-fixing and minimises the risk of fixing defects occurring.

Performance

Table 2 – Timber joist ceiling compartment floors
Solutions to satisfy *BS 476: Part 21: 1987*

1

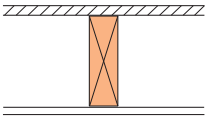

18mm t&g (softwood or chipboard) floor boarding over timber joists (min. 38mm) at 450mm centres with suitable noggings between joists to support board edges. Linings as in table.

2

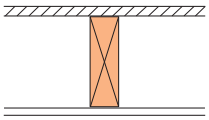

22mm t&g (softwood or chipboard) floor boarding over timber joists (min. 38mm) at 600mm centres with suitable noggings between joists to support board edges. Linings as in table.

3

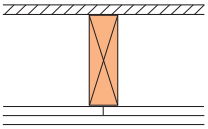

22mm t&g (softwood or chipboard) floor boarding over timber joists (min. 47mm) at 600mm centres with suitable noggings between joists to support board edges. Linings as in table.

4

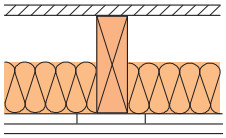

18mm t&g (softwood or chipboard) floor boarding over timber joists (min. 50mm) at 400mm centres. 30mm stone mineral wool (64kg/m³) in the cavity. Linings as in table.

5

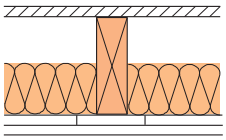

22mm t&g (softwood or chipboard) floor boarding over timber joists (min. 50mm) at 600mm centres with suitable noggings between joists to support board edges. 60mm stone mineral wool (23kg/m³) in the cavity. Linings as in table.

Detail	Board type	Ceiling lining thickness mm	System reference
30 minutes fire resistance BS			
1	Glasroc F MULTIBOARD	1 x 6	G104019
2	Glasroc F MULTIBOARD	1 x 12.5	G106021
60 minutes fire resistance BS			
3	Glasroc F MULTIBOARD	2 x 10	G106022
4	80mm wide Glasroc F MULTIBOARD strip + Glasroc F MULTIBOARD	10 + 10	G104024
5	80mm wide Glasroc F MULTIBOARD strip + Glasroc F MULTIBOARD	10 + 10	G106046
2	Glasroc F FIRECASE (screw-fixed)[1]	1 x 15	G106025

[1] Use 58mm Glasroc F FIRECASE Screws at 150mm centres. 38mm x 38mm timber noggings are also required between joists and at the perimeter to support board edges.

NB The fire resistance and sound insulation performances are for imperforate partitions, walls and ceilings incorporating boards with joints taped and filled, or skimmed according to British Gypsum's recommendations. The quoted performances are achieved only if British Gypsum components are used throughout, and the Company's fixing recommendations are strictly observed. Any variation in the specifications should be checked with British Gypsum. Where boards are fixed direct to timber joists, screw-fixing is the preferred alternative to nail-fixing and minimises the risk of fixing defects occurring.

Performance

Table 3 – Timber joist ceiling membrane
Solutions to satisfy *BS 476: Part 22: 1987*

1

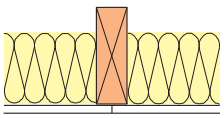

2

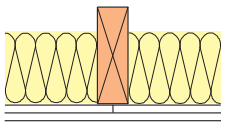

Timber joists (min. 38mm) or bottom chord of trusses (min. 35mm) at 600mm centres, with suitable timber noggings between joists to support board edges. Insulation laid between joists (see table). Linings as in table.

Detail	Board type	Ceiling lining thickness mm	Insulation type	System reference
30 minutes fire resistance BS				
1	Glasroc F MULTIBOARD	1 x 12.5	150mm Isover General Purpose Roll	G106041
60 minutes fire resistance BS				
2	Glasroc F MULTIBOARD	2 x 10	150mm Isover General Purpose Roll	G106042

NB Nominal 50mm x 25mm timber battens should be fixed to the side of timber supports where the ceiling boards butt in order to maintain an adequate bearing surface.

NB The fire resistance and sound insulation performances are for imperforate partitions, walls and ceilings incorporating boards with joints taped and filled, or skimmed according to British Gypsum's recommendations. The quoted performances are achieved only if British Gypsum components are used throughout, and the Company's fixing recommendations are strictly observed. Any variation in the specifications should be checked with British Gypsum. Where boards are fixed direct to timber joists, screw-fixing is the preferred alternative to nail-fixing and minimises the risk of fixing defects occurring.

Design

Planning - key factors
To minimise the risk of ceiling finish defects occurring, seasoned timber with a moisture content not exceeding that recommended in *BS 5268: Part 2: 1991* should be used. The contractor should ensure that timber supports are accurately spaced, aligned, and levelled. Gyproc Drywall Timber Screws are the preferred method of fixing.

Cavity fire barriers
Cavity barriers may be required to satisfy the requirements of national Building Regulations.

Strength and robustness
Timber should be aligned and level, and should meet the requirements of *BS 5268: Part 2: 1991*. The dimensions and assembly of timber supports should be sufficient to allow positive fixing of boards without bounce or undue deflection because of the screwing, or other applied force. When the above fixing conditions cannot be met, a timber batten should be securely fixed to the side of those timber supports where ceiling boards butt, in order to increase the bearing surface.

Where boards are fixed at maximum centres in adverse conditions the standard of lining can be affected. Adverse conditions can generally be described as conditions where high humidity occurs, principally in the cold, damp, autumn / winter period. They also refer to buildings under construction during this period where both the structure and wet applications such as plastering and screeding are subject to slow drying conditions.

Where a vapour control layer is included in the ceiling construction in conditions described previously, condensation can form on the vapour control surface. This can result in plasterboard becoming unduly damp, and affecting the standard of acceptability of the lining and any applied plaster or textured coating. In these circumstances increased ventilation or dehumidifiers is recommended.

Imposed loads
The designer should ensure that the floor construction is suitable to support any imposed loads.

Joist width
Where joist width is less than the minimum stated in **Tables 1 – 3** previously, the system may not meet its specified performance.

Where minimum fixing tolerances cannot be met e.g. the inadequate bearing surface afforded by 35mm width trussed rafters, 50mm x 25mm timber battens should be screw-fixed to the side of the joists where ceiling boards abut in order to extend the bearing surface (refer to **Construction detail – 2**).

Services
Electrical and other small service runs can be routed within the floor cavity. The installation of electrical services should be carried out to *BS 7671: 2008*, and the recommendations of the Institution of Electrical Engineers. Concealed cables may need earthed metallic covering, or to be enclosed in earthed conduit, trunking, or ducting to satisfy *BS 7671: 2008*.

Fixtures
Fixtures should be made into joists, or to supplementary timber.

Board finishing
Glasroc F FIRECASE or Glasroc F MULTIBOARD joints are treated using Gyproc Joint Tape bedded in Gyproc Joint Cement. External angles / corners can be reinforced using Gyproc No-Coat Ultraflex 325 bedded in Gyproc Joint Cement. If a plaster finish is required, joints should be reinforced and Thistle Board Finish, Thistle Multi-Finish or Thistle Durafinish applied.

Construction details

1 Reflected ceiling plan - single layer 12.5mm Glasroc F MULTIBOARD with joists at maximum 600mm centres

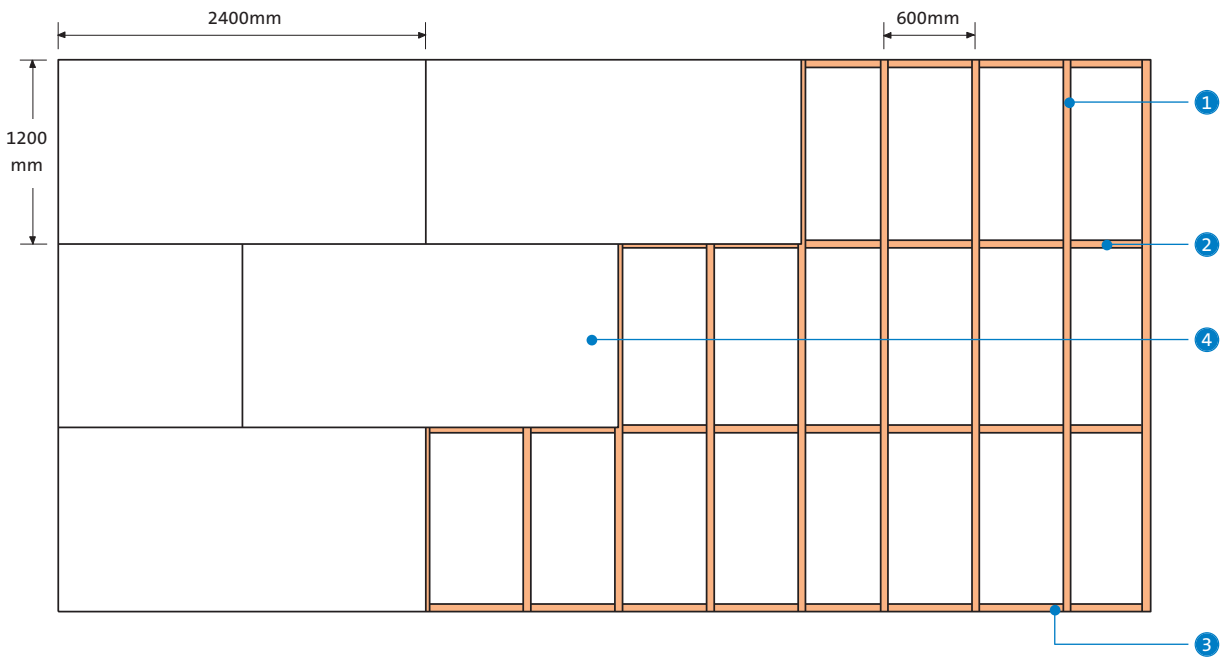

2 Increasing the bearing surface when fixing boards to trussed rafters

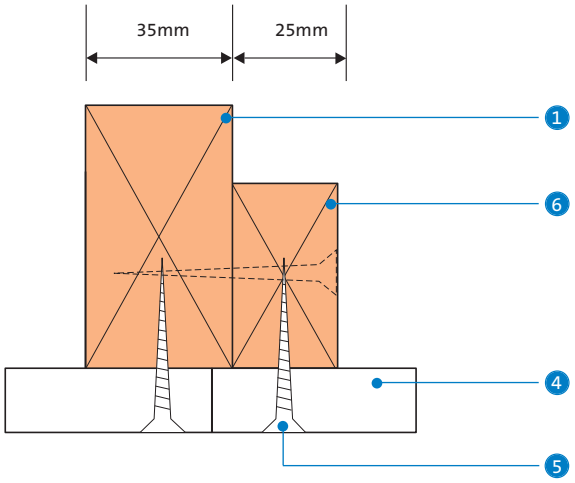

1. Timber joists
2. Noggings to support board edges
3. Noggings to provide support at the perimeter
4. Glasroc F MULTIBOARD
5. Gyproc Drywall Timber Screws
6. Timber batten (25 x 50mm)

Steel ceiling membranes and compartment floors

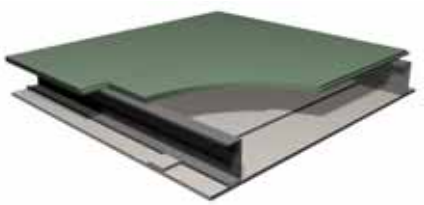

High performance steel joist mezzanine floor systems and corridor lid solutions, suitable for industrial applications.

Key benefits

- Provides high levels of fire resistance
- Monolithic appearance
- Durable ceiling lining
- Exceptionally smooth surface

System components

Framing products

Gypframe 146 TI 90 Tabbed 'I' Stud — **Length** 5000, 6000mm

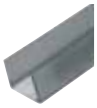

Extra Deep Flange Floor & Ceiling Channels 148 EDC 80
Channel available in 3600mm only.

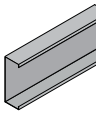

Structural steel joists and track (by others)

Glasroc F board products

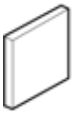

Glasroc F MULTIBOARD
Thickness 6, 12.5mm
Width 1200mm

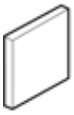

Glasroc F FIRECASE
Thickness 15mm
Width 600, 1200mm

Fixing and finishing products

Gyproc Wafer Head Jack-Point Screws
For metal-to-metal fixing boards 0.8mm thick or greater and Gypframe 'I' Studs greater than 0.55mm thick.

Gyproc Jack-Point Screws
For fixing boards to stud framing 0.8mm thick or greater and Gypframe 'I' Studs greater than 0.55mm thick.

Gyproc Sealant
For sealing airpaths to achieve optimum sound insulation.

Gyproc jointing materials
For seamless jointing.

Thistle Board Finish or Thistle Multi-Finish
To provide a plaster skim finish.

or

Thistle Durafinish 25kg
To provide improved resistance to accidental damage.

Installation

Direct fix Glasroc F MULTIBOARD or Glasroc F FIRECASE ceiling
Boards are fixed to ceilings with the long edges at right angles to the joists. Boards are fixed to the steel framework using Gyproc Jack-Point Screws.

Performance

Table 1 – Steel joist mezzanine floor
Solutions to satisfy *BS 476: Part 21: 1987*

1

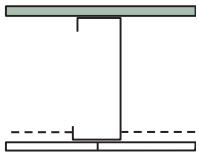

38mm Chipboard floor boarding over steel joists (min 200mm x 65mm x 2mm) at 600mm centres with 75mm wide x 15mm Glasroc F FIRECASE backing strips behind each transverse board joint.

Detail	Board type	Ceiling lining thickness mm	Maximum load ratio	System reference
60 minutes fire resistance BS				
1	Glasroc F FIRECASE	1 x 15	80%	G106056

NB The fire resistance and sound insulation performances are for imperforate partitions, walls and ceilings incorporating boards with joints taped and filled, or skimmed according to British Gypsum's recommendations. The quoted performances are achieved only if British Gypsum components are used throughout, and the Company's fixing recommendations are strictly observed. Any variation in the specifications should be checked with British Gypsum. Where boards are fixed direct to timber joists, screw-fixing is the preferred alternative to nail-fixing and minimises the risk of fixing defects occurring.

Table 2 – Steel stud ceiling membrane
Solutions to satisfy *BS 476: Part 22: 1987*

1

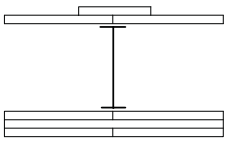

Gypframe 146 TI 90 Studs at 400mm centres with 6mm Glasroc F MULTIBOARD laid over the studs (not fixed). 70mm wide x 6mm Glasroc F MULTIBOARD strips behind the joints.

Detail	Board type	Ceiling lining thickness mm	Membrane thickness mm	Approx weight kg/m²	Max span[1]	System reference
120 minutes fire resistance BS						
1	Glasroc F MULTIBOARD	3 x 12.5	196	38	5600	G104033

[1] Based on a limiting deflection of L/400.

NB The fire resistance and sound insulation performances are for imperforate partitions, walls and ceilings incorporating boards with joints taped and filled, or skimmed according to British Gypsum's recommendations. The quoted performances are achieved only if British Gypsum components are used throughout, and the Company's fixing recommendations are strictly observed. Any variation in the specifications should be checked with British Gypsum. Where boards are fixed direct to timber joists, screw-fixing is the preferred alternative to nail-fixing and minimises the risk of fixing defects occurring.

NB Steel stud ceiling membranes should not be used for material storage or for access for personnel.

Design

Cavity fire barriers
Cavity barriers may be required to satisfy the requirements of the national Building Regulations.

Imposed loads
The designer should ensure that mezzanine floor constructions are suitable to support any imposed loads.

Services
Electrical and other small service runs can be routed within the floor cavity. The installation of electrical services should be carried out to *BS 7671: 2008*, and the recommendations of the Institution of Electrical Engineers. Concealed cables may need earthed metallic covering, or to be enclosed in earthed conduit, trunking, or ducting to satisfy *BS 7671: 2008*.

Fixtures / fittings
Fixtures should be made into joists, or to supplementary steel framework.

Board finishing
Glasroc F FIRECASE or Glasroc F MULTIBOARD joints are treated using Gyproc Joint Tape bedded in Gyproc Joint Cement. External angles / corners can be reinforced using Gyproc No-Coat Ultraflex 325 bedded in Gyproc Joint Cement. If a plaster finish is required, joints should be reinforced and Thistle Board Finish, Thistle Multi-Finish or Thistle Durafinish applied.

Construction details

1 Steel stud ceiling membrane perimeter detail with studs perpendicular to wall

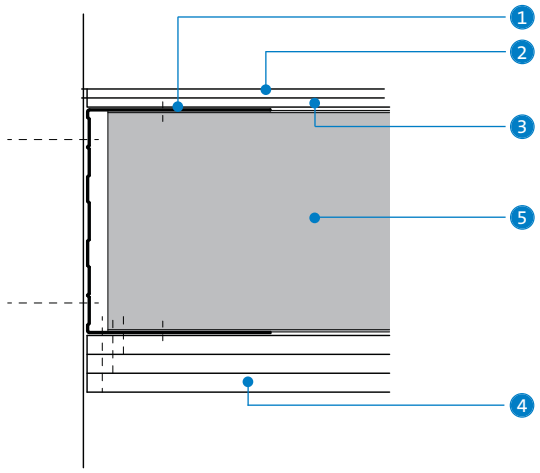

2 Steel stud ceiling membrane perimeter detail with studs parallel to wall

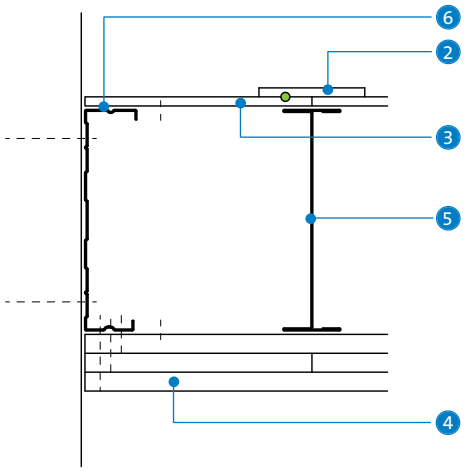

3 Mezzanine floor reflected plan

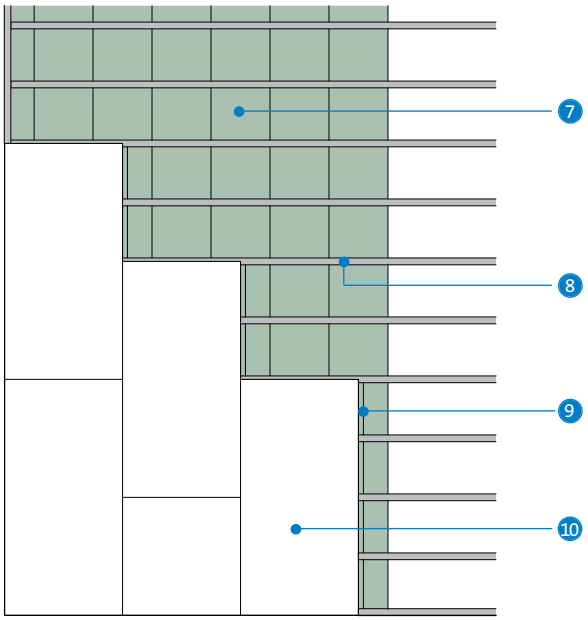

4 Mezzanine floor section

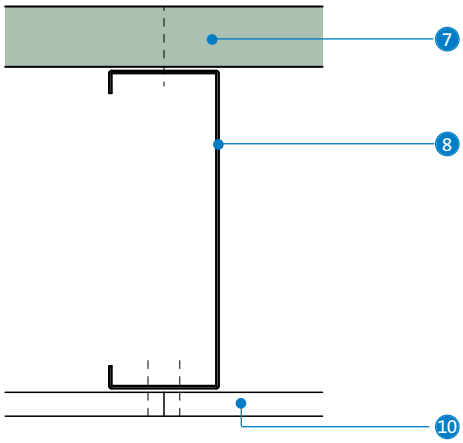

1. 148mm Gypframe Extra Deep Flange Floor & Ceiling Channel (EDC)
2. 70mm wide x 6mm Glasroc F MULTIBOARD bedded on Gyproc Sealant
3. 6mm Glasroc F MULTIBOARD
4. 3 layers of 12.5mm Glasroc F MULTIBOARD
5. Gypframe 146 TI 90 Tabbed 'I' Stud
6. 146mm Gypframe 'C' Stud
7. 38mm t&g chipboard
8. 200mm loadbearing steel at 600mm centres
9. 75mm wide strips of 15mm Glasroc F FIRECASE
10. 15mm Glasroc F FIRECASE

NB Construction details 3 and 4 - 15mm Glasroc F FIRECASE strips backing transverse joints. 75mm wide fixed at 230mm centres with 32mm Gyproc Drywall Screws.

CasoLine MF - Concealed grid MF suspended ceiling system

CasoLine MF is a suspended ceiling system suitable for most internal drylining applications. The grid is fully concealed and the ceiling lining is joint-treated or plastered to present a seamless, monolithic appearance.

Key benefits

- Monolithic appearance
- Suspension for concrete or timber floors
- Durable ceiling lining
- Ventilation ducts and other services accommodated in plenum
- Access panels provide services access
- Easy to create bulkheads and change levels

System components

Gypframe metal products

MF5 Ceiling Section — **Length** 3600mm
Secondary section below MF7.

MF6 Perimeter Channel — **Length** 3600mm
Perimeter support for MF5s.

MF7 Primary Support Channel — **Length** 3600mm
Primary support section.

MF8 Strap Hanger — **Length** 25m (coil)
Suspension of ceiling grid.
or

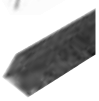

GA1 Steel Angle — **Length** 2900mm

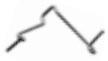

MF9 Connecting Clip
Fixing MF5 to MF7.

MF11 Nut and Bolt
Joining hanger to soffit cleat.

MF12 Soffit Cleat
Suspension point from structural soffit.

Glasroc F board products

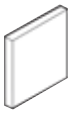

Glasroc F MULTIBOARD

Thickness	10, 12.5mm
Width	1200mm

Glasroc F board products (continued)

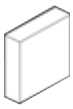

Glasroc F FIRECASE

Thickness	15mm
Width	1200mm

Fixing and finishing products

Gyproc Wafer Head Drywall Screws
For metal-to-metal fixing up to 0.79mm thick.

Gyproc Wafer Head Jack-Point Screws
For fixing hanger to Gypframe MF7 Primary Support Channel.

Gyproc Drywall Screws
For fixing boards to framing up to 0.79mm thick.

Gyproc Sealant
For sealing air paths for optimum sound insulation.

Gyproc jointing materials
For seamless jointing.

Thistle Board Finish or Thistle Multi-Finish
To provide a plaster skim finish.
or

Thistle Durafinish 25kg
To provide improved resistance to accidental damage.

Stone Mineral Wool
For enhanced fire resistance.

System installation

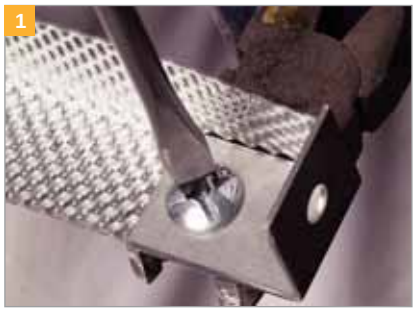

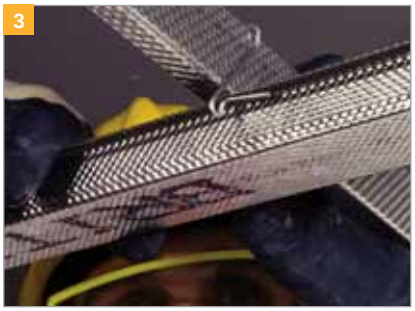

Suspension from concrete soffit

Gypframe MF6 Perimeter Channel is fixed to the wall at maximum 600mm centres, and Gypframe MF12 Soffit Cleats secured to the soffit at 1200mm centres, using appropriate fixings. Gypframe MF8 Strap Hanger or Gypframe GA1 Steel Angles are pre-cut and secured to the soffit cleats with Gypframe MF11 Nut and Bolt. Gypframe MF7 Primary Support Channels are installed over the Gypframe MF6 Perimeter Channels and secured to the hangers. Gypframe MF5 Ceiling Sections are run at right angles to the underside of primary channels to form the secondary grid. The ceiling sections are secured to the primary channels by Gypframe MF9 Connecting Clips or Gyproc Wafer Head Drywall Screws. Boards are fixed to the secondary grid to form single or multi-layer linings as specified.

Suspension from timber joists

The procedure is as for concrete except that soffit cleats are not required – hangers are twice fixed directly to the side of the joists.

Board fixings

Board fixings for Glasroc F boards should be at 150mm centres at board ends, 230mm centres within the field of the board.

Performance

Table 1a – CasoLine MF fire protection to timber floor constructions
Solutions to satisfy *EN 1365-2: 2000*

1

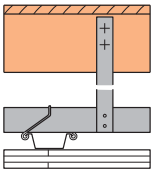

Floor boarding of 21mm minimum t&g softwood or wood particle floor boarding. Solid timber joists[1] 38 x 195mm at 600mm centres. **CasoLine MF** suspended ceiling fixed to joists. Ceiling linings as in table.

Detail	Board type	Ceiling lining thickness mm	Approx weight kg/m²	Maximum MF5 support centres mm	Maximum MF7 support centres mm	System reference
90 minutes fire resistance EN						
1	Glasroc F MULTIBOARD	3 x 10	30	450	1200	G106035

[1] Maximum permissible timber grade of 100% load ratio C24.

NB The fire resistance and sound insulation performances are for imperforate partitions, walls and ceilings incorporating boards with joints taped and filled, or skimmed according to British Gypsum's recommendations. The quoted performances are achieved only if British Gypsum components are used throughout, and the Company's fixing recommendations are strictly observed. Any variation in the specifications should be checked with British Gypsum.

Table 1b – CasoLine MF fire protection to timber floor constructions
Solutions to satisfy *BS 476: Part 21: 1987*

1

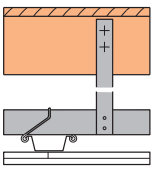

Floor boarding of 21mm minimum t&g softwood or wood particle floor boarding. Solid timber joists[1] 38 x 195mm at 600mm centres. **CasoLine MF** suspended ceiling fixed to joists. Ceiling linings as in table.

Detail	Board type	Ceiling lining thickness mm	Approx. weight kg/m²	Maximum MF5 support centres mm	Maximum MF7 support centres mm	System reference
120 minutes fire resistance BS						
1	Glasroc F MULTIBOARD	3 x 10	30	450	1200	G106035

[1] Maximum permissible timber grade of 100% load ratio C24.

NB The fire resistance and sound insulation performances are for imperforate partitions, walls and ceilings incorporating boards with joints taped and filled, or skimmed according to British Gypsum's recommendations. The quoted performances are achieved only if British Gypsum components are used throughout, and the Company's fixing recommendations are strictly observed. Any variation in the specifications should be checked with British Gypsum.

Performance

Table 2 – CasoLine MF fire protection to floor or roof cavity above suspended ceiling
Solutions to satisfy *EN 1364-2: 1999 or BS 476: Part 22: 1987*

1

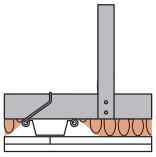

CasoLine MF suspended ceiling fixed to structure.
25mm stone mineral wool slabs (100kg/m³)
laid over Gypframe MF5 Ceiling Section.

Detail	Board type	Ceiling lining thickness mm	Maximum MF5 support centres mm	Maximum MF7 support centres mm	System reference
60 minutes fire resistance EN and BS					
1	Glasroc F FIRECASE	2 x 15	450	1200	G106040

NB The fire resistance and sound insulation performances are for imperforate partitions, walls and ceilings incorporating boards with joints taped and filled, or skimmed according to British Gypsum's recommendations. The quoted performances are achieved only if British Gypsum components are used throughout, and the Company's fixing recommendations are strictly observed. Any variation in the specifications should be checked with British Gypsum.

Table 3 – CasoLine MF fire protection to steel beams supporting concrete floors
Solutions to satisfy *BS 476: Part 23: 1987*

1

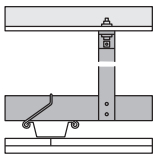

CasoLine MF ceiling suspended beneath steel beams
supporting a concrete floor. Lining as in table.

Detail	Board type	Ceiling lining thickness mm	Approx. weight kg/m²	Maximum MF5 support centres mm	Maximum MF7 support centres mm	System reference
60 minutes fire resistance BS						
1	Glasroc F MULTIBOARD	1 x 12.5	12	450	1200	G100036
120 minutes fire resistance BS						
1	Glasroc F MULTIBOARD	2 x 10	20	400	1200	G100038

NB The fire resistance and sound insulation performances are for imperforate partitions, walls and ceilings incorporating boards with joints taped and filled, or skimmed according to British Gypsum's recommendations. The quoted performances are achieved only if British Gypsum components are used throughout, and the Company's fixing recommendations are strictly observed. Any variation in the specifications should be checked with British Gypsum.

Design

Cavity barriers
Where cavity barriers are required, these can be formed using Glasroc F MULTIBOARD screw-fixed to a simple metal or timber frame. The framing should be fixed to the structure to avoid undue loading of the ceiling suspension grid or, alternatively, additional hangers should be incorporated to support the ceiling alongside the cavity barrier.

Ceiling lift in dwellings
The designer should give consideration to designing in a 'pressure relief' to minimise the risk of ceiling 'lift' in rooms with no permanent ventilation. This situation arises when a door is opened in a virtually leak proof room causing the lightest element in the room, normally the ceiling, to lift, creating a noise.

The change in the Building Regulations Part L air tightness requirements within dwellings may increase instances of ceiling lift, due to the increased air pressure when doors are opened. Whilst the noise this may create can be annoying to the occupier, it has no detrimental effect on the performance of the ceiling.

In such circumstances, British Gypsum recommends that the Gypframe MF5 Ceiling Section and Gypframe MF7 Primary Support Channel be fixed together using Gyproc Wafer Head Jack-Point Screws.

Suspension – Glasroc board linings
Fixing points for suspending the metal grid are required at 1200mm centres in each direction. Suitable fixing devices should be employed when fixing to the structure.

The ceiling grid can be suspended from a concrete soffit using Gypframe MF12 Soffit Cleats and Gypframe MF8 Strap Hanger, or alternatively, Gypframe GA1 Steel Angle. The latter provides a more robust suspension support which restricts any flexing of the lining when pressure is applied from below. Gypframe GA1 Steel Angle is thus the preferred suspension option when a plaster finish is specified to Glasroc F boards.

If Gypframe GA1 Steel Angle is used it can, if preferred, be fixed directly to the soffit rather than via Gypframe MF12 Soffit Cleats. The angle is cut and bent to fit as shown in **Construction details - 4**. For single layer boarding, where Gypframe GA1 Steel Angle is fixed direct, the Gypframe MF7 Primary Support Channel and Gypframe GA1 Steel Angles are fixed at 1200mm centres. For double layer ceilings the Gypframe GA1 Steel Angles are fixed at maximum 1200mm centres, but the Gypframe MF7 Primary Support Channels are closed down to 900mm maximum centres.

Partition to suspended ceiling junction
Tests on lightweight constructions have revealed the following:-

1. In situations where a **GypWall** metal stud partition, which must be securely fixed to the structure, penetrates **CasoLine MF**, the structural performance of the partition can be based on the floor to suspended ceiling height irrespective of the construction. Therefore, lightweight partitions which are required for space division in tall storey heights will be significantly strengthened by the ceiling system. Where **CasoLine MF** is installed on one side of the partition, only a slight loss of flexural strength will occur when any loading is applied.

2. The structural performance of a **GypWall** metal stud partition fixed to the framework of a **CasoLine MF** ceiling, or to noggings cut from Gypframe MF5 Ceiling Section set at 600mm centres, is equal to the performance of a metal stud partition of the same height fixed direct to the structural soffit.

Imposed loads
Table 4 provides loading data for the suspension grid for Glasroc F specialist boards, based on a limiting deflection factor of L/400. Maximum loads will be reduced by 25% from those shown where Gypframe GA1 Steel Angle is fixed directly to the soffit.

Table 4 - Maximum recommended loads on CasoLine MF grid with Glasroc board linings

Suspension point centres mm	MF7 channel centres mm	Maximum load including weight of board kg/m²
1200	1200	30
1200	900	40
1200	600	60
900	1200	35

NB Gypframe MF5 Ceiling Sections spaced at maximum 450mm centres.

Services
The plenum can be used to route all service requirements including ducting, pipework, electrical cables and conduit. The installation of electrical services must be carried out in accordance with *BS 7671: 2008*. Where light fittings, access panels and similar components are incorporated as part of the design requirements, consideration must be given to maintaining the integrity of the ceiling to meet fire resistance and sound insulation requirements.

Fixtures
Fixings to the system should always be made into the metal grid or to supplementary framing. Some adjustment of the primary grid may be required to support particularly heavy loads, see **Table 4**. Where loads outside this range are anticipated, independent suspension should be provided from the structure.

Control joints
Gyproc Control Joints may be required in the ceiling to relieve stresses induced by expansion and contraction of the structure. It is recommended that they coincide with movement joints within the surrounding structure.

Board finish
Glasroc F FIRECASE or Glasroc F MULTIBOARD joints are treated using Gyproc Joint Tape bedded in Gyproc Joint Cement. External angles / corners can be reinforced using Gyproc No-Coat Ultraflex 325 bedded in Gyproc Joint Cement. If a plaster finish is required, joints should be reinforced and Thistle Board Finish, Thistle Multi-Finish or Thistle Durafinish applied.

Construction details

1 Perimeter arrangement - Gypframe MF5 Ceiling Section

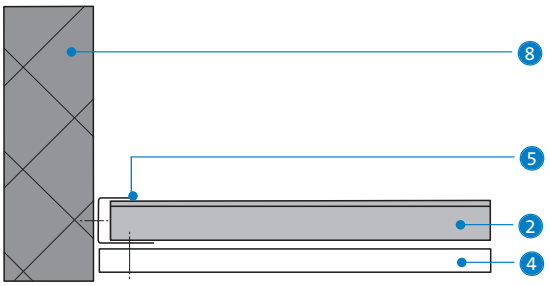

2 Perimeter arrangement - Gypframe MF7 Primary Support Channel

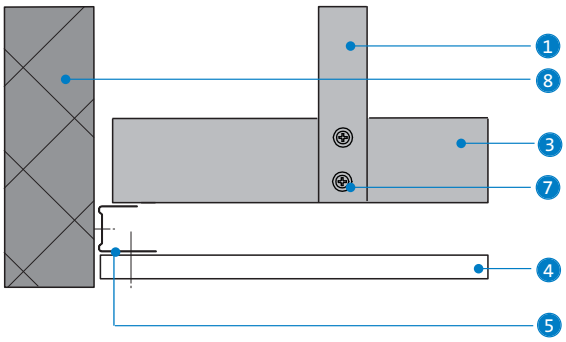

3 Clip fixing of Gypframe MF5 Ceiling Section

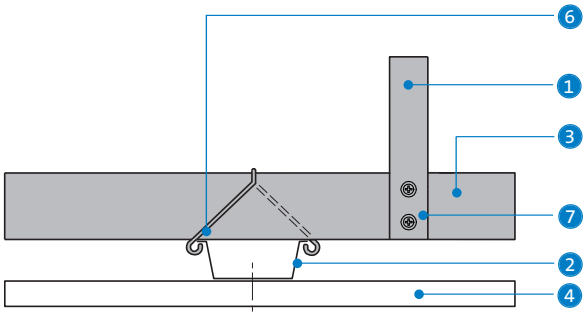

4 Pre-forming Gypframe GA1 Steel Angle for direct fixing to the structure

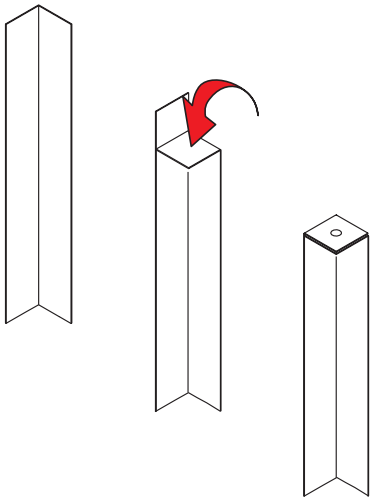

NB This method reduces the system's weight bearing capacity by 25%

1. Gypframe MF8 Strap Hanger or Gypframe GA1 Steel Angle
2. Gypframe MF5 Ceiling Section
3. Gypframe MF7 Primary Support Channel
4. Ceiling boards
5. Gypframe MF6 Perimeter Channel
6. Gypframe MF9 Connecting Clip
7. Gyproc Wafer Head Jack-Point Screw
8. Wall structure

Construction details

5 Bulkhead detail

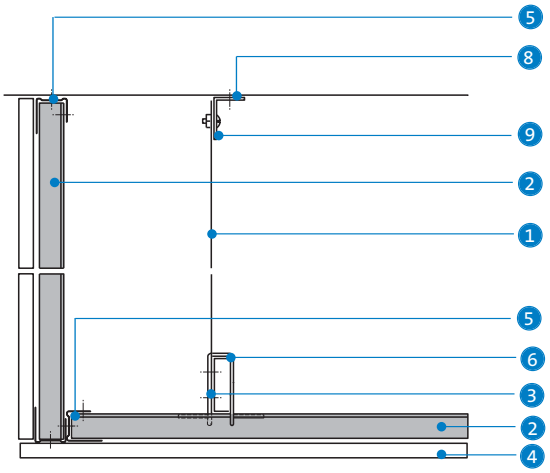

6 Change of level

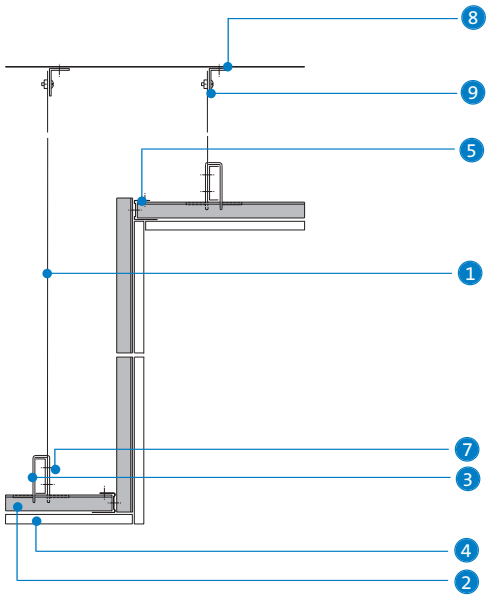

1. Gypframe MF8 Strap Hanger or Gypframe GA1 Steel Angle
2. Gypframe MF5 Ceiling Section
3. Gypframe MF7 Primary Support Channel
4. Ceiling boards
5. Gypframe MF6 Perimeter Channel
6. Gypframe MF9 Connecting Clip
7. Gyproc Wafer Head Jack-Point Screw
8. Gypframe MF12 Soffit Cleat
9. Gypframe MF11 Nut and Bolt

Westfield Shopping Centre, Derby

4 Appendices

Fire testing and certification	**130**
Fire research and testing at British Gypsum	130
Fire resistance furnace	130
Observations during the testing	131
Construction of specimens	131
Small scale fire resistance furnaces	131
Reaction to fire tests	131
UKAS accreditation	131
Fire testing liaison	132
Testing experience	132
Certification bodies and schemes	**133**
Association for Specialist Fire Protection (ASFP)	133
British Board of Agrément (BBA)	133
BM Trada	133
Firas	133
Loss Prevention Certification Board (LPCB)	134
British Standards Institution (BSI)	134
European Organisation for Technical Approvals (EOTA)	134
Useful contacts	**135**
Certification bodies	135
Testing bodies	135
Trade associations	136
Other sources	136
Glossary of fire terms	**137**

Fire testing and certification

Fire research and testing at British Gypsum

British Gypsum regards the contribution made by its products to the structural fire protection of buildings with the utmost importance. The Building Test Centre at East Leake in Leicestershire houses one of the most sophisticated fire resistance test furnaces in the UK, as well as small scales reaction to fire testing equipment.

The Building Test Centre operates as an independent test house and holds UKAS accreditation for a wide range of fire, acoustic and structural tests. Its stature has grown to the point where it is now one of the most highly respected testing facilities in the country.

Building Test Centre furnace

Fire resistance furnace

The furnace is one of the most flexible of its kind in the UK, with only the side walls permanently fixed. The end walls consist of refractory lined steel closers which can be moved as required. This enables walls and partitions up to a maximum of 5m high x 3m wide or floor and ceiling constructions up to 4m long x 3m wide to be tested using the same furnace. A system of hydraulic rams above the furnace provides loading for both horizontal and vertical specimens that need to be tested under load.

The furnace is fired by a maximum of 26 propane burners with automatic ignition from a remote console in the control room, and has a range of protection devices to ensure fail-safe operation.

Control of the furnace is completely automatic, and utilises two computers working in conjunction with each other. The first is the control which continually compares the actual furnace temperature with the time / temperature curve defined in the test standard, and automatically adjusts the gas and air supplies to the burners as necessary. Computer control gives much better approximation to the standard curve than the manual control of gas common on older furnaces, and is therefore reproducible. The pressure inside the furnace is simultaneously controlled by the computer, by opening and closing a damper in the exhaust flue. The second computer provides a backup to the main computer to prevent against any loss of data in the unlikely event of a failure.

The first computer also acts as the main data logger, which can record up to several hundred channels of data. This includes furnace and specimen temperatures, specimen deflection, applied load and furnace pressure. The data is stored in a format that allows graphs and tables to be quickly produced for inclusion in the test report.

Fire resistance test

Observations during the testing

In order to derive the maximum amount of information from each test, the specimens are monitored more closely than is required by the test standards. For example more thermocouples are used both inside and outside the test specimen. Continuous visual observations are made of the behaviour of the specimen from both the exposed and unexposed faces on every test, and the observers are helped if necessary by video equipment which records both what happened, and, most importantly, when it happened.

Construction of specimens

In order that the furnace can be used more fully, specimens to be tested are not built in the furnace but in frames in a nearby construction area. They are then moved into place using an overhead crane. A racking system allows several specimens to be stored while they await testing. This also permits the specimen to be removed from the furnace for inspection immediately after the test.

Ceiling specimens are constructed at a convenient height on a raised framework, which allows them to be built from the underside as they would be in practice.

Small scale fire resistance furnaces

There are two small scale (1m^2) fire resistance furnaces, one vertical and one horizontal, to carry out exploratory tests before using the full scale furnace.

Reaction to fire tests

The Building Test Centre has invested in the full range of new European reaction to fire test equipment and can offer the following Euroclass testing:

BS EN ISO 1182: 2002
Reaction to fire tests for building products – Non-combustibility test

BS EN ISO 1716: 2002
Reaction to fire tests for building products – Determination of the heat of combustion

BS EN 13823: 2002
Reaction to fire tests for building products – Building products excluding floorings exposed to the thermal attack by a single burning item

BS EN ISO 11925-2: 2002
Reaction to fire tests for building products – Ignitability of building products subjected to direct impingement of flame. Single flame source test

UKAS accreditation

The United Kingdom Accreditation Service (UKAS) is the UK's national accreditation body responsible for assessing and accrediting the competence of measurement, testing, inspection and certification of systems, products and personnel.

Subject to its stringent requirements, UKAS accredited laboratories are authorised to issue formal reports for specific types of measurements and tests. The Building Test Centre holds UKAS accreditation (No. 0296) for a wide range of BS, EN and ISO fire test methods, which means that test reports issued by the Building Test Centre carry the same weight as those from other accredited testing houses. The Building Test Centre can undertake tests on a commercial basis for other companies.

Fire testing liaison

The Building Test Centre is a founder member of the Fire Test Study Group (FTSG) which draws its membership from those UK laboratories which undertake fire tests primarily for building control purposes. The main aims of the group are to improve the quality of fire testing services, and achieve a common interpretation of all relevant standard test methods.

The laboratory is also a notified body for carrying fire tests to EN standards.

Testing experience

The fire resistance furnace at East Leake has now been in operation for more than twenty five years, in which time over 3,000 full scale fire tests have been carried out. This makes the Building Test Centre the most experienced in the world with regard to testing gypsum-based products and systems.

British Gypsum continues to build up a data bank of fire test performance information to make a major contribution to the development of new British, European and International standard fire tests and revisions to new tests.

The scale of investment in fire testing is a guarantee of British Gypsum's dedication to structural fire protection.

Certification bodies and schemes

Association for Specialist Fire Protection (ASFP)

ASFP is the foremost trade association for passive fire protection. It publishes a range of technical publications containing third party certificated systems such as fire protection to structural steelwork, penetration seals, fire rated and smoke outlet ductwork, and fire rated partitions. The ASFP is recognised in the Building Regulations Approved Document B.

British Board of Agrément (BBA)

The BBA is principally concerned with the testing, assessment and approval of products for the construction industry. This ensures the ready acceptance of the products concerned and their safe and effective use. Assessment by the BBA relates primarily to new or innovative products, for which no British Standard normally exists, and where architects and other building professionals will look for the assurance provided by Agrément Certificates.

The BBA issues Agrément Certificates which give an independent opinion of the performance of a product, component, material or system. All relevant performance factors are assessed. The manufacturers of products awarded an Agrément Certificate are subjected to quality control surveillance by the BBA or its agents during the period of validity of the Certificate. These Certificates are published documents, and are freely available in the public domain. The BBA is also authorised to issue European Technical Approvals (ETAs).

BM TRADA Certification

BM TRADA Certification Ltd is an independent, UKAS accredited, third-party certification body operating in the public and private sectors across a wide range of manufacturing and service industries. It provides certification services to *ISO 9000* and *ISO 14001* and operates a number of product conformity schemes, including QMark Fire Door Scheme. Its sister company, Chiltern International Fire, provides UKAS accredited fire resistance testing of doorsets and other fire safety engineering services. BM TRADA Technology Ltd, provides a wide range of research, project management, consultancy and technical and expert witness services to the building and allied industries.

Firas

Firas is an independent, third party accreditation and training scheme for installers of passive fire protection products and systems and is part of Warrington Fire Research Certification. All schemes are developed in a partnership of Firas with the trade association most representative of the installer's interest. Firas Accreditation Schemes cover the installation of a wide range of fire protection products including glass and glazing, steelwork protection, ducts and dampers, cavity barriers, penetration sealing systems, timber and steel doorsets.

Loss Prevention Certification Board (LPCB)

LPCB conducts certification and approval activities in the fire and security sectors and carries out product, systems and service approvals for companies worldwide. LPCB is governed by an independent board which includes representatives from industry, regulatory bodies, insurers, trade associations and end users, and is constituted so that no single interest predominates. In addition, technical panels prepare and maintain certification schemes in defined product areas. LPCB operates within the framework of the Loss Prevention Council (LPC), a leading international authority on loss prevention and control. LPC is supported by the Association of British Insurers and Lloyds, and aims to improve the protection of people and property by improving loss prevention practice.

British Standards Institute (BSI)

ISO 9000
ISO 9001, *ISO 9002* and *ISO 9003* have been adopted primarily to assure timely delivery of products and services which meet agreed customer requirements. The approach is to rely on the supplier's own management, generally referred to as his quality management system (QMS).

Kitemark
The Kitemark is an independent third party certification scheme for the assessment of product quality and safety. The Kitemark symbol indicates that the product conforms with the specifications within the scheme. The Kitemark is the UK's most widely recognised certification mark.

European Organisation for Technical Approvals (EOTA)

The EC Construction Products Directive introduced the concept of European Technical Approval (ETA) which is one of two types of technical specification, the other being a harmonised European Standard. All EC Member States have designated bodies to issue ETAs and these bodies form the EOTA. This has enabled a common approach to methods of working by the individual Member States. In the field of passive fire protection, EOTA has been given a mandate to develop two European Technical Approval Guidelines (ETAG); one for fire stopping and fire sealing products, and the other for fire protective products. Products that are not covered by CEN harmonised product standards will be able to obtain approval by the EOTA route.

Useful contacts

Certification bodies

British Board of Agrément (BBA)
Bucknalls Lane
Garston
Watford
WD25 9BA

Tel: 01923 665300
Fax: 01923 665301
www.bbacerts.co.uk

BM TRADA Certification
Chiltern House
Stocking Lane
Hughenden Valley
High Wycombe
Buckinghamshire
HP14 4ND

Tel: 01494 569700
Fax: 01494 569701
www.bmtrada.com

Certifire
Holmesfield Road
Warrington
Cheshire
WA1 2DS

Tel: 01925 444851
Fax: 01925 234962

Firas
Holmesfield Road
Warrington
Cheshire
WA1 2DS

Tel: 01925 630438
Fax: 01925 234962

Loss Prevention Certification Board (LPCB)
BRE Global
Bucknalls Lane
Watford
Hertfortshire
WD25 9XX

Tel: 01923 664100
Fax: 01923 664994
www.redbooklive.com

Testing bodies

Building Test Centre
British Gypsum
East Leake
Loughborough
Leicestershire
LE12 6NP

Tel: 01159 451564
Fax: 01159 451562

Bodycote Warrington Fire
Holmesfield Road
Warrington
Cheshire
WA1 2DS

Tel: 01925 655116
Fax: 01925 655419
www.warringtonfire.net

Building Research Establishment (BRE)
BRE Global
Bucknalls Lane
Watford
Hertfortshire
WD25 9XX

Tel: 01923 664000
www.bre.co.uk

Chiltern International Fire
Chiltern House
Stocking Lane
Hughenden Valley
High Wycombe
Buckinghamshire
HP14 4ND

Tel: 01494 569800
Fax: 01494 564895
www.chilternfire.co.uk

Darchem Flare
Stillington
Stockton-on-Tees
Cleveland
TS21 1LB

Tel: 01740 632778
Fax: 01740 632 911
www.darchem.co.uk

Trade associations

Association for Specialist Fire Protection (ASFP)
Tournai Hall
Evelyn Woods Road
Aldershot
Hampshire
GU11 2LL

Tel: 01252 357832
Fax: 01252 357831
www.asfp.org.uk

Passive Fire Protection Federation (PFPF)
Tournai Hall
Evelyn Woods Road
Aldershot
Hampshire
GU11 2LL

Tel: 01252 357841
Fax: 01252 357831
www.pfpf.org

Steel Construction Institute (SCI)
Silwood Park
Ascot
Berkshire
SL5 7QN

Tel: 01344 636525
Fax: 01344 636570
www.steel-sci.org

Gypsum Products Development Association (GPDA)
PO Box 35084
London
NW1 4XE

Tel: 020 7935 8532
Fax: 020 7935 8532
www.gpda.com

Construction Products Association (CPA)
The Building Centre
26 Store Street
London
WC1E 7BT

Tel: 02073 233770
Fax: 02073 230307
www.constructionproducts.org.uk

Association of Interior Specialists (AIS)
Olton Bridge
245 Warwick Road
Solihull
West Midlands
B92 7AH

Tel: 01217 070077
Fax: 01217 061949
www.ais-interiors.org.uk

Federation of Plastering and Drywall Contractors (FPDC)
1st Floor
8/9 Ludgate Square
London
EC4M 7AS

Tel: 02076 349480
Fax: 02072 489263
www.fpdc.org

Other sources

British Standards Institution (BSI)
389 Chiswick High Road
London
W4 4AL

Tel: 02089 969001
Fax: 02089 967001
www.bsigroup.co.uk

UKAS
21-47 High Street
Feltham
Middlesex
TW13 4UN

Tel: 02089 178400
Fax: 02089 178500
www.ukas.com

Fire Test Study Group (FTSG)
c/o Holmesfield Road
Warrington
Cheshire
WA1 2DS

Tel: 01925 655116
Fax: 01925 655419

Glossary of fire terms

Compartment wall
A fire resisting wall used to separate one fire compartment from another.

Composite beam
A beam comprising a steel I section connected via shear connectors to a reinforced concrete or composite floor slab where the steel section and floor slab are designed to act together.

Cotton pad
A cotton wool pad supported in a metal holder used to determine integrity failure.

Critical temperature
The temperature at which failure of the structural steel element is expected to occur against a given load level.

Design temperature
The temperature determined by calculation at which failure of the structural steel element is expected against a given load level at a particular location in a building.

Drylining
Creating a wall or ceiling lining using plasterboard as an internal finish instead of solid plaster treatment.

Drywall
A partition, separating wall or wall lining which uses plasterboard as a lining instead of solid plastering (can be skim plastered however).

Exposed face
The side of the element being tested that is exposed to the heating conditions of a fire.

Field of board
The surface of board (as opposed to the edges or ends).

Fire door
A door that provides fire resistance.

Fire protection material
Material or combination of materials applied to the surface of a steel member for the purpose of increasing its fire resistance.

Fire resistance
The ability of a test specimen of an element of building construction to maintain its function, expressed in times to failure against specified criteria, when subjected to standard heat, pressure and mechanical test conditions.

Fire separating element
A compartment wall, compartment floor, cavity barrier and construction enclosing a protected escape route and/or a place of special fire hazard.

Fixed partition
A partition which cannot be demounted without destroying, partially or totally, the integrity of the components.

Framed partition
A partition consisting of a continuously supported frame with facings or infillings. It may take the form of a stud and sheet, frame and sheet or frame and panel partition e.g. GypWall CLASSIC.

Gap gauge
A 25mm diameter or 6mm x 150mm steel rod used to determine integrity failure.

Glass mineral wool
Mineral wool manufactured from glass used for improved thermal or acoustic insulation e.g. Isover insulation.

GRG board
A gypsum board having a glass fibre reinforced core and continuous glass fibre membranes just below each surface e.g. Glasroc F FIRECASE and Glasroc F MULTIBOARD.

Gypsum
Calcium sulphate dihydrate ($CaSO_4.2H_2O$). A natural mineral deposit and the main raw material from which gypsum plaster is made.

Insulation performance
The ability of a test specimen of a separating element of building construction, when exposed to fire on one side, to restrict the temperature rise of the unexposed face to below specified levels.

Integrity performance
The ability of a test specimen of a separating element of building construction, when exposed to fire on one side, to withstand collapse and to prevent the passage through it of flames and hot gases and to prevent the occurrence of flames on the unexposed side.

Jointing
The process of using hand or mechanical systems for achieving a flush seamless surface on dry construction based on tapered edge plasterboard and applicable to walls and ceilings.

Load bearing capacity
The ability of a test specimen of a load bearing element to support its test load, where appropriate, without exceeding specified criteria with respect to the extent and rate of deformation.

Load bearing element
An element that is intended for use in supporting an external (applied) load in a building and maintaining this support in the event of a fire.

Masonry partition
A partition of brickwork or blockwork complete with any specified surface finishes such as a drylining or plaster.

Metal stud partition
A non-loadbearing partition consisting of a metal stud / channel framework and lined both sides with sheet materials such as plasterboard. This is a form of stud and sheet partition e.g. GypWall CLASSIC.

Nogging
Cross member between main members of a framed construction.

Passive fire protection materials
Materials which do not change their physical form on heating, providing fire protection by virtue of their physical or thermal properties.

Plasterboard
A building board, complying with *EN 520*, composed of a core of aerated gypsum plaster bonded between two sheets of strong paper e.g. Gyproc WallBoard.

Plate thermometer
A 100 x 100mm insulated thin steel plate to which a thermocouple is attached, used to measure the fire test furnace temperature(s).

Protected corridor/lobby
A corridor or lobby which is adequately protected from fire in adjoining accommodation by fire resisting construction.

Security partitions
Constructions specifically designed to be resistant to ballistic and physical attack and explosions, such as those from letter or car bombs e.g. GypWall SECURE or BlastWall.

Soffit
The underside of a building element, including semi-exposed situations.

Stone wool
Mineral wool manufactured from stone, used to improve fire resistance performance.

Stud
Vertical member in framed wall or partition.

Sustained flaming
Continuous flaming for a period of time greater than 10 seconds, used to determine integrity failure.

Test specimen
An element (or part) of building construction provided for the purpose of determining either its fire resistance or its contribution to the fire resistance of another building element.

Timber stud partition
A partition consisting of a timber frame lined on each side with materials such as plasterboard.

FIRECASE

frameless encasement system

FireCase frameless encasement system provides a high quality cladding to structural steel columns and beams, offering up to 120 minutes fire protection. The Glasroc F **FIRECASE** lining board provides a smooth, robust surface and there is no requirement to joint or apply a decorative treatment.

120 minutes fire protection to structural steelwork

Non-combustible system

Simple and quick to install

- **No costly steel preparation required**
- **Option of staple fixing for faster installation**
- **Minimal impact to other trades on site**
- **Covered by SpecSure® lifetime system warranty**
- **Covered by the Plasterboard Recycling Service**

SPECSURE LIFETIME SYSTEM WARRANTY

AWARDED FOR UK Superbrands 2008 QUALITY · RELIABILITY · DISTINCTION

British Gypsum SAINT-GOBAIN

BRITISH GYPSUM
A BUSINESS SUPERBRAND SINCE 2008

Gyproc, Thistle, Gypframe and Glasroc are all registered trade names of BPB United Kingdom Limited. Isover is a registered trade name of Saint-Gobain.

Proprietor: BPB United Kingdom Limited registered in England 734396, registered office Saint-Gobain House, Binley Business Park, Coventry, CV3 2TT, UK.

British Gypsum reserves the right to revise product specifications without notice. The information in this document was correct to the best of our knowledge at the time of publication. It is the user's responsibility to ensure that it remains current prior to use.

The information in this document is for guidance only and should not be read in isolation. Users should read and familiarise themselves with all the information contained in this document and ensure that they are fully conversant with the products and systems being used, before subsequent specification or installation.

For a comprehensive and up-to-date library of information visit the British Gypsum website at: www.british-gypsum.com

Technical enquiries
British Gypsum
Drywall Academy
East Leake
Loughborough
Leicestershire
LE12 6JT

Telephone: 0844 800 1991
Fax: 0844 561 8816
E-mail: bgtechnical.enquiries@bpb.com

Training enquiries: 0844 561 8810

www.british-gypsum.com

FM 52358

British Gypsum January 2011 FB-08-02