This publication includes updated information, added since it was first published in July 2009. Please see the WHITE BOOK update document for details.
Last updated 06/04/2011

THE WHITE BOOK

British Gypsum
SAINT-GOBAIN

Welcome to 11th edition of the British Gypsum **WHITE** BOOK

First published over 35 years ago, the **WHITE** BOOK is a comprehensive guide to everything we do. It contains a wide range of partitioning and lining solutions, specifications and products, as well as test substantiation data and installation details.

The construction industry is facing some of its biggest challenges for years - changes in regulations, greater focus on sustainable construction and value for money throughout the product lifecycle. As the industry continues to change, one thing remains a constant; you can rely on British Gypsum's expertise and product performance, whatever your needs, whatever your project.

So, just a few tips on how to get the most out of using the **WHITE** BOOK. If you are new to the publication, take a look at the how-to guide on page 4; it will help you find your way around.

At the front of the book, you will find a theory section focusing on the technical aspects of building. Basic principles, does exactly what it says, providing information and technical guidance on design and construction of all building types with technical support provided by our Drywall Academy. It makes the **WHITE** BOOK so much more than a simple manufacturer's manual.

To make sure you can access the most up-to-date specification information, the new **WHITE** BOOK is also available to view or download, in sections and full copy format, at any time of the day or night, completely free of charge from www.british-gypsum.com

I hope you find this new edition a useful, reliable companion. If you need any further advice, please don't hesitate to contact the Drywall Academy.

Jonathan Cherry
Manager, Drywall Academy

Contents

This section includes updated information, added since it was first published in July 2009. Please see the WHITE BOOK update document for details.
Last updated 05/07/2010

Section	Title	Page
1	**Navigation**	**4**
1.1	How to use this publication	4
1.2	System selector	6
2	**Introduction**	**8**
3	**Basic principles of system design**	**14**
3.1	Fire performance	15
3.2	Building acoustics	23
3.3	Thermal insulation and condensation	35
3.4	Robustness	43
3.5	Service installations	48
3.6	Standards	55
4	**Health and Safety**	**58**
5	**Sustainability**	**62**
6	**Partition and wall systems**	**66**
7	**Wall lining systems**	**250**
8	**Floor, ceiling and soffit systems**	**294**
9	**Steelwork encasement systems**	**378**
10	**Cavity fire barriers**	**400**
11	**Plaster systems**	**406**
12	**Loadbearing framed systems**	**416**

Section	Title	Page
13	**Finishing systems and decorative effects**	**466**
	Plaster skimming	466
	Jointing	472
	Tiling	480
	Decorative effects	488
14	**Products**	**492**
	Metal components	494
	Boards	506
	Fixings	522
	Plasterboard accessories	528
	Plasters and plaster accessories	536
	Decorative	542
	Access panels	546
	Ceilings	552
	Insulation	560
15	**Glossary**	**566**
16	**Index**	**570**

Gyproc, Thistle, Gypframe and Glasroc are all registered trade names of BPB United Kingdom Limited. Isover is a registered trade name of Saint-Gobain.

Proprietor: BPB United Kingdom Limited registered in England 734396, registered office Saint-Gobain House, Binley Business Park, Coventry, CV3 2TT, UK.

British Gypsum reserves the right to revise product specification without notice.

The information contained in this **WHITE BOOK** was, to the best of our knowledge, correct at the date of publication. For the very latest information, please refer to the online version of the **WHITE BOOK** (www.british-gypsum.com), which is updated on a regular basis, as advice and specifications are changed. It remains the sole responsibility of the user to ensure current information is used at all times. Please note that 3D drawings have been included in this publication, and whilst they provide a close representation of the products and systems, they are primarily intended for illustrative purposes only.

The information herein should not be read in isolation as it is meant only as guidance for the user, who should always ensure that they are fully conversant with the products and systems being used and their subsequent installation prior to the commencement of work. For further guidance on installation please refer to the British Gypsum **SITE BOOK**, available to download from www.british-gypsum.com

We advise that you read and familiarise yourself with all the information contained in this literature prior to the commencement of the work or specification. Also, please refer to our Product Data Sheets, available to download from www.british-gypsum.com

For a comprehensive and up-to-date library of information visit the British Gypsum website at: www.british-gypsum.com

How to use this publication

Performance selector

When specifying a partition, floor or ceiling, performance characteristics normally determine the solution.

The British Gypsum system selector (pages 6 and 7) has been designed with this in mind. Simply select the performance categories of interest to easily identify the British Gypsum systems that best satisfy the project requirements.

A brief explanation of the categories are given below:

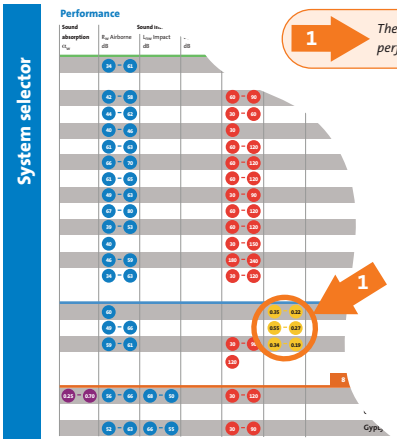

1 *The selector table shows the range of performances offered by each system.*

59 – 61 R_w dB | 30 – 90 mins | 0.34 – 0.19 W/m²K

0.45 – 0.65 **Sound absorption** – α_w

Absorption rating used to describe the acoustic characteristics of a product. Useful in controlling reverberation for speech clarity, music renditions, and within communal areas of apartments.

34 – 61 **Airborne sound insulation** – R_w and D_{ncw} dB

Level of sound insulation afforded by a construction to adjacent areas in terms of airborne noise transmission, i.e. speech or music.

68 – 50 **Impact sound insulation** – L_{nw} dB

Level of sound insulation afforded by a construction to adjacent areas in terms of impact noise transmission, i.e. footfall or furniture movement.

30 – 120 **Fire resistance** – minutes

Fire performance test results to the relevant European (EN) and British (BS) standards.

0.60 – 0.28 **Thermal performance** – U-value W/m²K

U-value indicates the level of energy loss through a particular building element. Calculated in accordance with *BR 443*.

▶ For further information on the above terms and other performance criteria, please refer to **section 3 - Basic principles of system design**.

Applications and sectors

Due to the flexibility of British Gypsum systems, they can be tailored to meet the requirements of a wide range of sectors and applications.

▶ Refer to System introduction pages.

2 *Applications and sector descriptions as displayed in system introduction.*

Selecting components

The system introduction pages give an overview of the components used within each British Gypsum system. Not all components will be used in all specifications, as some products are interchangeable depending upon performance requirements.

▶ Refer to System introduction pages and System components pages.

An illustration of the component and a brief description of its use and / or physical properties is included in the listing.

▶ Refer to System components pages.

3 *Indicative component locations within a constructed system.*

Performance tables

Each performance table details the performance levels that each specification achieves. This includes the following, where appropriate:

- Fire resistance
- Partition and lining thickness
- Acoustic performance
- Maximum partition height
- Duty rating
- Thermal performance

Within each system, solutions are primarily sorted by fire performance, then by partition thickness, as shown in the example below:

▶ Refer to Performance pages.

4 *The fire resistance test standard that applies to performances quoted on the page. This will either be an EN or BS standard.*

5 *Plan view drawings, located above each table, illustrate the composition of each specification.*

6 *Fire resistance is the primary sort for solutions.*

7 *Important notes, relating to the performances quoted in the table, are located at the bottom of each table.*

8 *Each specification has a number that corresponds with the plan view drawings located above each table.*

9 *Unique system references that can be quoted to British Gypsum in order to obtain performance substantiation reports.*

4 EN

Table 1a – GypWall ROBUST 70mm Gypframe 'C' Studs and AcouStuds - single layer board linings
Solutions to satisfy the requirements of *BS EN 1364-1: 1999*

SPECSURE LIFETIME SYSTEM WARRANTY

1 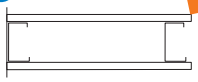

One layer of board each side of Gypframe 70 S 60 'C' Studs at 600mm centres. Linings as in table.

8 2 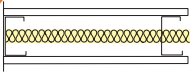

One layer of board each side of Gypframe 70 S 60 'C' Studs at 600mm centres. 25mm Isover APR 1200 in the cavity. Linings as in table.

3 5 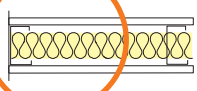

One layer of board each side of Gypframe 70 S 60 'C' Studs at 600mm centres. 50mm Isover APR 1200 in the cavity. Linings as in table.

4 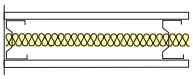

One layer of board each side of Gypframe 70 AS 50 AcouStuds at 600mm centres. 25mm Isover APR 1200 in the cavity. Linings as in table.

Detail	Partition thickness mm	Board type	Lining thickness mm	Max. partition height[1] mm	Sound insulation R_w dB	Duty rating	Approx. weight kg/m²	System reference
6 **60 minutes fire resistance** EN								
1	102	DuraLine	1 x 15	4000	42	Severe	29	Q606043
8 2	102	DuraLine	1 x 15	4000	47	Severe	29	9 Q606044

[1] The maximum heights quoted are limited by the fire state field of application or by limiting deflection of L/240 at 200 Pa, whichever is the more onerous.

7 NB The fire resistance and sound insulation performances are for imperforate partitions, walls and ceilings incorporating boards with all joints taped and filled, or skimmed according to British Gypsum's recommendations. The quoted performances are achieved only if British Gypsum components are used throughout, and the Company's fixing recommendations are strictly observed. Any variation in the specifications should be checked with British Gypsum.

System design construction details

At the end of each system section, additional design information and construction detailing is included.

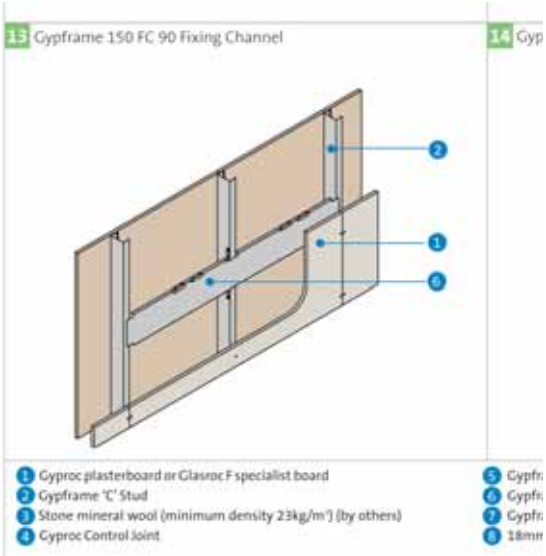

Products

Refer to the Products section for a listing of British Gypsum components used in this publication.

Section key

- KG - Approx. weight kg/m²
- R - Thermal resistance m²K/W
- S/E - Square edge
- T/E - Tapered edge

Included in the listings are product details such as dimensions, weights, thermal resistance (R-values), thermal conductivity (λ values), finish details and other useful information.

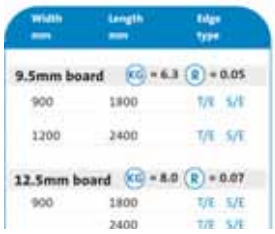

Performance						Title
Sound absorption α_w	Sound insulation R_w Airborne dB	Sound insulation L_{nw} Impact dB	Sound insulation D_{ncw} Airborne dB	Fire resistance minutes	Thermal performance W/m²K	
						6 Partition and wall systems
	34 – 61			30 – 120		GypWall CLASSIC
						GypWall CURVE
	42 – 58			60 – 90		GypWall ROBUST
	44 – 62			30 – 60		GypWall EXTREME
	40 – 46			30		GypWall RAPID dB Plus
	61 – 63			60 – 120		GypWall QUIET
	66 – 70			60 – 120		GypWall QUIET IWL
	61 – 65			60 – 120		GypWall QUIET SF
	49 – 63			30 – 90		GypWall STAGGERED
	67 – 80			60 – 120		GypWall AUDIO
	39 – 53			60 – 120		ShaftWall
	40			30 – 150		GypWall SECURE (including BlastWall)
	46 – 59			180 – 240		FireWall
	34 – 63			30 – 120		Non-loadbearing timber stud
						7 Wall lining systems
	60				0.33 – 0.17	DriLyner BASIC, TL, SI, MF, RF
	49 – 66				0.53 – 0.22	GypLyner UNIVERSAL
	59 – 61			30 – 90	0.33 – 0.17	GypLyner IWL
				120		FlameLyner
						8 Floor, ceiling and soffit systems
0.25 – 0.70	56 – 66	68 – 50		30 – 120		CasoLine MF
						CasoLine CURVE
	52 – 63	66 – 55		30 – 90		GypLyner UNIVERSAL
0.40 – 0.80			25 – 47			CasoLine GRID
	54 – 63	63 – 55		30 – 90		GypFloor SILENT
	64 – 71	54 – 43		60		GypFloor SB
						SoffitLine
						9 Steelwork encasement systems
				30 – 180		FireCase
				30 – 180		GypLyner ENCASE
						10 Cavity fire barriers
				30 – 60		Cavity fire barriers
						11 Plaster systems
				30 – 120		Plaster systems
						12 Loadbearing framed systems
	48 – 62			60	0.30 – 0.25	Steel framing systems
	35 – 63			30 – 120		Timber stud
	40 – 55			30 – 60	0.30 – 0.27	Timber frame
	36 – 66	78 – 48		30 – 90	0.25 – 0.13	Timber joist floors and ceilings

Description	Page
	66
The definitive metal stud partition system	66
Curved wall lining system	100
Durable impact resistant partition system	106
Ultimate impact and abrasion resistant partition system	124
Metal stud housing partition system	138
Acoustic separating wall system	150
Independent twin frame acoustic separating wall system	160
Single frame acoustic separating wall system	168
Staggered stud acoustic partition system	180
The ultimate sound insulating wall system	190
Shaft and duct encasement system	202
Attack-resistant security wall system	226
High performance fire-resistant wall system	232
Traditional internal partitions	240
	250
Drywall masonry lining systems	250
Metal framed wall lining system	266
Independent wall lining system	276
Industrial fire-resistant lining system	286
	294
Concealed grid MF suspended ceiling system	294
Concealed grid MF curved ceiling system	316
Concealed grid ceiling lining system	324
Suspended grid ceiling system	336
Sound insulating floor system	350
Floating floor treatment for residential separating floors	360
Thermal lining system for semi-exposed soffits	372
	378
Frameless structural steel encasement system	378
GypLyner framed structural steel encasement system	390
	400
Sub division of cavities in concealed spaces	400
	406
Undercoat / finish and one-coat systems for solid backgrounds	406
	416
Metsec steel frame systems with British Gypsum linings	416
Traditional stud walls with single or twin frames	430
Drylining to external timber frame walls	440
Ceilings and separating / compartment floors	448

SpecSure®

Unique to British Gypsum, the **SpecSure®** lifetime system warranty is designed to give you total confidence that the systems you have chosen will meet the most rigorous of building requirements.

All of our systems are developed using the highest quality components designed to work together, and are specially developed to give you a lifetime of confidence.

SpecSure® is more than just a performance warranty. It means that the British Gypsum systems you specify:

- Have a guaranteed lifetime performance.
- Have the technical expertise and experience of the UK's leading drywall specialists behind it.
- Have been tested in UKAS-accredited fire, acoustic and structural test laboratories.
- Have been site tested to demonstrate installation integrity and simplicity.
- Will be supported at every stage of the project by the UK's leading on and off-site technical support personnel.
- Will perform to published parameters throughout the life of each system.
- Will be repaired or replaced by British Gypsum in the unlikely event of system failure attributed to unsatisfactory product / system performance.

The highest quality components

We know how important it is to you that the systems you choose provide the best possible solution for your project. **SpecSure®** systems are designed using the highest quality components. Our products have been developed to work individually and together to deliver warranted performance systems you can rely on.

Plasterboard products

Our Gyproc plasterboard products have been developed over more than 90 years, providing proven lining solutions that help British Gypsum systems meet the fire, thermal, acoustic, impact and lifetime performance demands of any building.

Plaster products

Our world leading range of Thistle undercoat and finish plasters are unmatched for quality, consistency and on-the-wall performance. They provide the workability and high quality finish preferred by plasterers and building owners throughout the UK.

Metal products

Gypframe metal products provide the structural backbone of all British Gypsum systems. The range of metal studs, channels, angles, brackets and associated components, designed using the unique UltraSTEEL® process, is the widest and highest quality range of metal system components in the industry.

Specialist products

Glasroc F and Rigidur H specialist boards are unique in providing a range of high performance benefits. They also provide the basis for specialist fire protection, thermal insulation and steel protection systems for a range of buildings.

Ceiling products

Combining eye-catching design with stunning performance, our tiles, planks and boards bring design back to performance ceilings - providing unique solutions for buildings, from schools to offices and hospitals to residential developments.

Centre page: The Sage, Gateshead

Expertise

British Gypsum is part of Saint-Gobain, the largest manufacturer of plasterboard and gypsum plasters in the world. With more than 1400 companies worldwide and an annual turnover of over €40 bn, Saint-Gobain employs over 200,000 people across five separate industry sectors.

With over 90 years experience in providing innovative, cost-effective and reliable solutions that meet the demands of the construction industry, we've developed a leading range of wall, wall lining, floor, ceiling and encasement systems for buildings as diverse as houses, leisure complexes and high-rise commercial developments.

Working with building designers, contractors, and installers we have built a reputation as a leading innovator and expert in building acoustics and passive fire protection.

The Drywall Academy

We set up the British Gypsum Drywall Academy so that you could get even better results from our products. Every year it helps thousands of people improve their plastering, system building, drylining and product specification.

The Drywall Academy technical and training service provides the most comprehensive support package in the industry. From initial project design and planning right through to site installation and beyond, our specialist teams of technical experts, building technologists, building consultants and training personnel will provide all the support you need - including design advice and detailing, performance calculations, specification clauses and advice or training on system installation.

British Gypsum has been pioneering training for over 30 years, equiping merchants, contractors and our own employees with the latest industry skills. Training at the Drywall Academy is available through one of our three training centres making industry recognised training accessible and easy. With NVQ accreditation and ConstructionSkills recognition, we help to train around 6,000 professionals each year helping them gain specialist knowledge in all aspects of drylining.

Whether yours is one of the 10,000 calls a month to our technical advice line, or you need on-site support or full off-site training at one of our purpose-built or regional satellite training centres - we'll back you all the way.

Testing

British Gypsum pioneered the introduction of lightweight, fast-track building solutions in the UK and has had a huge impact on the residential and commercial built environment. Through extensive test programmes and on-site system development we have been able to create solutions that meet even the most rigorous British and European test standards.

Laboratory testing

The Building Test Centre's UKAS approved testing laboratories are the best-equipped and most advanced drywall testing facilities in Europe. Here, more than 10,000 tests and substantiation reports underpin the performance of drylining products and systems across the industry.

The Building Test Centre houses comprehensive fire, acoustic and structural test facilities, and have been developed specifically for testing partitions, ceilings and other drywall structures to both British and European test standards.

In addition to the quality of the testing facilities, many features of the laboratories, such as the 6 metre fire test furnace, full *BS 5234* duty testing suite, climatic testing suite and wall / floor intersection testing facilities are unique, ensuring that British Gypsum systems are the most comprehensively and accurately tested on the market.

Site testing

As well as comprehensive laboratory testing, we need to be sure that our systems not only perform to standard on site, but meet the installer's needs for speed and simplicity of installation.

Testing and proving on-site is therefore an integral part of the development process for every new British Gypsum system or system enhancement. A close working partnership with the UK's leading drywall and plastering contractors, housebuilders and major clients, enables us to carry out comprehensive site proving trials on our systems prior to launch.

With back-up support from the Building Test Centre's specialist acoustic mobile testing teams, we can then be sure that the claimed system performance can be achieved in even the most demanding site environments.

Centre page: Thistle Durafinish product testing

Environmental consideration

We recognise that manufacturing and construction are often perceived as making heavy demands on the environment. We have committed to minimise our impact on valuable natural resources, striving to provide products and systems that enable customers to build in a more sustainable and responsible way.

Sustainable development relies on the balancing of social, economic and environmental objectives. In any given construction project it is vital that all three pillars are considered in order to deliver a sustainable solution.

Social sustainability means we have a responsibility to identify the needs of individuals and consider their well-being. It is a respect for people, their health and safety, their development and their environment.

Our commitment to economic sustainability means we are best placed to deliver on our promises to our stakeholders and grow our business year on year. Good economic sustainability helps reduce operating and financial risk, improve efficiency, and ensures we are in a strong position to plan our investments and develop opportunities now and in the future.

Environmental sustainability is probably the most recognised aspect of sustainable development and one of the most difficult to manage effectively. British Gypsum is concerned with protecting and conserving both biodiversity and the environment.

We have introduced site environmental management systems certified to ISO 14001:2004 across all of our manufacturing sites, and, through our use of 97% recycled paper liners and predominantly by-product gypsum from power stations, we are actively helping to reduce atmospheric pollution whilst preserving valuable natural resources.

Every British Gypsum product and system is designed for minimum environmental impact, maximum energy efficiency, and minimum risk to health at every level. We actively work to sustain natural resources through our commitment to recycling.

Waste management

The total cost of waste is a lot higher than the cost of removal. As a result, British Gypsum works closely with customers to eliminate and reduce waste before it enters on to site.

Eliminate: Best practice design assistance at specification stage, ensuring systems are value engineered and developed to best suit on-site situations.

Reduce: Designing out waste in specifications, using bespoke board sizes and metal, on-site technical support and developing new building practices.

Reuse: Toolbox talks on best practice use of board types and sizes; making off-cuts easier to use on site.

Recycle: Our Plasterboard Recycling Service offers the collection of all British Gypsum plasterboard, cove, gypsum based ceiling tiles and glass-reinforced gypsum from site.

Plasterboard Recycling Service

British Gypsum leads the UK drywall industry in recycling plasterboard waste, reducing the pressure on landfill and preserving gypsum reserves. We are the only gypsum company with dedicated plasterboard recycling facilities. The British Gypsum Plasterboard Recycling Service is responsible for recycling over 75% of all the plasterboard waste recycled into new plasterboard in the UK.

We have invested heavily to expand the availability of our service, which not only significantly reduces waste handling costs and saves precious raw materials, but also improves site safety for the contractor through better site housekeeping.

We have also been instrumental in the development of the Ashdown Agreement working with the GPDA[1] and WRAP[2], delivering a voluntary commitment by UK plasterboard manufacturers to significantly reduce, and ultimately eliminate, plasterboard manufacturing waste to landfill.

[1] Gypsum Products Development Association.
[2] Waste Resources Action Programme.

Centre page: Wastecycle waste management centre, Colwick

3 Basic principles of system design 14

3.1 Fire performance 15

3.2 Building acoustics 23

3.3 Thermal insulation and condensation 35

3.4 Robustness 43

3.5 Service installations 48

3.6 Standards 55

Overview

This section is intended to provide guidance to the specifier on the basic principles of system design. It considers, in turn, the various aspects of performance both from a building theory and practical guidance perspective. In considering fire protection, for example, it highlights the passive and active options, the structural fire precautions to be taken, compartmentation and the risks of external fire spread. It reviews the insurance issues, explains how gypsum products provide in-built fire protection, looks at fire testing and terminology, and gives design solutions for cavity barriers.

Another key design aspect is how the drylined building element interacts with the associated structure. If this is ignored the performance of the element can be completely nullified. The key factors are covered including gap sealing, why it is preferable to take partitions through to the structural soffit and why it is important to design out flanking sound transmission.

In practice, the drylined element will need to be fully compatible with building services - electrical, heating and ventilation, plumbing, etc. This means that service installation should be fully assessed at the design stage to ensure that the layout of services is compatible with the ceiling module or location of stud work. Proprietary access panels can be specified at locations where access for maintenance is required.

The installed system must be able to support the weight of fixtures and fittings. Tables are presented giving recommendations on appropriate fixing devices in respect of specific British Gypsum systems.

Finally, it is important that design is considered within a wider Health and Safety perspective. Please refer to **section 4 - Health and Safety**.

This section includes updated information, added since it was first published in July 2009. Please see the WHITE BOOK update document for details.
Last updated 21/01/2011

This section includes updated information, added since it was first published in July 2009. Please see the WHITE BOOK update document for details.
Last updated 21/01/2011

3.1 Fire performance

3.1.1 Legislation, guidance and insurance

Building Regulations – Fire Safety
Building Regulations Approved Document B (AD B) is one of a series of documents approved by the Secretary of State as practical guidance on meeting the requirements of Schedule 1 and Regulation 7 of Building Regulations 2000 (England and Wales). AD B Volume 1 covers dwelling houses and AD B Volume 2 covers buildings other than dwelling houses. Scotland is covered by Technical Handbook 2, Domestic and Non-domestic.

The documents classify the use of a building into purpose groups and specify minimum periods of fire resistance to be achieved by the building elements. The periods of fire resistance vary according to the use and the size of building. The greater the fire hazard a building presents then the greater the period of fire resistance required to protect the elements within the building. The materials used to form the internal surfaces of the building are also controlled to reduce the risk of fire growth and internal fire spread.

HTM 05 Firecode – Healthcare Buildings
Hospitals and healthcare environments, by their very nature, contain people who are at risk from fire. The recommendations given in the suite of HTM 05 Firecode includes internal fire spread, elements of structure, compartmentation, fire hazard areas, hospital streets, penetrations, protected shafts, ceiling membranes, cavity barriers and fire-stopping.

Building Bulletin 100 (BB100) - Educational Buildings
The design of fire safety in schools is covered by BB100. Building Regulations will typically be satisfied where the safety guidance in BB100 is followed.

Loss Prevention Council (LPC) Design Guide for the Protection of Buildings – Commercial and Industrial
Provides guidance on the general principles of passive fire protection - contribution to fire growth, fire resistance, compartmentation and external fire spread. It presents insurers with standards of fire protection for industrial and commercial buildings and is intended to assist building designers and other professional advisors in reconciling the provisions of national legislation standards with the recommendations of the insurance industry. It also gives guidance regarding how fire protection measures can be used to augment passive protection.

Fire Protection for Structural Steel in buildings, ASFP Yellow Book
Publication prepared by the members of the Association for Specialist Fire Protection (ASFP). Presents the theory behind, and methods for, fire protection of structural steelwork to comply with Building Regulations. It provides a comprehensive guide to proprietary materials and systems all of which are manufactured, marketed or applied on site by members of ASFP.

3.1.2 Principles of fire performance

Fire growth
The choice of materials for walls and ceilings can significantly affect the spread of fire and its rate of growth, even though they are not likely to be the materials first ignited. The specification of linings is particularly important in circulation spaces where surfaces may offer the main means by which fire spreads, and where rapid spread is most likely to prevent occupants from escaping. Two properties of lining materials that influence fire spread are the rate of flame spread over the surface when it is subject to intense radiant heating, and the rate at which the lining material gives off heat when burning. AD B gives guidance on the classification of linings. The following table is taken from AD B Volume 2:

Table 1 - Classification of linings

Location	National class[1]	European class[1 3 4]
Small rooms[2] of area not more than: a. 4m² in residential accommodation b. 30m² in non-residential accommodation	3	D-s3, d2
Other rooms[2] (including garages)	1	C-s3, d2
Circulation spaces within dwellings		
Other circulation spaces, including the common areas of blocks of flats	0	B-s3, d2

[1, 2, 3, 4] - Please refer to AD B Volume 2 for explanation.

A detailed explanation of the relevant classifications is given later in this section.

Compartmentation
The spread of fire within a building can be restricted by sub-dividing it into compartments separated from one another by walls and / or floors of fire resisting construction. Two key objectives are:

- To prevent rapid fire spread, which could trap occupants in the building.
- To reduce the chance of fires becoming large, which are more dangerous - not only to occupants and fire service personnel, but also to people in the vicinity of the building.

Loaded timber stud wall failing in respect of loadbearing capacity

The appropriate degree of sub-division depends on:

- The use and fire loading of the building, which affects the potential for fires and their severity, as well as the ease of evacuation.
- The height to the floor of the top storey in the building, which is an indication of the ease of evacuation and the ability of the fire service to intervene effectively.

Structural fire precautions

Premature failure of the structure can be prevented by the provision for loadbearing elements to have a minimum period of fire resistance to failure of loadbearing capacity. The purpose in providing the structure with fire resistance is:

- To minimise the risk to the occupants, some of whom may have to remain in the building for some time (particularly if the building is a large one), while evacuation proceeds.
- To reduce the risk to fire fighters engaged on search and rescue operations.
- To reduce the danger to people in the vicinity of the building who may be hurt by falling debris, or because of the impact of the collapsing structure on other buildings.

Fire limit state

In structural design terms, fire is considered to be an accidental limit state, i.e. an accidental occurrence, and one for which the structure must not collapse. Loads and their factors of safety used in design at the fire limit state reflect the low probability of occurrence.

Typically, structural members that are designed to be fully stressed under normal conditions would be subject to a load ratio of 0.5 to 0.6 under fire conditions. Within this book loadbearing floors and partitions are quoted with respect to a stated load ratio. Many constructions have been tested at a conservative load ratio of 1.0 (100%) despite the fire state being an accidental load.

Structural behaviour of timber in fire

Timber has a low thermal expansion coefficient, which minimises the possibility of protective layers and charred materials becoming displaced. It also has a low thermal conductivity, which means that undamaged timber immediately below the charred layer retains its strength. Generally, it may be assumed that timber will char at a constant rate when subjected to the standard heating conditions of the test furnace. The rate of reduction in the size of structural timber can be taken as 15mm to 25mm (depending on species) in 30 minutes for each face exposed, different rates apply where all faces are exposed. The undamaged timber can be assessed for structural stability using standard design guides in conjunction with stress modification factors.

For partitions tested with high load ratios it should be noted that when the timber is exposed to fire, the exposed face will shrink causing differential thermal movement. This can be important for axially loaded sections, as it introduces a degree of eccentricity, which may cause a loss of loadbearing capacity.

Charred timber joists after a test

Structural behaviour of steel in fire

Steel generally begins to lose strength at temperatures above 300°C and eventually melts at about 1500°C. Importantly for design, the greatest rate of strength loss is in the range of 400°C to 600°C.

Using fire design codes such as *BS 5950-8* or the Structural Eurocodes *EC3-1.2* and *EC4-1.2* (designated *ENV 1993-1.2* and *ENV 1994-1.2*), the load on the structure at the time of the fire can be calculated by treating it as an accidental limit state. If used, this will allow designers to specify to the fire protection contractor a limiting or failure temperature for a given structural section. The fire protection contractor will then be able to use the required thickness of material to ensure that the steel section does not exceed this temperature within the fire resistance period. This process could be simplified by the designer specifying a maximum steel temperature, based on the worst case, for all beams or columns on one floor level.

Buildings that are not primarily used for storage, e.g. offices, residential units, schools and hospitals, have a high percentage of non-permanent loads. For this type of building, the structural codes *BS 5950-1* and *ENV 1991-1-1* assume that a proportion of the design load will not be present at the time of the fire. Other types of buildings, such as warehouses and libraries, are primarily used for storage, so a high percentage of the load is permanent, and the codes allow for no reduction in design load for the fire condition.

The fire testing standards effectively base the failure criteria for loadbearing elements on strength. However, beams are often designed for deflection requirements, which mean that their strength is not fully utilised in the cold state and they would therefore have an additional reserve of strength at the fire limit state.

Columns are frequently designed so that a single length will be two or three storeys high. The lowest storey will be loaded the highest and the upper storey will be lightly loaded.

In buildings with a degree of non-permanent load (in terms of duration and magnitude), the load ratio of the structural members is unlikely to be greater than 0.6. In storage buildings, where the majority of load is permanent, the load ratio would normally be higher, but is unlikely to be greater than 0.65.

In **section 9 - Steelwork encasement systems**, the thicknesses of protection required are specified for design temperatures of 550°C, unless otherwise stated. It is the responsibility of the design engineer, using design codes such as *BS 5950-8* or *ENV 1993-1-2*, to specify the appropriate limiting steel temperatures.

The loss of strength of cold-formed steel at elevated temperatures exceeds that of hot-rolled steel by between 10% and 20%. Expert advice should be sought in determining the strength reduction factor at the limiting temperature.

3.1.3a British test standards

BS

Fire resistance test standards

Building Regulations and supporting documentation require elements of structure and other building elements to provide minimum periods of fire resistance, expressed in minutes, which are generally based on the occupancy and size of the building.

Fire resistance is defined in *BS 476: Part 20: 1987* as 'the ability of an element of building construction to withstand exposure to a standard temperature / time and pressure regime without loss of its fire separating function or loadbearing function or both for a given time'.

BS 476: Part 20: 1987
Describes the general procedures and equipment required to determine the fire resistance of elements of construction.

BS 476: Part 21: 1987
Describes the specific equipment and procedures for determining the fire resistance of loadbearing elements.

BS 476: Part 22: 1987
Describes the procedures for determining the fire resistance of non-loadbearing elements.

BS 476: Part 23: 1987
Describes the specific equipment and procedures for determining the contribution made by components to the fire resistance of structures.

Loadbearing capacity
A loadbearing element must support its test load. For floors, flat roofs and beams, allowable vertical deflection is limited to $^{1}/_{20}$ of the clear span.

Integrity
A separating element must resist collapse, the occurrence of holes, gaps or fissures through which flames and hot gases could pass, and sustained flaming on the unexposed face.

Insulation
A separating element must restrict the temperature rise of the unexposed face to below specified levels.

Reaction to fire test standards

Non-combustibility

Non-combustibility testing

To help provide maximum fire safety in buildings, certain building elements need to be constructed of non-combustible materials. A building material is designated as non-combustible if it satisfies performance criteria when tested in accordance with:

BS 476: Part 4: 1970 (1984) Non-combustibility test for materials.

BS 476: Part 11: 1982 (1988) Method for assessing the heat emission from building materials.

Glasroc F MULTIBOARD and Glasroc F FIRECASE are designated as non-combustible materials.

Materials of limited combustibility

(a) Any non-combustible material (listed in AD B, Table A6).

(b) Any material of density 300kg/m³ or more, which does not flame or cause a 20°C temperature rise when tested to *BS 476: Part 11*.

(c) Any material with a non-combustible core at least 8mm thick having combustible facings (on one or both sides) not more than 0.5mm thick. Where a flame spread rating is specified, these materials must also meet the appropriate test requirements.

Gyproc plasterboards are all designated materials of limited combustibility.

Surface spread of flame

Flame spread over wall and ceiling surfaces is controlled by providing materials that are either non-combustible or materials of limited combustibility. Combustible materials (or certain materials of limited combustibility that are composite products) when tested to the standards below, are classified Class 1, 2, 3 or 4. Class 1 provides the greatest resistance to surface spread of flame.

BS 476: Part 7: 1997 Surface spread of flame tests for materials

or

BS 476: Part 7: 1987 Method for the classification of the surface spread of flame of products.

Although the 1987 version has been superseded by the 1997 version, the 1987 version is still cited in Building Regulations.

The exposed plasterboard surfaces of Gyproc and British Gypsum specialist boards, are all designated Class 1.

Surface spread of flame test

Fire propagation

Investigations concerned with the growth of fires in buildings show that the surface spread of flame test does not measure all the properties that are relevant for placing combustible materials in the proper order of hazard. Such considerations led to the test which is described in *BS 476: Part 6: 1989 Method of test for fire propagation for products*. This test takes into account the amount and rate of heat evolved by a specimen whilst subjected to a specified heating regime in a small furnace. The standard describes the method of calculating the results to obtain indices of performance, which help to determine the suitability of combustible wall and ceiling lining materials when used in areas requiring maximum safety.

Class 0

In addition to the degree to which combustible materials used as wall and ceiling linings can contribute to the spread of flame over their surfaces, consideration must also be given to the amount and rate of heat evolved by these materials when used in areas requiring maximum safety. Building Regulations, by means of associated documentation, make provisions that wall and ceiling surfaces must be Class 0 in circulation spaces (which are often escape routes) and in other specific situations. In AD B, a Class 0 material is defined as either:

(a) composed throughout of materials of limited combustibility (this term includes non-combustible materials)

or

(b) a Class 1 material that has a fire propagation index (I) of not more than 12 and a sub-index (i_1) of not more than 6.

The exposed plasterboard surfaces of Gyproc and British Gypsum specialist boards are designated Class 0 in accordance with AD B.

Although Class 0 is the highest performance classification for lining materials, it is not a classification identified in any British Standard.

3.1.3b European test standards

EN

The Construction Products Directive (CPD) within European legislation is designed to enable free trade across Europe in construction products. To enable free trade, harmonised test standards for technical performance are required. The area of technical performance most affected by this requirement is fire performance. This can be split into two main parameters; reaction to fire and fire resistance.

Reaction to fire and fire resistance are measured differently across Europe. For reaction to fire, new test methods were devised and a new Euroclass classification system introduced. For fire resistance the methods used across Europe were similar but the severity of furnaces varied due to factors such as different fuel sources and furnace geometry. To increase consistency between furnaces, the plate thermometer was introduced. This was designed to measure the heat flux to which samples are exposed and consequently equalises the test furnaces.

EN fire resistance

For the UK, the introduction of the plate thermometer means that our furnaces have become more severe, especially during the first 30 minutes of exposure. Refer to **Figure 1 - Comparison of the BS and EN furnace curves** (page 22), that shows the increased temperature measured with a BS thermocouple when a furnace is controlled utilising the EN plate thermometer.

In addition to the severity of the new EN fire resistance tests, the test standard also imposes strict rules governing the use of tests to cover specific end use scenarios (field of application). This restricted field of application has most effect on partition heights where partitions built at heights above 4m may need to have enhanced levels of fire resistance.

Building Regulations allow EN and BS testing systems to run in parallel so that designers can use either EN or BS test data.

British Gypsum has retested the majority of its systems to present test information in accordance with new EN fire test standards. Since the EN and BS standards are running in parallel, this book shows tables to both EN and BS.

EN fire resistance and its application to British Gypsum systems
The EN fire resistance periods claimed for systems in this document are evaluated in accordance with the relevant EN test standards.

BS EN 1364-1: 1999
Specifies a method for determining the fire resistance of non-loadbearing walls.

Fire resistance test – integrity testing on 3m high partition

BS EN 1365-1: 1999
Specifies a method of testing the fire resistance of loadbearing walls.

BS EN 1365-2: 2000
Specifies a method for determining the fire resistance of loadbearing floors and roofs.

BS EN 1364-2: 1999
Specifies a method for determining the fire resistance of non-loadbearing ceilings.

ENV 13381-4
Test methods for determining the contribution to the fire resistance of structural members: Applied protection to steel members.

Partition height
The most significant difference between the EN and BS tables is maximum partition height. Within the *BS 476: Part 22* testing regime, the partition height in the fire state was not considered, and if a partition passed the fire test at 3m it was deemed to be suitable in fire resistance terms for any possible heights. Under the BS system, the cold state height would be the maximum height claimed regardless of the fire duration required. The more sophisticated EN test standard considers partition height and fire resistance performance in the end use condition, ensuring a greater level of fire safety.

Within the field of application section of *BS EN 1364-1: 1999* there is a limitation on the height that can be claimed for a partition based on a given test. To claim up to 3m the partition has to be tested at a height of 3m in the fire resistance test. To claim up to 4m, the partition has to pass the test with a partition test height of 3m and deflect laterally by not more than 100mm during the test. To claim above 4m the partition has to undergo an engineering appraisal where the thermal bow and strength loss of the steel studs is taken into account. This means that the same partition may have different quoted heights at different fire resistance durations. The only alternative to using an engineering appraisal is to conduct a test at the height under consideration. British Gypsum has conducted an extensive series of tests on partitions with heights up to 6m, and data from these tests are used within the performance tables.

Insulation materials, such as glass and stone mineral wool, can affect the fire resistance of a partition. These materials can provide additional insulation / integrity performance but can also increase the thermal bow of the partition and therefore reduce the partition height that can be claimed. Consequently, within the performance tables, there are instances for which the partition height is reduced when a quilt is included within the cavity of the partition. It cannot be assumed that adding a quilt to a partition specification will not impact on its fire resistance.

EN reaction to fire
The European Classification System (Euroclass), devised for the classification of 'reaction to fire', has been introduced as part of the ongoing harmonisation of European standards. Reaction to fire has traditionally been assessed using at least 30 different national standards across Europe. The Euroclass system includes tests designed to better evaluate the reaction of building products to fire.

The Euroclass system predicts the performance of building materials in a real fire more accurately than the old British Standard classification system. Gypsum products are intrinsically fire safe products and generally fall into the higher Euroclass classifications.

Failure of 6m high partition

The Euroclass test methodology is built around the Single Burning Item (SBI) test method (*BS EN 13823: 2002*), which is an intermediate scale test to evaluate the rate of fire growth from a waste paper basket fire positioned in the corner of a room. Other tests used in the classification system are the non-combustibility test (*BS EN ISO 1182: 2002*), heat of combustion test (*BS EN ISO 1716: 2002*) and direct flame impingement test (*BS EN ISO 11925-2: 2002*).

BS EN 13501-1: 2002
Fire classification of construction products and building elements, should be followed to determine the Euroclass rating.

Plasterboard is subject to a 'classification without further test' decision. This means that any type of plasterboard can be classified as A2 so long as the paper grammage of the liner does not exceed 220g/m^2. Any plasterboard product with a paper liner in excess of this grammage is required to be tested. Classification A2 is the second best Euroclass category, see **Table 2** (page 21). All British Gypsum plasterboard products manufactured in accordance with *BS EN 520* are designated Euroclass A2.

Non-combustibility furnace

Building Regulation equivalence
AD B allows the Euroclass classification system to be used for demonstrating compliance. **Table 2** (page 21) gives the requirements and the equivalent Euroclass category.

3.1.4 Why gypsum is so effective in fire

Glass fibres within the core of a Glasroc F specialist board

Fire resistance
Gypsum plasters, plasterboards and British Gypsum specialist boards provide good fire protection due to the unique behaviour of gypsum in fire. When gypsum-protected building elements are exposed to fire, dehydration by heat (calcination) occurs at the exposed surface and proceeds gradually through the gypsum layer. Calcined gypsum on the exposed faces adheres tenaciously to uncalcined material, retarding further calcination which slows as the thickness of calcined material increases. While this continues, materials adjacent to the unexposed side will not exceed 100°C, below the temperature at which most materials will ignite, and far below the critical temperatures for structural components. Once the gypsum layer is fully calcined, the residue acts as an insulating layer while it remains intact.

Table 2 - AD B categories and relevant EN test requirements

National classification	Euroclass category	Safety level	*BS EN ISO 13501-1: 2007* test requirements
Non-combustible	A1		*BS EN ISO 1182: 2002* and *BS EN ISO 1716: 2002*
Material of limited combustibility	A2		*BS EN ISO 1182: 2002* or *BS EN ISO 1716: 2002* and *BS EN ISO 13823: 2002*
Class 0	B		*BS EN ISO 13823: 2002* and *BS EN ISO 11925-2: 2002*
Class 1	C	decreasing fire safety	*BS EN ISO 13823: 2002* and *BS EN ISO 11925-2: 2002*
Class 3	D		*BS EN ISO 13823: 2002* and *BS EN ISO 11925-2: 2002*
N/A	E		*BS EN ISO 11925-2: 2002*
N/A	F		No performance determined

NB Materials classified under a higher category also meet the requirements of lower categories, e.g. material of limited combustibility, Euroclass A2, meets the requirements of Euroclass B and Class 0.

Figure 2 - Temperature profile on the unexposed face of a partition system (page 22), shows a typical unexposed temperature profile for a plasterboard lined partition. The graph shows that there is a significant plateau in the temperature rise, while the plasterboard is undergoing calcination. After this period the temperature gradually rises until the boards lose their integrity and fall away.

The inclusion of glass fibres and shrinkage inhibitors within the gypsum core of certain plasterboards improves the cohesive properties and fire integrity performance. This enables a much higher fire protection performance to be achieved compared to standard wallboard.

In terms of reaction to fire, gypsum products are excellent performers as the endothermic hydration reaction requires energy to be taken from the fire, so gypsum is a negative calorific contributor.

Figures

1 Comparison of the BS and EN furnace curves

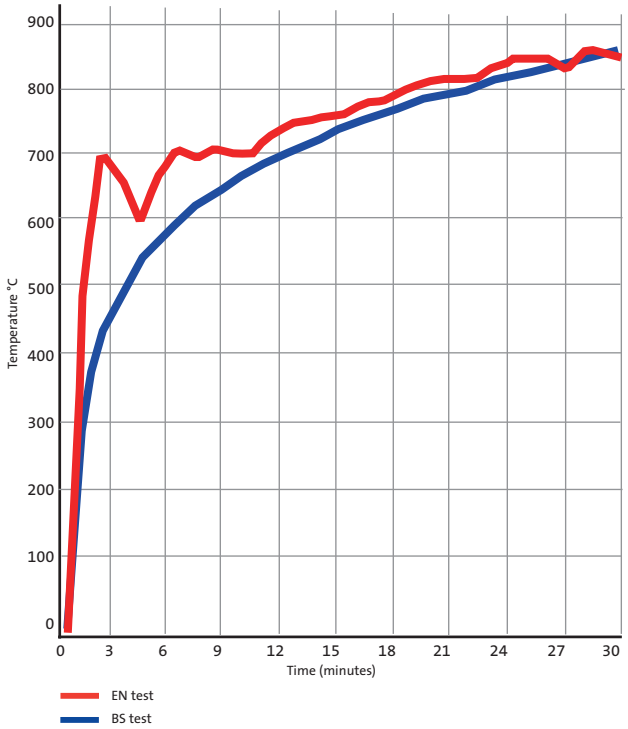

2 Temperature profile on the unexposed face of a partition system

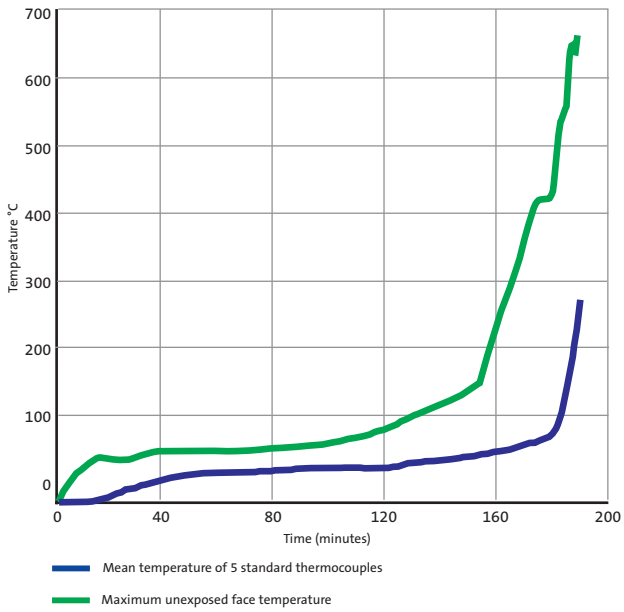

This section includes updated information, added since it was first published in July 2009. Please see the WHITE BOOK update document for details.
Last updated 21/01/2011

3.2 Building acoustics

3.2.1 Legislation and guidance

Building Regulations Approved Document E (AD E) - Residential Buildings
AD E is one of a series of documents that has been approved by the Secretary of State as practical guidance on meeting the requirements of Schedule 1 and Regulation 7 of the Building Regulations.

The Building Regulations are now a performance based regulation with a level of sound insulation specified, which must be achieved on site. There is no longer a 'deemed to satisfy' provision, as even the constructions included within the guidance section of the document need to be tested on site.

AD E gives guidance on providing a reasonable level of sound insulation between dwellings and offers suggested forms of separating construction. These forms of construction do not, however, guarantee that the required performance level will be achieved in practice. Ultimately the developer needs to demonstrate that the dwelling, when built, meets the performance levels set by means of Pre-Completion Testing.

AD E sets performance levels for the following areas of a residential building:

- Separating walls between rooms used for residential purposes and rooms created by a material change of use of the building must achieve a minimum D_{nTw} + Ctr = 43 dB
- Separating walls between new dwellings must achieve a minimum D_{nTw} + Ctr = 45 dB
- Separating floors between rooms formed by a material change of use must achieve a minimum D_{nTw} + Ctr = 43 dB and a maximum L_{nTw} = 64 dB
- Separating floors between new dwellings and within residential buildings must achieve a minimum D_{nTw} + Ctr = 45 dB and a maximum L_{nTw} = 62 dB
- An internal wall or floor between a bathroom or bedroom and any other room within the dwelling (with the exception of walls with doors) must achieve R_w = 40 dB
- The common internal parts of buildings that contain flats or rooms for residential purposes should have an area equal to or greater than the floor area covered with a Class C absorber or better. An alternative method is given with AD E.
- For stairwells or a stair enclosure in buildings containing flats or rooms for residential purposes, an area equal to the surface area of the stair and landings, plus the ceiling area of the top floor, must be covered with an equal area of Class D absorber or alternatively 50% of the area must be covered with a Class C absorber or better.

Robust Details
To avoid Pre-Completion Testing for new-build houses and flats the Home Builders Federation (HBF) developed a series of Robust Details. These forms of construction have been designed and site tested to ensure that they deliver a standard of sound insulation to meet the minimum requirements of AD E. The Building Regulations have been amended to allow Robust Details to be used as an alternative to Pre-Completion Testing. Robust Details Ltd administer the scheme. Further details are available within the British Gypsum **HomeSpec** publication, available to download from www.british-gypsum.com and from the Robust Details website www.robustdetails.com

The Building Standards - Scotland (Technical Handbook Section 5)
AD E applies to England and Wales only. In Scotland, Technical Handbook Section 5 is the approved document covering the resistance to the transmission of sound.

The fundamental differences between Section 5 and AD E are as follows:

- Section 5 has an R_w 43 requirement for internal partitions or mid-floors, which is also generally applicable for student accomodation.
- Section 5 has no requirement for sound absorption in common areas of the building.
- Section 5 measures site performance by way of a D_{nTw} measure only, whereas AD E also uses a Ctr correction factor, particularly for low frequencies.
- The Robust Details initiative does not apply in Scotland, although some of the constructions may be suitable subject to testing.
- Example construction and junction details are available in conjuction with Section 5.
- There is not a scheme for seperating walls and floors that replaces on-site testing.

Refer to www.sbsa.gov.uk for further information and the latest updates.

BS 8233 - Sound insulation and noise reduction for buildings
Code of practice setting out acoustic ratings appropriate to a variety of different building types.

BB93 - Building Bulletin 93: Acoustic design of schools
Building Bulletin 93 contains acoustic design requirements for sound insulation between spaces, ambient noise levels and optimum reverberation times for various spaces within educational buildings. The use of this document is mandatory within AD E and the requirements are enforced through Building Control. For more information refer to the **WHITE** BOOK Education sector guide, available to download from www.british-gypsum.com

Health and Technical Memorandum HTM 08-01 Acoustics - Healthcare Buildings
HTM 08-01 contains a method of determining the level of sound insulation required between adjacent spaces in a healthcare environment. The document also gives recommended reverberation times for various types of space. For more information refer to the **WHITE** BOOK Health sector guide, available to download from www.british-gypsum.com

3.2.2 Principles of building acoustics

Building acoustics is the science of controlling noise in buildings, including the minimisation of noise transmission from one space

to another and the control of noise levels and characteristics within a space.

Noise can be defined as sound that is undesirable, but this can be subjective and depends on the reactions of the individual. When a noise is troublesome, it can reduce comfort and efficiency. If a person is subjected to noise for long periods, it can result in physical discomfort or mental distress. In the domestic situation, a noisy neighbour can be one of the main problems experienced in attached housing. It has been estimated that up to 4 million people in Britain have their lives disturbed by noisy neighbours, sometimes with tragic consequences. The best defence against noise is to ensure that proper precautions are taken at the design stage and during construction of the building. The correct acoustic climate must be provided in each space and noise transmission levels should be compatible with usage. Retrofitted remedial measures taken after occupation can be expensive and inconvenient.

Ideally, the sound insulation requirements of the building should take into account both internal and external sound transmission.

The term 'building acoustics' embraces sound insulation and sound absorption. These two functions are distinct and should not be confused. See **3.2.6 - Sound absorption** (page 30).

Sound insulation

Sound insulation is the term describing the reduction of sound that passes between two spaces separated by a dividing element. In transmitting between two spaces, the sound energy may pass through the dividing element (direct transmission) and through the surrounding structure (indirect or flanking transmission). In designing for sound insulation, it is important to consider both methods of transmission. The walls or floors, which flank the dividing element, constitute the main paths for flanking transmission, but this can also occur at windows, heating or ventilation ducts, doorways, etc.

The acoustic environment of the room and / or the building and the ability to reduce or eliminate air paths in the vicinity of the sound reducing element, e.g. doorsets, glazing, suspended ceiling cavities, ductwork, etc, will have a significant effect on its performance. For these reasons it is unlikely that figures quoted from laboratory test conditions will be achieved in practice. When the background noise is low, consideration may have to be given to a superior standard of sound insulation performance in conjunction with the adjoining flanking conditions.
In any existing sound insulation problem, it is essential to identify the weakest parts of the composite construction.

The Building Regulation requirements regarding the sound insulation of walls and partitions only relate to the transmission of airborne sounds. These include speech, musical instruments, loudspeakers and other sounds that originate in the air. In most cases, floors must also resist the transmission of impact sounds, such as heavy footsteps and the movement of furniture.

Indirect paths (flanking transmission)

Flanking sound is defined as sound from a source room that is not transmitted via the separating building element. It is transmitted indirectly via paths such as windows, external walls and internal corridors. See **Figure 3 - Common flanking paths** (page 25).

It is imperative that flanking transmission is considered at the design stage and construction detailing is specified so as to eliminate or at least to minimise any downgrading of the acoustic performance. The sound insulation values quoted in system performance tables are laboratory values and the practicalities of construction will mean that acoustic performances measured in the laboratory will be difficult to achieve on site.

One of the main reasons for this difference is the loss of acoustic performance via flanking transmission paths. Good detailing at the design stage will minimise this effect and optimise the overall levels of acoustic privacy achieved.

If designing for residential units, design advice on flanking details must be followed to maximise the possibility of achieving the specified acoustic performance. It is imperative that the design advice is followed, otherwise site sound insulation values may not meet the minimum standards required by Building Regulations and expensive remedial treatment will be required.

For more information on flanking details, please refer to the British Gypsum sector guides, available to download from www.british-gypsum.com or visit the Robust Details website www.robustdetails.com

Small openings such as gaps, cracks or holes will conduct airborne sounds and can significantly reduce the sound insulation of a construction. For optimum sound insulation a construction must be airtight. Most gaps can be sealed at the finishing stage using Gyproc Soundcoat Plus, Thistle plaster or Gyproc jointing compounds. Small gaps or air paths can be sealed with Gyproc Sealant. At the base of the partition, gaps will occur, particularly when boards are lifted tight to the ceiling.

Deflection head details – acoustic performance

Deflection heads, by definition, must be able to move and, therefore, achieving an airtight seal is very difficult without incorporating sophisticated components and techniques. Air leakage at the partition heads will have a detrimental effect on acoustic performance of any partition. The approach shown in **Figure 4 - Deflection head A** (page 25) could, for example, result in a loss of around 4 dB to 5 dB due to air leakage, in addition to that lost due to flanking transmission, etc.

Where acoustic performance is a key consideration, steps can be taken to minimise this loss of performance. **Figure 5 - Deflection head B** (page 25) shows the generally accepted method of achieving this and, provided that care is taken to ensure a tight fit between cloaking angle and lining board surface, the loss in performance can be reduced. A loss in performance of around 1 dB to 2 dB would be typical with this method. Other factors, such as flanking transmission through the structural soffit, can significantly affect the overall level of sound insulation. Therefore, to optimise sound insulation performance, other measures may need to be taken.

A suspended ceiling installed on both sides of the partition may provide a similar cloaking effect to that of steel angles.
CasoLine MF incorporating imperforate plasterboard can deliver a similar reduction in air leakage at the partition head. A tight fit between the ceiling perimeter and the surface of the partition lining board is important, although mechanically fixed perimeters are not essential. Ceilings with recessed light fittings may be less effective and

Figures

3 Common flanking paths

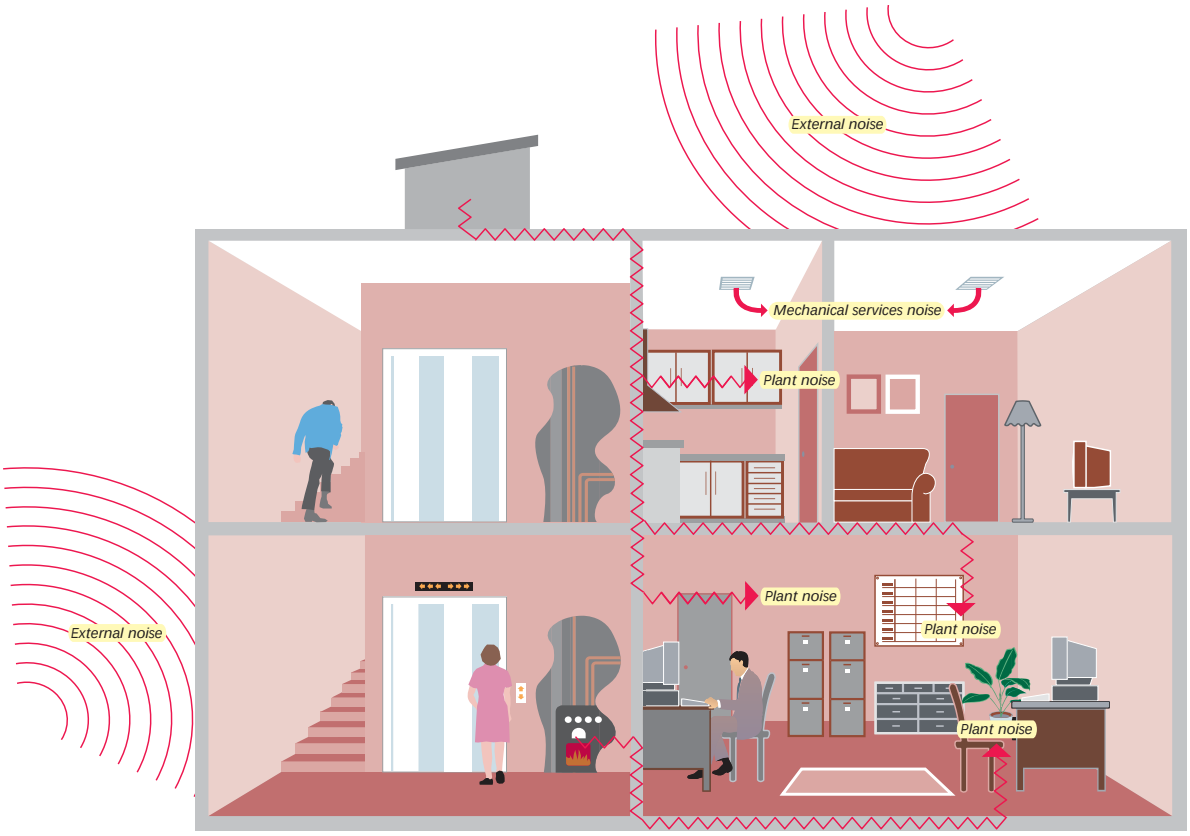

4 Deflection head A (subject to fire performance)

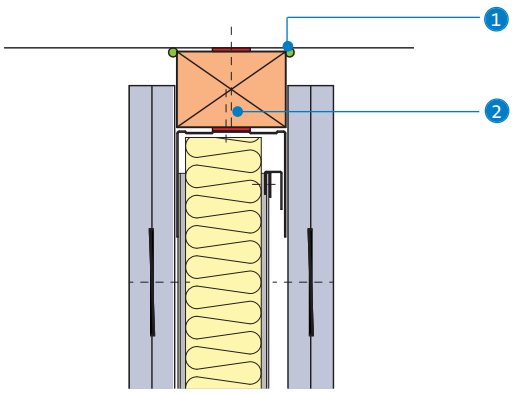

5 Deflection head B (subject to fire performance)

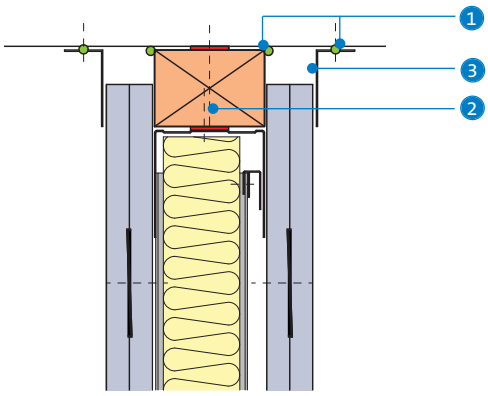

1. Gyproc Sealant for optimum sound insulation
2. 50mm timber head plate equivalent to channel width forming fire-stop
3. Gypframe GA4 Steel Angle to minimise loss of sound insulation performance due to air leakage

if these cannot be sealed in some way, the installation of cloaking angles at the partition head should be considered. A suspended ceiling may also reduce the level of sound flanking transmission via the soffit. Where perforated ceilings are used, e.g. Gyptone, the angles as shown in figure 5 are recommended. However, if the distance between the ceiling and the deflection head is greater than 200mm and the ceiling plenum contains Isover insulation (minimum 25mm), then the angles may not be required.

Sound by-passing a partition via the void above a suspended ceiling
This is a common source of sound transmission particularly where the ceiling is porous to sound. Where sound insulation is important, partitions should, wherever possible, continue through the ceiling to the structural soffit and be sealed at the perimeter junctions. Sound can easily travel through a perforated tile or lightweight suspended ceiling and over the top of a partition where it abuts the underside of the suspended ceiling. Gyproc plasterboard suspended ceilings offer better insulation where partitions must stop at ceiling level to provide a continuous plenum, and in this instance an option is to include a cavity barrier above the ceiling line.

Figure 6 - Performance of typical ceiling / partition junctions (page 27) shows the stages of sound insulation improvement for typical ceiling / high performance partition junctions. The best result is achieved by running the partition through to the structural soffits.

Composite construction
A common mistake made when designing a building is to specify a high performance element and then incorporate a lower performing element within it, e.g. a door within a partition. Where the difference between insulation is relatively small (7 dB or less) there needs to be a comparatively large area of the lower insulation element before the overall sound insulation is significantly affected. A greater difference in sound insulation between the two elements normally results in a greater reduction of overall sound insulation performance.

Figure 7 - Composite calculation chart (page 32) can be used to calculate the net mean sound insulation of composite partitions, e.g. a window in a partition. The correct mean sound insulation value for each part of the partition must be known in order to calculate the difference. This difference, read off on the curved line against the appropriate ratios on the vertical scale, gives the loss of insulation in dB on the horizontal scale. This figure is subtracted from the value of the part with the higher resistance to obtain the net sound insulation of the partition. Figure 7 may also be used to assess the effect of gaps or holes in a partition by giving a sound insulation value of 0 dB to the aperture.

Example
Difference between insulation values of 30 dB with ratio of areas (vertical scale) equal to 1:4. Loss of insulation (horizontal scale) = 23 dB. Therefore, if the two parts had mean sound insulation values of 15 dB and 45 dB respectively, the net sound insulation of the partition would be only 22 dB, i.e. 45 dB - 23 dB = 22 dB.

Table 3 shows the acoustic effect on a range of partitions when various types of door are installed. It can be seen that if a poor performance door is included in a partition, it does not matter if the wall achieves 25 dB or 50 dB sound insulation as the net performance will never be better than 27 dB. The lowest performing element will always dominate the overall performance.

Table 3 - Effect of including various door types within a partition system

Door construction	Mean sound insulation of partition alone (dB)					
	25	30	35	40	45	50
	Mean sound insulation of partition with doorways accounting for 7% of area (dB)					
Any door with large gaps around the edge	23	25	27	27	27	27
Light door with edge sealing	24	28	30	32	32	32
Heavy door with edge sealing	25	29	33	35	37	37
Double doors with a sound lock	25	30	35	40	44	49

Acoustic privacy
Two main factors affect the level of acoustic privacy achieved when designing a building:

- The sound insulation performance of the structure separating the two spaces.
- The ambient background noise present within the listening room.

The ambient background noise level can be a useful tool when designing buildings, as it is possible to mask speech from an adjacent space and hence provide enhanced speech confidentiality. There are a number of commercially available systems for achieving this and the technique is referred to as acoustic perfume. It is, however, more common to treat the problem by specifying appropriate levels of sound insulation. A guide to sound insulation levels is given in Table 4.

Table 4 - Guide to sound insulation levels for speech privacy

Sound insulation between rooms R_w	Speech privacy
25 dB	Normal speech can be overheard
30 dB	Loud speech can be heard clearly
35 dB	Loud speech can be distinguished under normal conditions
40 dB	Loud speech can be heard but not distinguished
45 dB	Loud speech can be heard faintly but not distinguished
> 50 dB	Loud speech can only be heard with great difficulty

Acoustic privacy issues are dealt with in detail for healthcare and educational environments within the **WHITE** BOOK Health sector guide and **WHITE** BOOK Education sector guide, available to download from www.british-gypsum.com

When designing for residential purposes, the standards of sound insulation given in Table 4 are not adequate, and reference should be made to Building Regulations Approved Document E requirements and the guidance given in the British Gypsum **HomeSpec** publication, available to download from www.british-gypsum.com

Ambient noise levels
Along with acoustic privacy, the level of sound energy acceptable within a room should be assessed as regards intrusive noise levels and the level of potential noise likely to be generated within the room itself. For this purpose there are a number of methods, including the Noise Rating (NR) system.

6 Performance of typical ceiling / partition junctions – example stages of sound insulation (excluding other flanking paths)

6a Concealed grid - lined with a single layer of plasterboard and overlaid with insulation = 48 dB

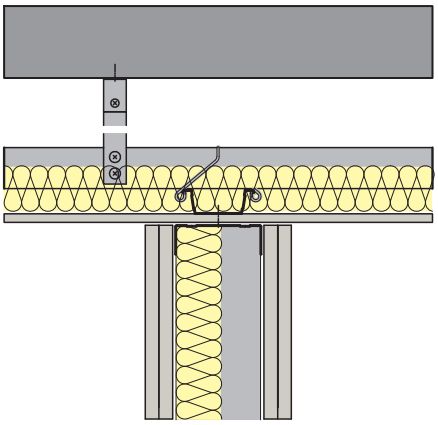

6b Concealed grid - lined with a double layer of plasterboard and overlaid with insulation = 49 dB

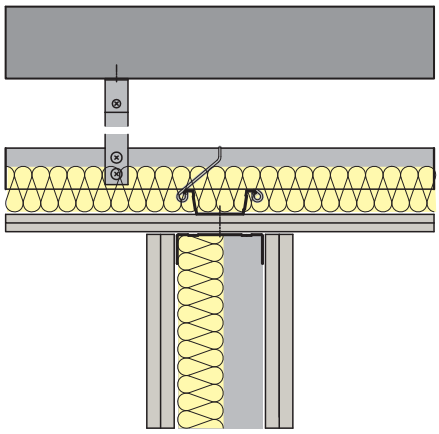

6c Concealed grid lined with a double layer of plasterboard within each room and overlaid with insulation = 56 dB

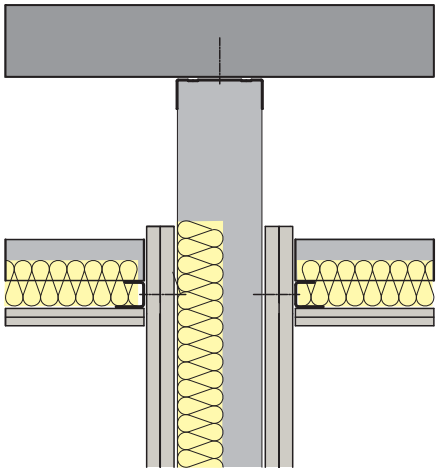

6d Partition lining continued to the soffit enabling the full potential of the partition to be achieved = 58 dB

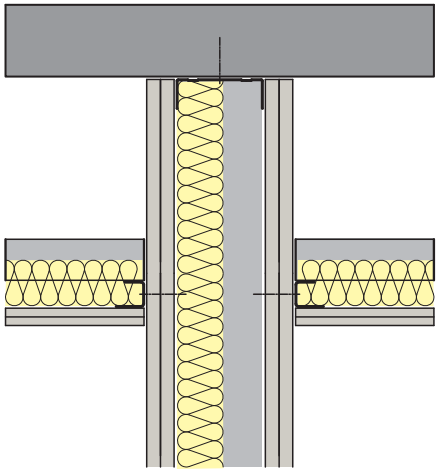

This rating quantifies the level of noise present within a space taking into account break-in of noise from the adjacent areas and also the background noise present within the space from ventilation or other building services. Table 5 gives the recommended maximum noise within different activity spaces using NR criteria.

Table 5 - Recommended maximum noise rating for various types of room function

Situation	NR criteria (dB)
Sound studios	15
Concert halls, large theatres, opera houses	20
Large auditoria, large conference rooms, TV studios, hospital wards, private bedrooms, music practice rooms	25
Libraries, hotel rooms, courtrooms, churches, cinemas, medium-sized conference rooms	30
Classrooms, small conference rooms, open-plan offices, restaurants, public rooms, operating theatres, nightclubs	35
Sports halls, swimming pools, cafeteria, large shops circulation areas	40
Workshops, commercial kitchens, factory interiors	45

The factors that affect the ambient noise level of a space are:

- The level of external noise.
- The level of sound insulation designed into the surrounding structure.
- The amount and type of sound absorbing surfaces within the room.
- The noise generated by building services.

Where control of ambient noise is critical, advice should be sought from an acoustic consultant.

Sound insulation – rating methods

The sound insulation rating methods that follow are defined in:

BS EN ISO 717: Part 1: 1997 (airborne)
and
BS EN ISO 717: Part 2: 1997 (impact).

R_w

This single figure rating method is the rating used for laboratory airborne sound insulation tests. The figure indicates the amount of sound energy being stopped by a separating building element when tested in isolation in the absence of any flanking paths.

D_{nTw}

The single figure rating method that gives the airborne sound insulation performance between two adjacent rooms within a building as measured on site. The result achieved is affected not only by the separating element but also by the surrounding structure and junction details.

Ctr

The Ctr adaptation term is a correction that can be added to either the R_w (laboratory) or D_{nTw} (site) airborne rating. The term has been adopted within AD E for England and Wales. The Ctr term is used because it targets the low frequency performance of a building element and in particular the performance achieved in the 100 - 315 Hz frequency range. This term was originally developed to describe how a building element would perform if subject to excessive low frequency sound sources, such as traffic and railway noise. Performance tables in this book present relevant sound insulation values both in R_w terms but also in the Ctr adapted form. This rating is expressed as R_w + Ctr and allows the acoustic designer to critically compare performances. The rating method has not been universally welcomed. Some acousticians believe that the method is too crude as it only considers the low frequency performance, and because site measurements at low frequencies are prone to difficulties, which can lead to a lack of confidence in the results achieved. Consequently, within separating constructions, British Gypsum can offer enhanced specifications that meet the low frequency performance of the Ctr rating whilst also offering good mid and high frequency sound insulation.

L_{nw}

This single figure rating method is the rating used for laboratory impact sound insulation tests on separating floors. The figure indicates the amount of sound energy being transmitted through the floor tested in isolation, in the absence of any flanking paths. With impact sound insulation, the lower the figure the better the performance.

L_{nTw}

The single figure rating method that is used for impact sound insulation tests for floors. The figure indicates the sound insulation performance between two adjacent rooms within a building as measured on site. The result achieved is affected not only by the separating floor but also by the surrounding structure, e.g. flanking walls and associated junction details.

D_{ncw}

The single figure laboratory rating method that is used for evaluating the airborne sound insulation performance of suspended ceilings. Laboratory tests simulate the room-to-room performance of the suspended ceiling when a partition is built up to the underside of the ceiling with sound transmitted via the plenum.

3.2.3 Lightweight construction

Typically the average sound insulation of a material forming a solid partition is governed by its mass. The heavier the material, the greater its resistance to sound transmission. To increase the sound insulation of a solid partition by about 4 dB, the mass must be doubled. This is known as the empirical mass law.

For example, a 100mm solid block wall of average mass 100kg/m^2 will have an approximate R_w value of 40 dB, whereas a 200mm solid wall of the same material would have an R_w value of 44 dB.

Increasing mass is a very inefficient way of achieving sound insulation and one of the advantages of using lightweight cavity partitions and walls is that better than predicted sound reduction values can be achieved.
Figure 8 - Lightweight systems versus the mass law (page 32) shows how lightweight systems consistently exceed mass law predictions. This demonstrates that adding mass is not always the best method when satisfying acoustic design requirements and that lightweight systems, if correctly designed, can provide very effective acoustic solutions. A simple stud partition, for example, can have a R_w rating 6 dB better than predicted by the mass law.

In this case, the maximum sound insulation obtainable will be governed by transmission energy through the stud frame. The use of other frame types or configurations can result in even better insulation. If Gyproc plasterboard or British Gypsum specialist boards are fixed to timber stud frame using a flexible mounting (Gypframe RB1 Resilient Bar) or a more flexible frame is used (Gypframe studs and channels), then frame energy transmission is minimised and results significantly better than the mass law prediction can be achieved.

The use of two completely separate stud frames can produce even better results. In this case, the maximum transmission of energy is through the cavity between the plasterboard linings. The air in the cavity can be considered as a spring connecting the linings, which allows the passage of energy. The spring will have some inherent damping, which can be significantly increased by the introduction of a sound absorbing material, such as mineral wool, positioned in the cavity. The increased damping of the air-spring results in a reduced coupling between the plasterboard linings and a consequent decrease in sound transmission. Air-spring coupling becomes less significant as the cavity width increases. In practice, cavities should be as wide as possible to insulate against low frequency sounds.

Two important effects, resonance and coincidence, occur in partitions and walls. These are governed by such physical properties as density, thickness and bending stiffness, whereby a reduction in sound insulation occurs at certain frequencies.
In lightweight cavity constructions these effects can be decreased by the use of two or more board layers. A simple way of increasing the sound insulation performance of a single layer metal stud partition is, therefore, to add an additional layer of plasterboard to one or both sides. This will increase the sound insulation performance by approximately 6 dB or 10 dB respectively.

Designing for on-site performance

$D_{nT,w}$ + Ctr

The Ctr rating method puts increased emphasis on the low frequency region of the spectrum. For lightweight construction this means a significant change in some of the design principles. For partitions the cavity should be as large as possible and double layers of plasterboard should be used.

For masonry walls lined with lightweight panels, cavities with a depth less than 60mm should be avoided. Under no circumstances should two linings with matched small cavities either side of a central panel be specified. These cavities can interact and cause a significant downgrade in the critical low frequency zone. If a small cavity needs to be used, then one side only should be lined with a double layer of plasterboard. Optimum performance is achieved by lining one side only and having a cavity depth of at least 85mm. See **Figure 9 - Optimum design of panel linings for Ctr** (page 32).

To increase the sound insulation of new or existing masonry walls, **GypLyner** systems can be used in conjunction with Isover insulation and the metal framing should be lined with plasterboard.
The cavity depth for the **GypLyner** lining should be as large as possible, and small matched cavities either side of the wall should be avoided.

For lightweight separating floors it is necessary to have a plasterboard ceiling that is partially de-coupled from the floor structure, e.g. using Gypframe RB1 Resilient Bars. Floating floor treatments can be enhanced by specifying Gyproc Plank within the walking surface and should have a cavity depth of at least 70mm to avoid low frequency resonance effects in the critical low frequency zone. Floating floor and resilient bar ceiling systems should be tested in a UKAS laboratory to ensure good Ctr performance. The Robust Details Handbook outlines a benchmarking procedure for this purpose (www.robustdetails.com).

The following information provides guidance on the key points for consideration when selecting British Gypsum solutions to meet AD E requirements.

Inappropriate detailing of flanking conditions can greatly reduce the level of performance of the system from that achieved in the laboratory. For separating wall and floor constructions to be fully effective, care must be taken to correctly detail the junctions between the separating wall or floor and associated elements such as external walls, other separating elements and penetrations or door openings, etc. If junctions are incorrectly detailed then the acoustic performance will be limited and Building Regulations requirements will not be achieved in practice. For good practice detailing, please refer to the British Gypsum sector guides, available to download from www.british-gypsum.com.
Pre-completion testing exposes poor flanking details and inadequate separating wall and floor specifications. Good flanking detailing and specifications that provide a reasonable margin of safety on site are therefore essential.

A method of predicting the site D_{nTw} + Ctr performance achievable from a system is to refer to a laboratory R_w + Ctr rating. When looking at the difference between R_w + Ctr and D_{nTw} + Ctr a minimum drop of 4 dB is typical depending on the wall specification. However, British Gypsum recommend that a safety margin of + 9 dB should be built in to reduce the risk of failure to comply with Building Regulations as a consequence of Pre-Completion Testing. This assumes all flanking paths are appropriately detailed, ideal site lay-out exists and perfect workmanship is applied.

For purpose-built dwelling houses and flats that require D_{nTw} + Ctr = 45 dB for separating walls, separating floors and stairs, British Gypsum recommend specifications that are capable of achieving R_w + Ctr = 54 dB.

For purpose-built rooms for residential purposes that require D_{nTw} + Ctr = 43 dB for separating walls and D_{nTw} + Ctr = 45 dB for separating floors and stairs, British Gypsum recommends the use of specifications that are capable of achieving R_w + Ctr = 52 dB for separating walls and R_w + Ctr = 54 dB for separating floors and stairs.

For dwelling houses, flats and rooms for residential purposes all formed by material change of use, which require a minimum D_{nTw} + Ctr = 43 dB for separating walls, for separating floors and stairs, British Gypsum recommends the use of specifications that are capable of achieving R_w + Ctr = 52 dB.

However, good detailing of flanking conditions, etc is still essential.

$D_{nT,w}$

Similar to $D_{nT,w}$ + Ctr, a realistic safety margin should be incorporated to reduce the risk of failure.

British Gypsum recommend a safety margin of + 7 dB when comparing site performance ($D_{nT,w}$) to laboratory performance (R_w). For example, to comply with Scottish Technical Handbook Section 5 for a requirement of $D_{nT,w}$ 56 dB, a system capable of achieving R_w 63 dB under laboratory conditions should be specified.

$L_{nT,w}$

A minimum drop of 5 dB is typical when comparing site performance ($L_{nT,w}$) to laboratory performance (L_{nw}). However, when designing separating floors, in particular timber joist, there needs to be a decoupling of the walking surface from the joists e.g. **GypFloor SB**, **GypFloor SILENT**, traditional platform floating floor, in addition to a de-coupling of the ceiling, e.g. **CasoLine MF** ceiling, Gypframe RB1 Resilient Bar, to reduce the risk of impact sound flanking transmission via the joists into and down the flanking walls. Therefore in some cases the safety margin in the laboratory for timber framed separating floors is likely tio be in the region of + 10 dB rather than the typical minimum + 5 dB.

3.2.4 Examples of practical solutions

GypWall STAGGERED

Features staggered studs that are located within a head and base channel by means of retaining clips. This arrangement means there is no connection through the stud to the plasterboard face on the opposite side of the partition. The system design enables a higher level of sound insulation to be achieved with modest cavity sizes. **Figure 10 - Acoustic benefits of staggered studs** (page 32) shows the improvements possible using a staggered stud arrangement compared to a standard **GypWall CLASSIC** 'C' stud partition with the same partition cavity size.

Gypframe AcouStuds

Gypframe AcouStuds are metal stud sections optimised to give enhanced sound insulation performance. **Figure 11 - Acoustic benefits of Gypframe AcouStuds** (page 32) shows the performance improvement possible using acoustic stud technology compared with a standard 'C' stud of the same cavity dimension.

GypWall QUIET SF

This wall type utilises Gypframe RB1 Resilient Bars to partially de-couple the plasterboard linings from the partition stud frame, leading to enhanced levels of sound insulation. **Figure 12 - Acoustic benefits of resilient bars (partition)** (page 33) shows the improvements possible when including Gypframe RB1 Resilient Bar on one or both sides of a standard Gypframe 70mm 'C' Stud partition.

GypWall AUDIO and GypWall QUIET IWL

The most acoustically effective wall designs are twin frame walls. Minimal or no bridging between the plasterboard linings and the increased cavity size allows optimum performance from the wall. **Figure 13 - Acoustic benefits of twin stud framework** (page 33) shows the difference achievable by using a twin framed wall approach as opposed to a standard **GypWall CLASSIC** 'C' stud partition. The plasterboard linings and insulation are the same for both partitions and the key difference is the overall partition thickness - typically 211mm for the standard partition and 300mm for the twin framed option. With this type of design, further improvements in performance can be achieved by increasing the cavity size and / or increasing the board specification.

Gypframe RB1 Resilient Bar (ceilings)

Gypframe RB1 Resilient Bar is an engineered metal component used predominantly with lightweight separating floors to de-couple the ceiling from the floor structure and thereby improve both the airborne and impact sound insulation performance of the separating floor. The value of this component is recognised in Robust Details, where all lightweight floor solutions feature resilient bars to partially de-couple the ceiling from the floor structure. **Figure 14 - Acoustic benefits of resilient bars (ceiling)** (page 33) shows the substantial performance improvements achievable for both airborne and impact sound insulation when Gypframe RB1 Resilient Bar is utilised instead of a directly fixed ceiling.

Floating floor treatment

Floating floor treatments are used with both lightweight and concrete separating floors to de-couple the walking surface from the floor structure and thereby improve both the airborne and impact sound insulation performance of the separating floor. The value of this technique is recognised in Robust Details, and is currently featured in a number of separating floor solutions. **Figure 15 - Acoustic benefits of a batten floor** (page 33) shows the substantial performance improvement achievable for both airborne and impact sound insulation when a batten floor system is utilised as opposed to a simple Oriented Strand Board (OSB) walking surface on a standard timber joisted floor.

3.2.5 Sound insulating dry linings

In designing for sound insulation, care should be taken to ensure that flanking transmission via the associated structure does not downgrade the performance of the partition or wall to a level below that required in use. This applies especially when a lightweight partition or wall is constructed in a masonry building. Care should therefore be taken to ensure the associated structure is able to achieve the level of sound insulation required.

The performance of sound resisting floors of timber joist or lightweight concrete construction, supported on or flanked by conventionally finished masonry walls, can be adversely affected by flanking transmission in the walls. This effect can be significantly reduced by the application of Gyproc TriLine or a **GypLyner** wall lining system, to the flanking walls.

Lining treatments can also be beneficial in refurbishment work when applied to flanking walls to a new or existing sound resisting wall.

3.2.6 Sound absorption

Sound absorption is the term given to the loss of sound energy on interaction with a surface. Sound absorbent surfaces are used to provide the correct acoustic environment within a room or space. The choice of material will be influenced by its acoustic efficiency, appearance, durability and fire protection. By converting some of the sound energy into heat, sound absorbing materials will also help sound insulation because less noise will be transmitted to other rooms. However, this reduction in noise is very small when compared with the potential reduction due to sound insulation. Sound absorption is therefore never a substitute for adequate sound insulation.

Reverberant energy
Reverberation is the persistence of sound in a particular space after the original sound is removed. A reverberation, or reverb, is created when a sound is produced in an enclosed space causing a large number of echoes to build up and then slowly decay as the sound is absorbed by the walls, ceilings, floor and air. The length of this sound decay is known as reverberation time and can be controlled using sound absorbing materials. The appropriate reverberation time for a space will be dependent on the size and function of the space. Some typical reverberation times are given in Table 6.

Table 6 - Typical reverberation times

Type of room / activity	Reverberation time (mid frequency)
Swimming pool	<2.0 seconds
Dance studio	<1.2 seconds
Large lecture theatre	<1.0 seconds
Small lecture room	<0.8 seconds
Primary school playroom	<0.6 seconds
Classroom for hearing impaired	<0.4 seconds

Speech clarity
Speech clarity (intelligibility) is now recognised as essential in helping pupils in an educational environment to achieve their full potential. For further information please refer to the **WHITE** BOOK **Education sector guide**, available to download from www.british-gypsum.com

Research has shown that pupils who cannot understand clearly what the teacher is saying have a tendency to 'switch off' - limiting their own educational opportunities and creating additional stress for teachers. In a typical classroom with the teacher at one end, sound reaches the pupils both directly from the teacher and via reflections from the ceiling, walls and floor. Refer to **Figure 16 - Sound transmission in a typical classroom** (page 34). Pupils at the front will generally be able to understand what the teacher is saying, whilst pupils at the back and sides of the room receive a mixture of both direct speech and reflected sound, making it difficult to identify the teacher's words.

Reverberation time alone cannot be relied upon to deliver a suitable environment for good speech intelligibility. In any situation where speech communication is critical, e.g. conference room, lecture theatre or classroom, it is necessary to design the space appropriately using a mixture of sound reflective and sound absorbing surfaces.

Sound absorption rating methods

The following ratings are calculated in accordance with *BS EN ISO 11654: 1997.*

Sound Absorption Coefficient, α_s
Individual sound absorption figures quoted in third octave frequency bands are used within advanced modelling techniques to accurately predict the acoustic characteristics of a space. The coefficient ranges from 0 (total reflection) through to 1 (total absorption).

Practical Sound Absorption Coefficient, α_p
A convenient octave-based expression of the sound absorption coefficient, commonly used by acoustic consultants when performing calculations of reverberation times within a building space.

Sound Absorption Rating, α_w
A single figure rating used to describe the performance of a material. The single figure rating can have a modifier added to indicate if the spectral shape is dominated by a particular frequency range:

- L - absorption is predominantly in the low frequency region.
- M - absorption is predominantly in the mid frequency region.
- H - absorption is predominantly in the high frequency region.

The absence of a letter following the rating indicates that the absorber has no distinct area of sound absorption and has an essentially flat spectral shape. See **Figure 17 - Typical test data sheet for a sound absorption test** (page 34).

Sound absorption treatments are referenced within AD E and BB93 to control the noise levels generated within common areas of residential and educational buildings, e.g. entrance halls, lobbies, corridors, stairs and landings. AD E specifies sound absorption in terms of a class of absorber. The values ascribed to the different classes are given in Table 7.

Table 7 - Absorption classes

Sound absorption class	α_w
A	0.90, 0.95, 1.00
B	0.80, 0.85
C	0.60, 0.65, 0.70, 0.75
D	0.30, 0.35, 0.40, 0.45, 0.50, 0.55
E	0.15, 0.20, 0.25
Unclassified	0.00, 0.05, 0.10

BB93 also specifies target reverberation times for different activity areas – details are shown in the **WHITE** BOOK **Education sector guide**, available to download from www.british-gypsum.com

Noise Reduction Coefficient, NRC
Whilst the sound absorption performance of a ceiling system can be expressed as an NRC, this does not always accurately reflect the product performance. An NRC value is the arithmetic mean of the absorption coefficients across a limited frequency range; this means that it will hide extremes in performance. For instance, a ceiling tile may be a very efficient absorber at high frequencies but very poor at low frequencies, and the NRC value will not reflect this. To optimise the room acoustics the more accurate Sound Absorption Rating α_w rating should be used.

7 Composite calculation chart

How to calculate the overall sound insulation of a partition that includes a door or window

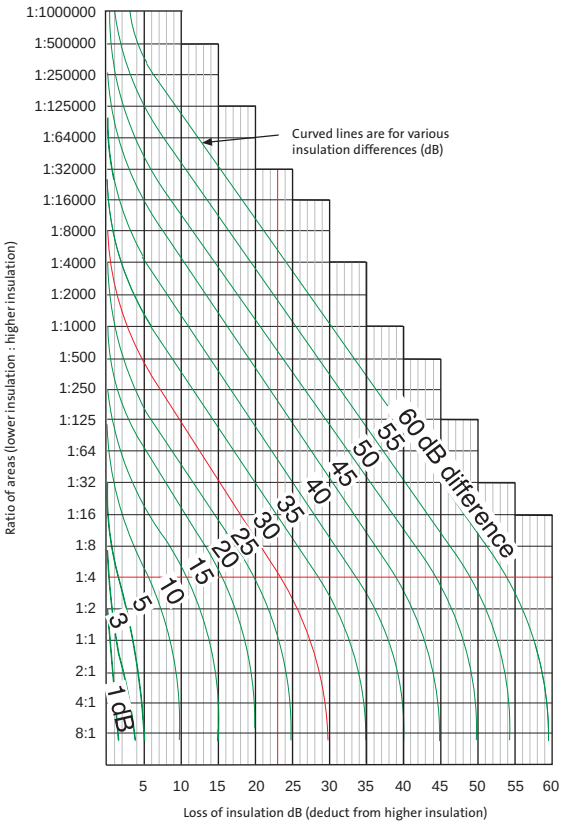

8 Lightweight systems versus the mass law

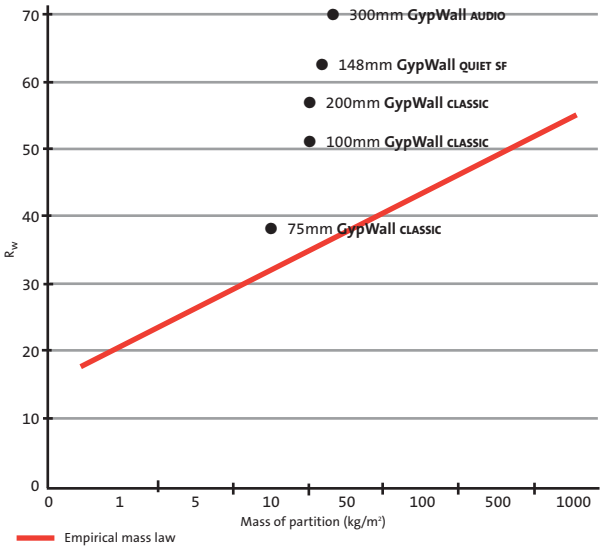

9 Optimum design of panel linings for Ctr

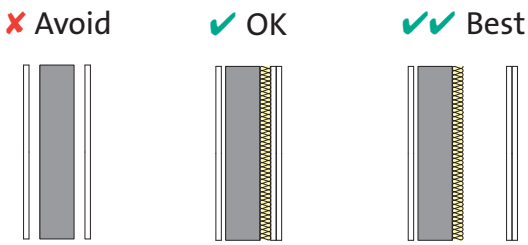

Matched cavities less than 60mm to be avoided.

If space restrictions limit the cavity size then install one side only, ensure glass mineral wool is used in the cavity and use a double layer of plasterboard.

Single cavity as large as possible (preferably greater than 85mm), lined with a double layer of acoustic plasterboard and glass mineral wool included in the cavity.

10 Acoustic benefits of staggered studs

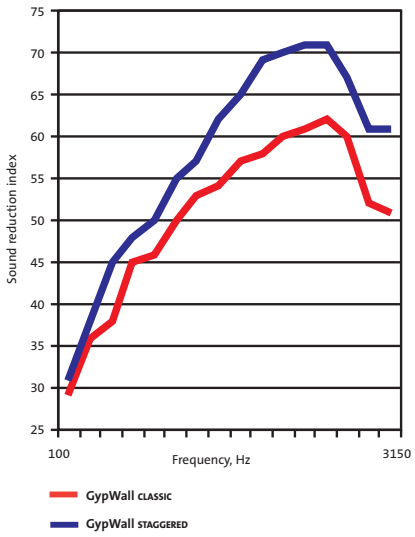

11 Acoustic benefits of Gypframe AcouStuds

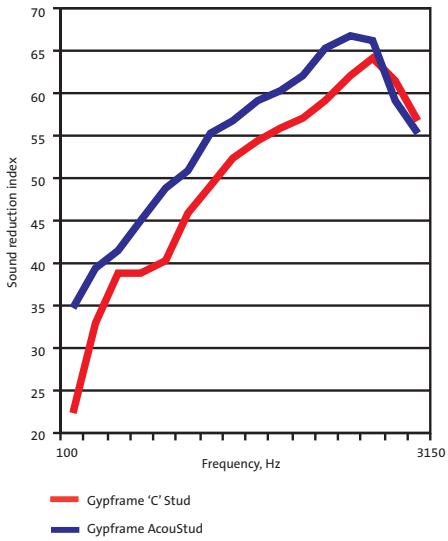

12 Acoustic benefits of resilient bars (partition)

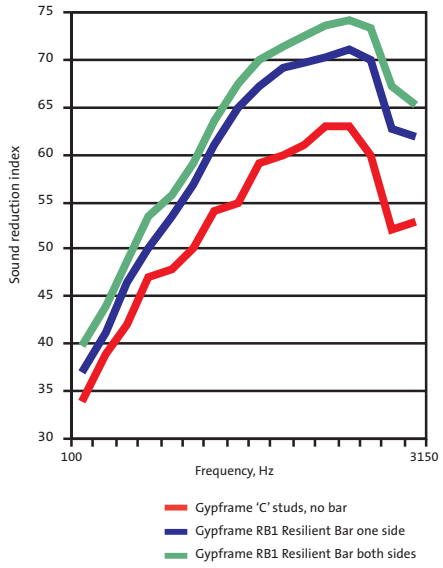

13 Acoustic benefits of twin stud framework

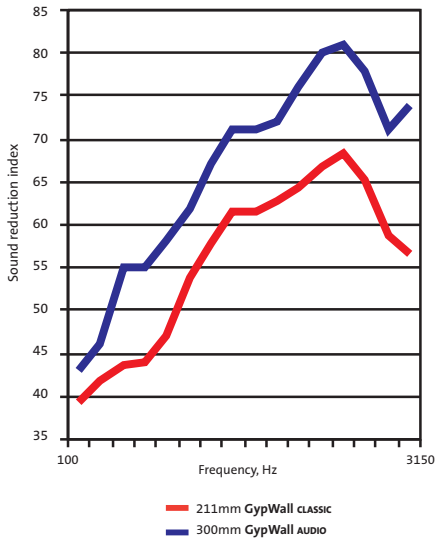

14 Acoustic benefits of resilient bars (ceiling)

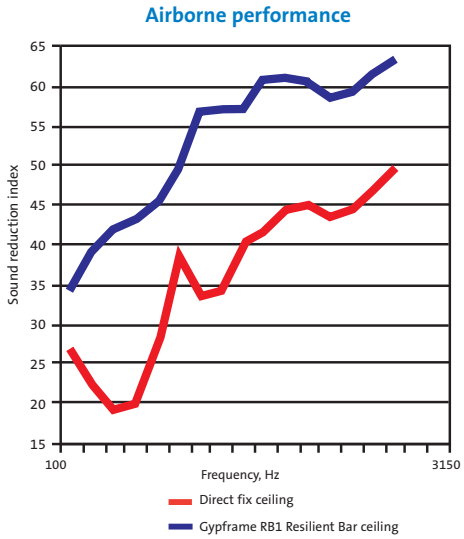

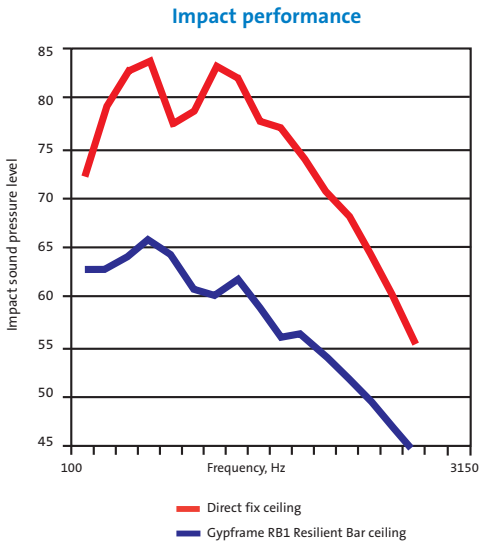

15 Acoustic benefits of a batten floor

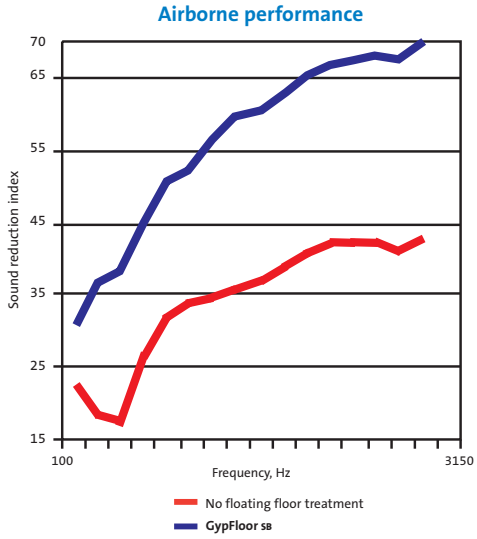

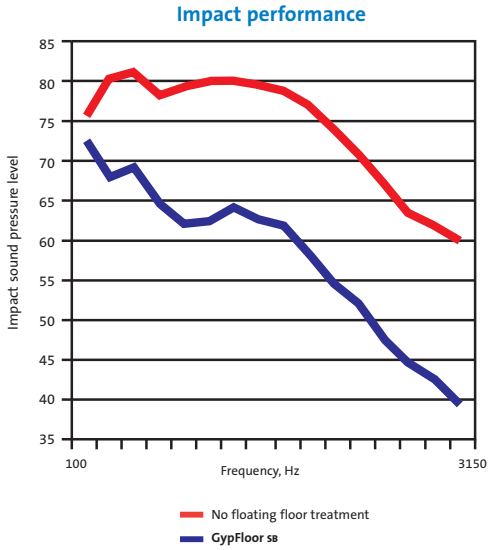

16 Sound transmission in a typical classroom

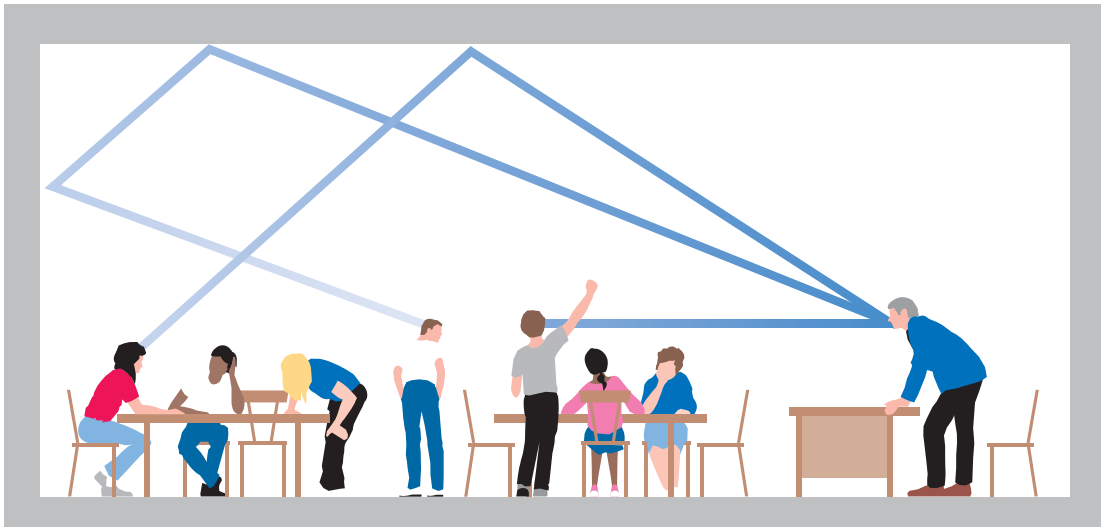

17 Typical test data sheet for a sound absorption test

Test code: R13402AA

Freq. Hz	Ref. curve	Specimen
125		0.25
250	0.40	0.60
500	0.60	1.00
1000	0.60	0.90
2000	0.60	0.55
4000	0.50	0.50

Rating and Sound absorption class according to

EN ISO 11654: 1997 α_w = 0.60 (M) Class = C

It is strongly recommended to use this single figure rating in combination with the complete sound absorption coefficient curve.

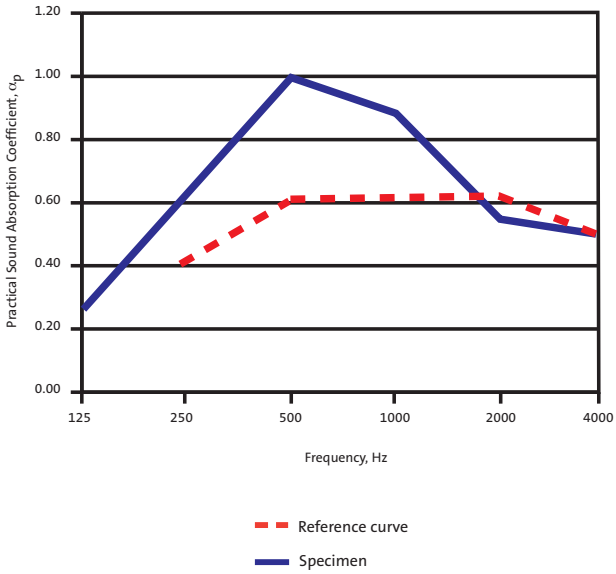

Freq. Hz	α_s
50	0.10
63	0.10
80	0.12
100	0.16
125	0.24
160	0.35
200	0.44
250	0.63
315	0.80
400	0.96
500	1.15
630	1.12
800	1.04
1,000	0.89
1,250	0.76
1,600	0.62
2,000	0.52
2,500	0.46
3,150	0.45
4,000	0.51
5,000	0.50
6,300	
8,000	
10,000	

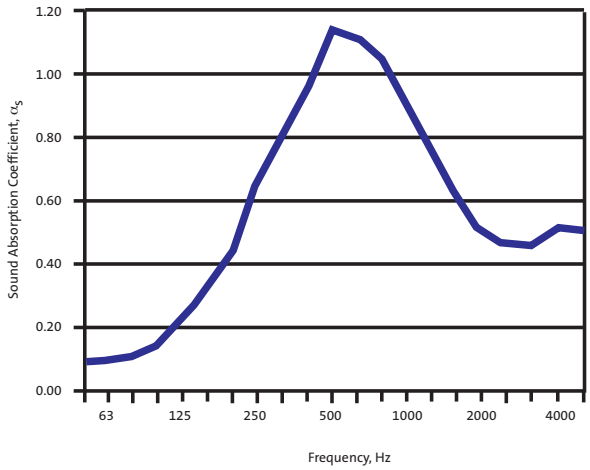

This section includes updated information, added since it was first published in July 2009. Please see the WHITE BOOK update document for details.
Last updated 21/01/2011

3.3 Thermal insulation and condensation

3.3.1 Legislation and guidance

Building Regulations – Conservation of fuel and power
Building Regulations Approved Document L (AD L) comprises four Approved Documents (Scotland is covered by Technical Handbook Section 6):

- AD L1A for New dwellings
- AD L1B for Existing dwellings
- AD L2A for New buildings other than dwellings
- AD L2B for Existing buildings other than dwellings

With specific reference to AD L1A for New dwellings, compliance is based on the carbon performance of the whole dwelling, a measure of which is given through the use of the Standard Assessment Procedure (SAP calculation). Compliance is no longer demonstrated by the elemental U-value method, but U-value calculations are required as they form part of the SAP calculation. Although reference is made to 'Design Limit' U-values within AD L1A, see Table 8, U-values better than the 'Design Limit' are likely to be required to meet the required Carbon index level.

AD L1B for Existing dwellings includes extensions, creating new dwellings through material change of use and material alterations to existing dwellings. Whilst compliance is still based on carbon dioxide emissions, U-values to the levels detailed in Table 9 should be met.

Where an existing element forms part of the thermal envelope it must have a certain thermal value. This is known as the 'threshold' value. If the existing value of the element equals or is better than the threshold, no thermal renovation will be required. If it is worse than the threshold value then thermal renovation to achieve the values in Table 9 will be required.

AD L2A for New buildings other than dwellings is based on the carbon performance of the whole building. A calculation process has to be followed and the Simplified Building Energy Model (SBEM), developed by the Building Research Establishment (BRE), is the methodology for carrying out these calculations. Although reference is made to 'Design Limit' U-values within AD L2A, see Table 8, U-values better than the 'Design Limit' are likely to be required to meet the required Carbon index level.

AD L2B for Existing buildings other than dwellings. Whilst compliance is still based on carbon dioxide emissions, U-values to the levels detailed in Table 9 should be met.

Where an existing element forms part of the thermal envelope it must have a certain thermal value. This is known as the 'threshold' value. If the existing value of the element equals or is better than the threshold, no thermal renovation will be required. If it is worse than the threshold value, then thermal renovation to achieve the values in Table 9 will be required.

CLG – Accredited Construction Details
This guide is intended to assist the construction industry to comply with the performance standards published in AD L. It focuses on issues concerning insulation continuity and airtightness, providing

Table 8 AD L New Buildings - Limiting U-values

	L1A New dwellings W/m²K	L1B New buildings other than dwellings W/m²K
Wall	**0.30**	**0.35**
Floor	**0.25**	**0.25**
Roof	**0.20**	**0.25**

Table 9 AD L1B Existing dwellings & L2B Existing buildings other than dwellings – U-values

	New thermal element W/m²K	Replacement thermal element and upgrading retained thermal elements (threshold values shown in brackets) W/m²K
Wall	**0.28**	**0.30**[1] (0.70)
Floor	**0.22**	**0.25** (0.70)
Pitched roof - insulation at ceiling level	**0.16**	**0.16** (0.35)
Pitched roof - insulation between rafters	**0.18**	**0.18** (0.35)
Flat roof - or roof with integral insulation	**0.18**	**0.18**[2] (0.35)

[1] Cavity walls suitable for the installation of cavity insulation can be 0.55 when upgrading existing (retained) thermal elements.

[2] In L2B a lesser provision (0.20) may be appropriate if there are loadbearing issues.

Scotland is covered by Section 6 of the Scottish Technical Standards and compliance is slightly different compared to England & Wales. Please refer to a British Gypsum **HomeSpec** publication, available to download from www.british-gypsum.com

theoretical information and large scale indicative drawings. It can be accessed via www.planningportal.gov.uk

BRE BR443 – U-value conventions
A guidance document that provides advice on the use of U-value calculation methods. Additional information about the methods is also included, together with data on typical constructions and the thermal conductivity of materials.

BRE BR262 – Thermal insulation avoiding risks
A guidance document highlighting risks, causes and solutions of thermal design. The guide supports the Building Regulations and represents the recommendations of BRE on good design and construction practice associated with thermal standards.

***BS 12524: 2000* – Building material and products – Hygrothermal properties – Tabulated design values**
Gives design data in tabular form for heat and moisture transfer calculations, for thermally homogeneous materials and products commonly used in building construction. It also gives data to enable calculations and conversion of design thermal values for various environmental conditions.

***BS EN ISO 6946: 1997* – Building components and building elements – Thermal resistance and thermal transmittance – Calculation method**
Gives the method of calculation of the thermal resistance and thermal transmittance of building components and building elements, excluding doors, windows and other glazed units; components that involve heat transfer to the ground; and components through which air is designed to permeate. The calculation method is based on the appropriate design thermal conductivities or design thermal resistances of the materials and products involved.

***BS 5250: 2002* – Code of practice for control of condensation in buildings**
A code of practice that describes the causes and effects of surface and interstitial condensation in buildings, and gives recommendations for their control.

3.3.2 The provision of thermal insulation

Reducing heat loss
Any building with an internal temperature higher than the external temperature will lose heat. Thermal insulation reduces this heat loss and therefore helps to conserve energy and therefore reduce heating costs.

Building Regulations specify minimum levels of thermal performance for the external walls, roof and floors of almost all building types. Adequate insulation must also be provided for hot water heating services, pipes, warm air ducts and hot water storage vessels.

Savings are maximised where insulation is supported by other measures such as automatic controls, which govern the operation and output of heating systems and the temperature of stored water.

In addition to providing high levels of thermal performance in newly constructed buildings, insulation products and systems are also incorporated into existing buildings where the energy efficiency of the building may be inadequate. This will apply equally to both non-domestic buildings and to the existing housing stock. The scale of inefficiency for the latter has been highlighted by various Government surveys.

When specifying the insulation system for a particular building it is important to take into account both the heating regime and the pattern of usage of the building.

Infrequently heated buildings
If a building is only infrequently heated, thermal insulation materials should be located as near as possible to the internal surface of exposed building elements to provide a quick thermal response to heating input. This is essential in such conditions to reduce internal surface condensation during the warm-up period, when the maximum amount of water vapour is often produced. It will also ensure that comfortable room temperatures are quickly achieved.

Gyproc ThermaLine laminates are extensively used in both new and existing buildings to provide internal lining and insulation in one fixing operation. They can allow Building Regulation standards to be achieved using clear cavity external wall construction and provide a continuous insulation layer over the whole external wall area, helping to reduce the thermal bridge effects at lintels and reveals.

Regularly heated buildings
Heating regimes may be of a regular nature, with relatively equal periods of heating activity and non-activity, as may occur in housing during winter months. In this situation, traditional forms of high mass construction, such as double leaf cavity walls, can effectively exploit the 'heat store' concept when thermal insulation is positioned within the cavity. Extreme air temperature fluctuations within the building can be subdued as heat stored in components within the insulation 'envelope' is dissipated back into the building. Further benefits can be derived from the reduced size and complexity of space heating equipment necessary to maintain room temperatures.

Airtightness
Airtightness describes the air leakage characteristics of a building. This determines the uncontrolled background ventilation or leakage rate of a building.

Airtightness is expressed in terms of a whole building leakage rate at an artificially induced pressure (usually 50 Pa). The lower the air leakage rate, the greater the airtightness. For example, within AD L1A an upper limit on air permeability of $10m^3/hr.m^2$ is required. In practice, most designs will need to be significantly better than this. Improving a building's airtightness is crucial to improving the energy performance of a building.

Although air leakage can occur directly the majority of leaks occur indirectly. Air leakage paths are often complicated and therefore air leakage can be difficult to trace and seal effectively. However, the following is a list of some example air leakage paths:

- Cracks, gaps and joints in the structure
- Timber floors
- Joist penetrations of external walls
- Windows and doors
- Loft hatches
- Skirting boards
- Chimney and flues
- Service entries, ducts and electrical components
- Areas of unplastered walls

To improve airtightness when using a plasterboard internal drylining system, e.g. **DriLyner BASIC**, continuous ribbons of adhesive should be applied around the perimeter of the wall and around openings / penetrations to seal airpaths. Gyproc Soundcoat Plus can be used on most external masonry walls to seal air paths. This may also improve the airtightness before a drylining system is applied to the wall.

3.3.3 Terminology

Thermal conductivity (λ)
This is a measure of a material's ability to transmit heat, and is expressed as heat flow in watts per metre thickness of material for a temperature gradient of one degree Kelvin (K). It is expressed as W/mK.

Generally, dense materials have high thermal conductivity and are inefficient thermal insulants. Lightweight materials have low conductivity and can be efficient thermal insulants. The lower the λ value of a material, the better its insulating efficiency.

Thermal resistance (R)
This is the measure of the resistance to the passage of heat offered by the thickness of a material and is expressed as m^2K/W. The thermal resistance of a material is obtained by the following calculation:

$$R = \frac{t}{\lambda}$$

Where t = thickness in metres and λ = thermal conductivity (W/mK)

Thermal transmittance (U-value)
This is a property of the whole construction, including air spaces, and is a measure of its ability to transmit heat under steady state conditions. It is calculated by taking the reciprocal of the sum of all the individual thermal resistances, taking into consideration any thermal bridging, and is expressed as W/m^2K. The lower the U-value of the element the better its thermal insulation.

For the purpose of calculating U-values, thermal resistances for the inside and outside surfaces of a building element, and for any cavities within it, have to be taken into account. This is in addition to thermal resistances directly relating to the actual thickness of materials.

The R-values of inside surfaces, outside surfaces and of any cavities will vary according to the surface emissivity. Emissivity should be taken as high for all normal building materials other than polished or metal surfaces, such as aluminium foil, which are regarded as low.

U-values are used as a common basis for comparing different constructions or for meeting a stated figure. When calculating the U-value of some constructions the effect of components that repeatedly bridge the insulation layer, such as mortar joints in lightweight blockwork, studs in timber and metal framed walls, wall ties, and roof joists, should be taken into account. The U-value is calculated through the thermal bridge and combined with the U-value through the insulation in proportion to its face area, often resulting in a higher U-value for the element. More insulation may be needed to compensate for the presence of thermal bridges and return the U-value to a specified level. This can usually be achieved by increasing the insulation thickness or by changing to a more efficient insulant. The additional heat loss for non-repeating thermal bridges, such as details at window and door openings, is determined separately.

3.3.4 Condensation control in buildings

Harmful effects of condensation
Condensation can be one of the worst problems that designers, owners or occupants of buildings experience. Dampness and mould growth caused by surface condensation can not only be distressing to the occupants of a building, but can eventually lead to damage in the building itself.

The thermal insulation and ventilation requirements of Building Regulations aim to reduce the risk of condensation and mould growth occurring in new buildings. However, designers should take care to eliminate all problems caused by condensation, particularly in refurbishment projects on existing buildings, where situations exist that are not directly covered by the regulations.

Reducing the risk
Due to changes in building design, occupancy patterns and increased thermal requirements, all buildings, particularly houses, are more sensitive to condensation now than in previous years. Homes tend to be heated intermittently and moisture-producing activities are concentrated into relatively short periods of time.

Thermal insulation, correctly positioned within specific building elements, combined with adequate heating and, where appropriate, the necessary water vapour control and ventilation, should ensure trouble-free design.

How condensation occurs
At any given temperature, air is capable of containing a specific maximum amount of water in invisible vapour form. The warmer the air, the greater the amount of water vapour it can contain. Conversely, the lower the temperature, the smaller the amount.

Water vapour in air exerts a pressure, called the vapour pressure. Any differential in vapour pressure causes vapour to diffuse from high to low pressure areas.

Warm air inside a building usually contains more moisture than external air, due either to the occupants' activities or resulting from the evaporation of residual moisture in new construction. This creates a pressure differential across structural elements. Water vapour in the internal air, being at a higher pressure, tends to diffuse through the structure towards the colder, lower pressure exterior.

If moisture-laden air comes into contact with a cold surface it will cool. As it cools, the amount of water it can hold in vapour form reduces until, at a specific temperature called the dew point, it becomes saturated. Water is then deposited in the form of condensation.

Surface condensation

Surface condensation occurs when air containing water vapour comes into contact with highly vapour resistant surfaces, which are at, or below, the dew point temperature. See **Figure 18 - Surface condensation** (page 42). It usually shows itself as beads of water, damp patches, and, where the condition persists, mould growth.

Surface condensation can be in localised zones in a particular building element caused by the presence of 'cold bridges', such as mortar joints in walls, which can be colder than the rest of the wall structure.

In addition, warm moist air will diffuse through a building into colder rooms, such as poorly heated bedrooms and stairwells. This is one reason why surface condensation does not always occur in the room where water vapour is produced.

Interstitial condensation

Warm moist air will also diffuse through building elements to reach colder, lower pressure conditions outside. If the building materials have low water vapour resistance it is possible for condensation to occur within the building element. This will occur on the first cold surface, at or below dew point temperature, which is encountered by the moisture vapour on its passage through the structure. As an example, for double skin masonry walls, the position for condensation to form is on the inner face of the outer leaf whether or not insulation is included in the cavity. See **Figure 19 - Interstitial condensation** (page 42).

There is no evidence to suggest that interstitial condensation will occur within the core of building materials under general building and climatic conditions. For other types of building structure vapour control layers can help to eliminate the risk of interstitial condensation. It is recommended that the risk of harmful condensation be assessed using the calculation procedures given in *BS 5250*.

3.3.5 Designing to reduce condensation risk

Thermal insulation

Thermal insulation helps to reduce the risk of surface condensation by maintaining surfaces above the dew point temperature subject to adequate heating being provided.

In buildings that are heated infrequently, the thermal insulation should be located as near as possible to the internal surface of building elements to provide rapid thermal response. These surfaces will then be less prone to surface condensation during the warm-up period, which is often when the maximum amount of water vapour is produced. Being located on the warm side of the structure, Gyproc ThermaLine laminates will help to provide this rapid thermal response and will also reduce the thermal bridge effects in a building, e.g. at lintels and reveals.

With some construction types the potential problem may be one of interstitial condensation. Gyproc ThermaLine laminates are available with integral vapour control to minimise the risk. Alternatively, the choice of construction may demand a different position for insulation, away from the surface lining. Surface condensation will not generally be a problem in these circumstances, particularly where adequate heating is provided. Consideration should be given to establishing whether the particular construction brings with it any increased risk of interstitial condensation.

For most constructions the use of vapour permeable insulation, in combination with other building materials of low vapour resistance, will allow the structure to breathe naturally. In this instance, the likely occurrence of interstitial condensation will be shifted to less problematic areas, such as masonry walls (inner face of the outer leaf).

Heating

Adequate heating helps to keep the temperature of the internal surfaces above the dew point. Ideally, an air temperature above 10°C to 12°C should be maintained in all parts of the building.

Ventilation

Ventilation removes the water vapour produced within a building to the outside air. Adequate ventilation, including the provision of small controllable slot ventilators in windows, electrical extractor fans controlled by humidistats in bathrooms and kitchens, and cooker hoods extracted to the outside air, will help to reduce harmful condensation and mould growth. Ideally, ventilation should control the internal air to between 40% and 70% relative humidity (RH) for human occupation.

Condensation can occur in roof spaces of slated or tiled pitched roofs of dwellings, and in timber joisted flat roofs with insulated ceilings, unless adequate ventilation is provided. Precautions should be taken, in particular the provision of adequate cross-ventilation of the roof spaces to the outside.

The requirements for ventilation in buildings are given in the Building Regulations.

Vapour control layer

A vapour control layer, usually in the form of a membrane, is used to substantially reduce the transfer of water vapour through a building element in which it is incorporated. See **Tables 11** and **12** (pages 40 and 41 respectively) for wall and roof constructions.

A vapour control layer, positioned on the warm side of the thermal insulation within a building element, helps to reduce the risk of interstitial condensation occurring within that element. However, other precautions may also be necessary, either in combination with, or as alternatives to, a vapour control layer. These include the use of ventilated cavities and the provision of materials of low vapour resistance, particularly on the colder side of the construction.

Vapour control layers should be as airtight as possible. Holes and penetrations for services should be cut neatly and suitably sealed, or localised condensation may still occur. It is recommended that the risk of harmful interstitial condensation is assessed using the calculation procedure given in *BS 5250*.

Existing masonry walls

Internal lining

Gyproc products with vapour control layers can reduce interstitial condensation, providing the wall has low vapour resistance. The wall should not incorporate any other material of high vapour resistance.

Blown cavity fill

Where it is impractical to provide a new internal lining to existing cavity walls, mineral wool can be blown into the cavity. In conjunction with adequate heating, the internal surface of the wall will be kept above dew point temperature, and the permeability of the mineral wool material will not impede the natural diffusion of moisture vapour away from critical areas within the structure.

New masonry walls

Full or partial cavity fill

Positioning Isover CWS or Hi-Cav 32 insulation batts within the cavity, either as full-fill or in conjunction with a residual cavity, can maintain the internal surface of the wall above dew point temperature or negate the cold bridging effects of mortar joints. Thus a water vapour resistant treatment to the surface of internal plaster finishes is not always necessary, as any interstitial condensation will occur on the inner surface of the outer leaf. Thistle building plasters, or Gyproc WallBoard fixed in the DriLyner or GypLyner systems, form suitable linings. Where water vapour resistance is required, the plasterboard lining surface can be treated with two coats of Gyproc Drywall Sealer. Alternatively, Gyproc WallBoard DUPLEX can be specified within the DriLyner MF system.

Thermal laminate drylining

A drylining of Gyproc ThermaLine laminates may also be considered, either with a clear cavity or in conjunction with Isover insulation for thermal insulation purposes and to provide a vapour control layer.

Metal frame walls

These walls comprise of light gauge roll-formed galvanised steel components engineered to form the structural frame. High levels of thermal insulation are a feature of this form of construction, and care must be exercised to ensure that there are no risks of interstitial condensation occurring within the structure.

In Metsec Steel Framing Systems, Isover Steel Frame Batt (SF1) or rigid foam insulation is located to the outside of the steel frame. Isover Steel Frame InFill Batts (SF2) are positioned in the stud cavity and Gyproc DUPLEX grade plasterboards can be used as the internal face lining. The dew point will then fall within the outer cavity or external cladding. This principle is often referred to as 'warm frame' or 'hybrid', and applies equally to roof conditions.

Timber frame walls

To reduce the risk of interstitial condensation occurring on the inner surface of the sheathing, a vapour control layer is required as part of the internal lining. This can be provided by using Gyproc DUPLEX grade plasterboards or appropriate Gyproc ThermaLine laminates incorporating the vapour control, refer to NHBC (Technical Standards for domestic applications) at www.nhbc.co.uk

Provision should also be made for water vapour to escape outward, through very low vapour resistance sheathing boards, breather membranes, external claddings and by vented cavities. It is also good practice to ensure that any accumulation of moisture is directed outwards by incorporating flashings, drainage outlets and suitable timber detailing.

Pitched roofs with insulated ceilings

Positioning a vapour control membrane at ceiling level should reduce the amount of water vapour migrating into the roof space. In practice, however, a continuous barrier is unlikely to be achieved because of the difficulty of sealing leaks through loft access hatches, electrical wiring drops, pipe penetrations and cracks. Gaps in the ceiling can be much more important in the mechanism of water vapour migration than diffusion through the ceiling itself.

A vapour control layer will reduce vapour transmission from the rooms below into what is probably the easiest part of the building structure to ventilate. Adequate cross-ventilation of the roof space is necessary and it is recommended that additional high level openings be provided for roof pitches of 35° or less, or spans in excess of 10m.

Flat roofs

Cold construction

In a cold roof construction, the thermal insulation is located directly above the ceiling. Most of the structure is thus on the unheated side of the insulation and is therefore vulnerable to the risk of interstitial condensation.

To reduce this risk, adequate cross-ventilation must be provided above the insulation to disperse water vapour to the outside. An effective vapour control layer should be provided at ceiling level in adverse conditions, and perforations for pipes, electrical wiring drops, etc, should be sealed. See **Figure 20 - Timber flat roof, cold type** (page 42). Ceilings beneath cold flat roofs are not generally prone to surface condensation since they are relatively light and warm up quickly. They benefit from positioning insulation, such as Isover Spacesaver Ready-Cut, directly behind the ceiling, which allows surface temperatures to build up quickly.

Warm construction

In warm roof construction, the thermal insulation is located on top of a high performance vapour control layer over the roof decking. The construction is referred to as a warm roof because in winter, with adequate heating, the temperature of the vapour control layer, and of the materials below it, is maintained close to that of the internal air. It is not necessary to include a vapour control layer at ceiling level or to ventilate the roof cavities. Consideration should be given, however, to the provision of vertical vapour control layers as necessary, e.g. the use of Gyproc DUPLEX grade plasterboards in roof voids between rooms, to reduce the movement of vapour to adjacent rooms, which may be at different temperatures.

Hygrothermal properties

Table 10 provides typical hygrothermal properties that may be useful when carrying out condensation risk calculations.

Table 10 - Hygrothermal properties

Material	Specific heat capacity [1] Cp J/(kgK)	Water vapour resistance factor, dry [1] μ	Equivalent water vapour resistivity [2] MNs/gm	Vapour resistance MNs/g
Gypsum plasterboard (*BS EN 520*)	1000	10	50	-
Gypsum plaster	1000	10	50	-
Mineral wool - Isover insulation and within Gyproc TriLine	1030	1	5	-
Expanded polystyrene - within Gyproc ThermaLine BASIC	1450	60	300	-
Extruded polystyrene - within Gyproc ThermaLine PLUS	1450	150	750	-
Phenolic foam - within Gyproc ThermaLine SUPER and Glasroc F SOFFITLINE	1400	50	250	-
Vapour control layer within Gyproc DUPLEX grade plasterboard	-	-	-	60
Vapour control layer within Gyproc ThermaLine SUPER and Glasroc F SOFFITLINE	-	-	-	100

[1] *BS EN 12524* Building materials and products - Hygrothermal properties - Tabulated design values.
[2] *BS 5250* Code of practice for control of condensation in buildings.

▶ Refer to **section 14 - Products**, for thermal conductivity performances.

Table 11 - External walls

Recommendations for the use of vapour control layers to reduce the risk of interstitial condensation in external walls of dwellings (with insulation to current standards)

Type of wall	Low vapour resistant outer leaf	Vapour control layer required	Comments
Timber frame (brick outer leaf)	Yes	Yes	Low vapour resistant sheathing and breather membrane. Ventilate cavity between outer and inner leaves to outside.
Metal frame (brick outer leaf)	Yes	Yes	Vapour control layer generally required
Brick / cavity / block Plasterboard lined or plastered	Yes	No	Consider vapour control layer in adverse conditions
Brick / insulated cavity / block Plasterboard lined or plastered	Yes	No	Consider vapour control layer in adverse conditions
Brick / cavity / block Aerated concrete blocks up to approximate density 750kg / m³ (λ value up to 0.20). Thermal laminate lining.	Yes	No	Consider vapour control layer in adverse conditions
Brick / cavity / block Concrete blocks over 750kg / m³ (λ value greater than 0.20). Thermal laminate lining.	Yes	Yes	N/A
Solid masonry Thermal laminates, or insulation between timber battens or metal framing.	Yes	Yes	Ventilation of lining cavity to outside desirable if fixing method permits
Concrete Thermal laminates, or insulation between timber battens or metal framing.	No	Yes	Ventilation of lining cavity to outside required between concrete and insulation
Existing solid walls Treated with vapour resistant finish (internally or externally). Thermal laminates, or insulation between timber battens or metal framing.	No	Yes	Ventilation of lining cavity to outside required or existing vapour resistance treatment considerably reduced

Table 12 - Roofs

Recommendations for the use of vapour control layers in conjunction with plasterboard ceilings (fixed with all edges supported on framing), to reduce the risk of interstitial condensation in the roofs of dwellings (with insulation to current standards).

Type of roof	Roof void layer required	Vapour control	Comments
Pitched roofs, tiled or slated, above 15° pitch, ceiling and insulation horizontal.	Ventilated to *BS 5250* or Approved Document F	No[1]	Separate consideration for adverse conditions, e.g. grouped bathrooms / kitchens in flats. Where designers wish to incorporate a vapour control layer at upper floor ceilings, the area or rooms should be ventilated.
Pitched roofs, tiled or slated, above 15° pitch, ceiling and insulation horizontal.	Without provision for adequate ventilation, e.g. existing dwellings.	Yes[1]	N/A
Pitched roofs, tiled or slated, 15° pitch or less, ceiling and insulation horizontal.	Ventilated to *BS 5250* or Approved Document F	No[1]	N/A
Pitched roofs, tiled or slated, 15° pitch or less, ceiling and insulation horizontal, e.g. existing dwellings.	Without provision for adequate ventilation	Yes[1]	N/A
Pitched roofs, tiled or slated, insulation inclined, ceiling horizontal.	Not ventilated	No	Insulation of high vapour resistance. Gable walls should be insulated. Low vapour resistant under tiling membrane.
Pitched roofs, tiled or slated, insulation and ceiling inclined.	Ventilated to *BS 5250* or Approved Document F	Yes[1]	Low vapour resistant under tiling membrane.
Pitched roofs, with high vapour resistance coverings.			Treat as appropriate for cold or warm flat roofs.
Flat roofs, cold type, insulation at ceiling level[2].	Ventilated to *BS 5250* or Approved Document F	Yes[1]	Minimum air space of 50mm between top of insulation and the soffit of the roof deck. Increase ventilation and air space for spans over 5m.
Flat roofs, warm type, top of the vapour control layer.	Not ventilated	No	Vapour control layer required above insulation on deck.
Flat roofs, warm type inverted, insulation on top of the weather proofing.	Not ventilated	No	Vapour control layer provided by weather proofing.

[1] Ceiling made airtight, e.g. service pipes and access hatches sealed.
[2] Not permitted by NHBC in Scotland.

18 Surface condensation

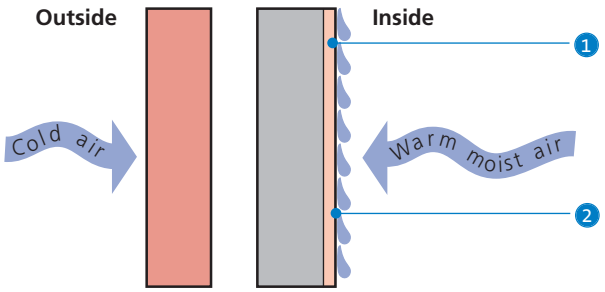

19 Interstitial condensation

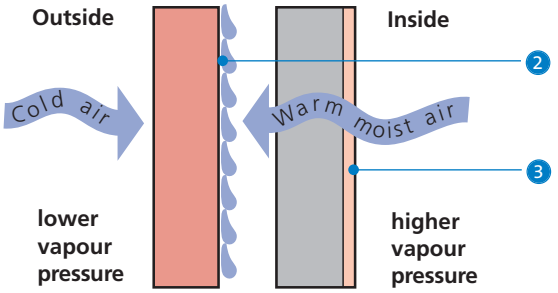

20 Timber flat roof, cold type

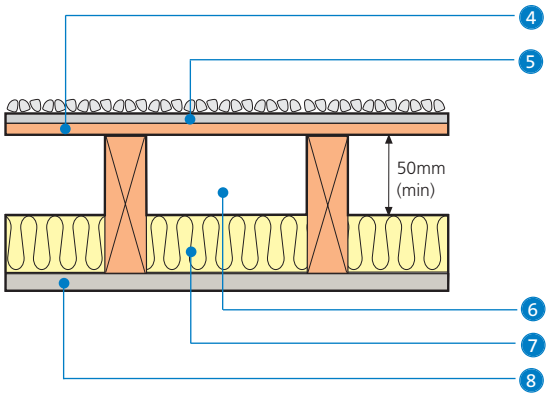

1. High vapour resistance surface
2. Surface at or below the dewpoint
3. Low vapour resistance surface
4. Timber roof decking
5. Built-up felt (or similar) with solar reflective finish
6. Cross-ventilated roof cavities
7. Isover Spacesaver Ready-Cut
8. 12.5mm Gyproc WallBoard DUPLEX

This section includes updated information, added since it was first published in July 2009. Please see the WHITE BOOK update document for details.
Last updated 11/10/2010

3.4 Robustness

3.4.1 Legislation and guidance

***BS 5234: Part 2: 1992* - Partition Grading**

BS 5234 comprises two parts - Part 1 Code of practice for the design and installation, and Part 2 Specification for performance requirements for strength and robustness including methods of test in relation to end-use categories. The standard covers performance aspects such as stiffness, crowd pressure, impact resistance, anchorages and door slamming resistance.

HTM 60 - Ceilings in Healthcare Environments

HTM 60 sets out six performance categories. These categories relate user requirements to the physical and performance characteristics of different ceilings. See the British Gypsum **WHITE** BOOK Health sector guide for more information, available to download from www.british-gypsum.com

***BS EN 13964: 2004* - Suspended Ceiling - Requirements and test methods**

Includes performance requirements for ceiling tiles and suspended ceiling grid systems (concealed and exposed). The standard covers issues such as the load span performance of grids.

3.4.2 Principles of robust design

Partition Duty ratings

All British Gypsum partition systems have a duty rating established in accordance with all the full requirements of *BS 5234*. This rating relates the strength and robustness characteristics of the partition system against specific end-use applications. Table 13 gives details of the four duty categories.

Table 13 - Duty ratings

Partition Duty	Category	Examples
Light	Adjacent space only accessible to persons with high incentive to exercise care. Small chance of accident occuring or misuse.	Domestic accommodation
Medium	Adjacent space moderately used, primarily by persons with some incentive to exercise care. Some chance of accident occuring or misuse.	Office accommodation
Heavy	Adjacent space frequently used by the public and others with little incentive to exercise care. Chance of accident occuring or misuse.	Public circulation areas, industrial areas
Severe	Adjacent space intensively used by the public and others with little incentive to exercise care. Prone to vandalism and abnormally rough use.	Major circulation areas, heavy industrial areas

The series of tests are designed to test the resistance to damage, both aesthetic and structural, from a range of impacts and load applications.

Tests are conducted at the maximum height for the partition system. *BS 5234* itself does not have a method for establishing an acceptable maximum height, and the partition height must be established using a separate method - see maximum partition heights later. It is suggested within *BS 5234* that the crowd pressure test may be suitable for evaluating heights up to 4200mm, but British Gypsum would strongly advise against using this inconsistent approach and would never rely solely on *BS 5234* for evaluating heights, especially above 4200mm.

Tests within *BS 5234* include:

- Partition stiffness
- Resistance to damage from a small hard body impactor
- Resistance to damage from a large soft body impactor
- Resistance to perforation from a small hard body impactor
- Resistance to structural damage from a large soft body impactor
- Resistance to damage from door slamming

BS 5234 does not identify specific points of contact on a partition that should be impacted. However, British Gypsum understands there are limiting points in terms of impact resistance. These are then subjected to the impact tests to ensure that the most onerous situation are assessed.

Optional tests are also detailed within the standard, but these are not used in the partition grading. These include:

- Resistance to damage from a crowd pressure load
- Lightweight anchorages pull down
- Lightweight anchorages pull out
- Heavyweight anchorages wall cupboard
- Heavyweight anchorages wash basin

▶ Refer to **section 3.5 – Service Installations**, for information on fixing to drywall systems.

Important considerations

To achieve Heavy Duty or Severe Duty, the door detail needs to be reinforced otherwise the door opening will undergo too much deflection and damage during the onerous door slamming test.

To claim a partition duty, all tests must achieve the designated performance level. It is not possible, for example, for a partition lined with a single layer of Gyproc WallBoard (12.5mm) to achieve a duty rating better than Medium, because of the board's performance in the hard body perforation test. In the majority of cases, the type of board used will determine the maximum partition duty rating. Table 14 shows the maximum rating available based on a single layer board lining. In all cases, a double layer lining achieves Severe Duty.

Table 14 - Board type required to achieve a given duty rating

Board type	Maximum rating
Gyproc WallBoard 12.5mm	Medium
Gyproc WallBoard 15mm	Medium
Gyproc SoundBloc 12.5mm	Medium
Gyproc SoundBloc 15mm	Medium
Gyproc FireLine 12.5mm	Medium
Gyproc FireLine 15mm	Heavy
Gyproc SoundBloc 15mm	Heavy[1]
Glasroc F MULTIBOARD 10mm	Heavy
Glasroc F MULTIBOARD 12.5mm	Severe
Gyproc DuraLine 15mm	Severe
Rigidur H 12.5mm / 15mm	Severe

[1] Minimum Gypframe 70mm Stud for Heavy Duty.

The level of deflection and strength performance required to achieve Light Duty within *BS 5234* is, in British Gypsum's opinion, unsuitable for any application. British Gypsum does not offer any systems with a rating less than Medium Duty.

Maximum partition heights

As stated previously, *BS 5234: Part 2* does not contain a consistent methodology for establishing the performance of a partition in terms of height. The UK has therefore adopted a methodology, which is based on the level of lateral deflection under a given uniformly distributed load (UDL). The criterion is that the maximum lateral deflection of the partition should not exceed L/240 (where L is the partition height) when the partition is uniformly loaded to 200 Pa.

British Gypsum utilises a UKAS accredited test laboratory to evaluate partition system heights against this performance criteria. The test evidence comes from a full-scale test procedure where the test specimen is subjected to a UDL and the induced lateral deflection recorded. From this procedure, it is possible to establish the maximum height for a range of partition systems. Please see **Table 15** for example using **GypWall CLASSIC**.

When cutting Gypframe studs to suit partition height, it is not good practice to cut the stud through the location of a service cut-out.

Table 15 - GypWall CLASSIC metal stud partition recommended maximum heights (mm) - based on a limiting deflection of L/240 at 200 Pa Applicable to non fire-rated or *BS 476: Part 22* fire-rated constructions only (not applicable to *EN 1364-1: 1999*)

Stud	Boarding each side	600mm centres	600mm boxed	400mm centres	400mm boxed	300mm centres	300mm boxed
48 S 50	1 x 12.5mm	2500	2800	2900	3200	3100	3500
	1 x 15mm	2800	3000	3100	3300	3300	3600
	2 x 12.5mm	3400	3600	3600	3800	3800	4000
	2 x 15mm	3700	3800	3900	4000	4000	4200
48 I 50	1 x 12.5mm	2900	-	3400	-	3700	-
	1 x 15mm	3100	-	3500	-	3800	-
	2 x 12.5mm	3700	-	3900	-	4200	-
	2 x 15mm	3900	-	4200	-	4400	-
60 S 50	1 x 12.5mm	3200	3400	3500	3800	3800	4200
	1 x 15mm	3400	3600	3700	4000	4000	4300
	2 x 12.5mm	4100	4300	4300	4600	4600	4800
	2 x 15mm	4400	4500	4600	4800	4800	5000
60 I 50	1 x 12.5mm	3600	-	4000	-	4400	-
	1 x 15mm	3800	-	4200	-	4500	-
	2 x 12.5mm	4400	-	4700	-	5000	-
	2 x 15mm	4600	-	4900	-	5200	-
60 I 70	1 x 12.5mm	4100	-	4600	-	5000	-
	1 x 15mm	4200	-	4700	-	5100	-
	2 x 12.5mm	4700	-	5100	-	5500	-
	2 x 15mm	4900	-	5300	-	5600	-
70 S 50	1 x 12.5mm	3600	3900	4000	4300	4300	4700
	1 x 15mm	3800	4100	4200	4500	4500	4900
	2 x 12.5mm	4600	4800	4900	5100	5100	5400
	2 x 15mm	4900	5100	5100	5300	5300	5600
70 S 60 or 70 AS 50	1 x 12.5mm	3800	4100	4200	4600	4500	5000
	1 x 15mm	4000	4300	4400	4700	4700	5100
	2 x 12.5mm	4700	4900	5000	5300	5200	5600
	2 x 15mm	5000	5200	5200	5500	5500	5800
70 I 50	1 x 12.5mm	4100	-	4600	-	5000	-
	1 x 15mm	4300	-	4700	-	5100	-
	2 x 12.5mm	4900	-	5300	-	5600	-
	2 x 15mm	5200	-	5500	-	5800	-
70 I 70	1 x 12.5mm	4600	-	5100	-	5600	-
	1 x 15mm	4700	-	5300	-	5700	-
	2 x 12.5mm	5300	-	5700	-	6100	-
	2 x 15mm	5500	-	5900	-	6300	-

Table 15 (continued) - GypWall CLASSIC metal stud partition recommended maximum heights (mm) - based on a limiting deflection of L/240 at 200 Pa. Applicable to non fire-rated or *BS 476: Part 22* fire-rated constructions only (not applicable to *EN 1364-1: 1999*)

Stud	Boarding each side	600mm centres	600mm boxed	400mm centres	400mm boxed	300mm centres	300mm boxed
92 S 50	1 x 12.5mm	4500	4800	4900	5400	5300	5800
	1 x 15mm	4700	5000	5200	5600	5500	6000
	2 x 12.5mm	5700	5900	6000	6300	6200	6600
	2 x 15mm	5900	6100	6200	6500	6400	6800
92 S 60 or 92 AS 50	1 x 12.5mm	4700	5000	5200	5600	5600	6100
	1 x 15mm	4900	5300	5400	5800	5800	6300
	2 x 12.5mm	5800	6000	6100	6500	6500	6900
	2 x 15mm	6000	6200	6300	6700	6600	7000
92 S 10	1 x 12.5mm	5300	5800	6000	6600	6500	7200
	1 x 15mm	5500	6000	6100	6700	6600	7300
	2 x 12.5mm	6200	6600	6700	7200	7200	7700
	2 x 15mm	6400	6800	6900	7400	7300	7800
92 I 90	1 x 12.5mm	6000	-	6800	-	7400	-
	1 x 15mm	6100	-	6900	-	7500	-
	2 x 12.5mm	6800	-	7400	-	7900	-
	2 x 15mm	6900	-	7500	-	8000	-
146 S 50	1 x 12.5mm	6200	6800	6900	7600	7500	8300
	1 x 15mm	6500	7000	7200	7800	7700	8400
	2 x 12.5mm	7600	8000	8100	8600	8500	9100
	2 x 15mm	7900	8200	8300	8800	8700	9300
146 AS 50	1 x 12.5mm	6500	7100	7300	8000	7900	8700
	1 x 15mm	6800	7400	7500	8200	8100	8900
	2 x 12.5mm	7800	8200	8400	8900	8900	9500
	2 x 15mm	8100	8500	8600	9100	9100	9700
146 I 80	1 x 12.5mm	7900	-	8900	-	9700	-
	1 x 15mm	8100	-	9000	-	9800	-
	2 x 12.5mm	8800	-	9600	-	10400	-
	2 x 15mm	9000	-	9800	-	10500	-
146 TI 90	1 x 12.5mm	8400	-	9500	-	10400	-
	1 x 15mm	8500	-	9600	-	10500	-
	2 x 12.5mm	9100	-	10100	-	10900	-
	2 x 15mm	9400	-	10300	-	11100	-

In all systems, for heights below 4200mm, the appropriate Gypframe Standard Floor & Ceiling Channel can be used. It is recommended that for heights between 4200mm and 8000mm, the Gypframe Deep Flange Floor & Ceiling Channel is used. Gypframe Extra Deep Flange Floor & Ceiling Channel is used for heights above 8000mm. Additional consideration needs to be given if there is a deflection head requirement.

Assessing acoustic performance of GypWall CLASSIC with reduced stud centres

Reducing the centres of the metal studs within GypWall partition systems can have a detrimental effect on the sound insulation performance of the system. British Gypsum has estimated the performance reductions for GypWall CLASSIC:

- When there is no insulation within the partition cavity and studs are closed down to 400mm centres, this results in an estimated 2 dB loss in R_w compared to studs at 600mm centres with no insulation.
- When there is no insulation within the partition cavity and studs are closed down to 300mm centres, this results in an estimated 3 dB loss in R_w compared to studs at 600mm centres with no insulation.
- When there is a minimum 25mm Isover insulation within the partition cavity and studs are closed down to 400mm centres, this results in an estimated 0 dB loss in R_w compared to studs at 600mm centres with 25mm Isover insulation.
- When there is a minimum 25mm Isover insulation within the partition cavity and studs are closed down to 300mm centres, this results in an estimated 2 dB loss in R_w compared to studs at 600mm centres with 25mm Isover insulation.

If the partition system is also performing a fire compartmentation function to EN standards, the partition height in the fire state also needs to be established for the required duration. It should not be assumed that the cold state height is still valid in the fire state.

Movement

Deflection of upper floor and roof slabs can cause appreciable stress in partitions. Where such deflection is likely to occur, the partition to structural soffit junction detail must be designed to accommodate movement, whilst still complying with any fire or acoustic performance requirements. Typical deflection head details for fire-rated **GypWall** partition systems are given in the relevant partition and wall system sections within this book. Additional attention to detailing will be required to optimise sound insulation performance. The detail included in **GypWall STAGGERED** shows a good practice solution incorporating steel angles, either side of the head and sealed to the structure, which results in only a 1 dB - 2 dB loss in performance.

Where partitions cross a movement joint in a structural floor or roof slab, they should be provided with a movement joint at the same point, and be capable of the same range of movement as the floor or roof joint. Gyproc Control Joint provides a suitable solution for movement up to 7mm. Gyproc Control Joint may also be required to relieve stresses induced by extreme environmental conditions. For example, consideration could be given to installing control joints at 10m centres in linings that are subjected to either extreme or variable temperatures.

Environmental conditions

Temperature

Gyproc plasterboards, British Gypsum specialist boards and Thistle plasters should not be used where the temperature will exceed 49°C. Prolonged exposure to high temperature, and / or multiple exposure for short periods, results in the gradual continued calcination of the gypsum and loss of its inherent properties. Gyproc plasterboards, British Gypsum specialist boards and Thistle plasters can be subjected to freezing conditions without risk of damage.

Moisture

Gyproc plasterboards should not be used in continuously damp conditions nor in buildings that are not weathertight. However, Gyproc Moisture Resistant board, Gyproc SoundBloc MR, Gyproc DuraLine MR, Gyproc FireLine MR, Gyproc CoreBoard and British Gypsum specialist boards are all suitable for use in intermittently damp conditions or sheltered external situations in conjunction with an appropriate decorative finish. This should take the form of ceramic tiling or other suitable moisture impervious coating by others.

Two coats of Gyproc Drywall Sealer applied to the face of standard grade plasterboards, with the edges adequately protected from moisture may also be suitable to receive a tile finish. The application of Gyproc Drywall Sealer provides surface water absorption resistance only, and does not meet the performance requirements for moisture resistant grade boards as defined in *BS EN 520, type H1*.

Glasroc F specialist boards are also suitable for use in sheltered external situations.

Relative humidity (RH)

In moderate humidity situations, i.e. 40% to 70% RH, no special precautions need to be taken when using Gyproc plasterboards, other than those necessary to prevent interstitial condensation. However, whenever the building's heating system is turned off a rapid increase in the relative humidity can occur as the building cools down. This could lead to the occurrence of potentially harmful surface condensation. Precautions to avoid this problem should be taken, e.g. by continuing to run the ventilation system after the heating is turned off.

Low humidity does not affect the plasterboards, but may lead to distortion of timber framing members as they dry to below their usual moisture content.

Intermittently high relative humidity, i.e. above 70% RH, requires special treatment to the face of the plasterboards, and only moisture resistant grade plasterboards or British Gypsum specialist boards should be used. Suitable surface treatments include ceramic tiling and water vapour resistant paint systems. Gyproc plasterboards are not considered suitable in continuously high humidity conditions. Certain British Gypsum ceiling products are suitable for use in environments above 70% RH.

Special environments - swimming pools and similar environments

Ceiling lining

British Gypsum products and systems are regularly specified for ceilings in and around swimming pool halls and similar areas. With regard to ceiling specifications attention to detail is critical. The following guidance should be considered:

- The boards to be used should be moisture resistant grade or Glasroc F specialist boards. They should be screw-fixed to a framed system at their recommended centres.
- The surface of the board should be finished using British Gypsum's recommended methods, and they must be set and dry before applying decoration. Thistle finish coat plasters are not recommended for this type of environment.
- The decoration should take the form of a suitable moisture impervious finish supplied by others.
- Penetrations in the ceiling linings and perimeters should be avoided where possible. All service penetrations must be sealed using a moisture resistant sealant (even though the recommended plasterboards are moisture resistant it is unwise to allow moisture to gain access to the core of the board).
- The air in the pool area should be conditioned such that condensation will not form on the surface of the boards.
- In situations where there is a risk of condensation occurring within the ceiling cavity, it must be mechanically ventilated or the decorative finish must be impervious to water vapour. This will minimise the risk of condensation forming on 'cold' surfaces in the cavity, which could then come in to contact with the unprotected back face of the plasterboard lining.
- It is good practice to protect the cut ends of Gypframe metal components using suitable material to prevent corrosion.

Wall lining

British Gypsum boards (including MR grade) are not suitable for use as wall linings in areas such as communal showers and public pool halls. Moisture Resistant grade board and Glasroc F specialist boards can be considered for use in adjacent areas of wall lining

and in most domestic situations but attention to detail is critical and, in addition to the guidance given above for ceiling linings, the following additional guidance should be considered:

- The lining boards must be lifted clear from any floor where free water is possible and a suitable skirting detail must be employed which will not allow water penetration.
- Thistle plasters are not recommended for this type of environment with the exception of Thistle Dri-Coat undercoat which could be considered in conjunction with a completely sealed, impervious, tiling system.
- Important guidance is given within *BS 5385-1: 2009* and *BS 5385-4: 2009*, within which gypsum plasterboard and gypsum plaster are deemed unsuitable backgrounds for tiling in 'frequently wetted' areas. 'Frequently wetted' areas include communal showers and pool halls.

X-ray protection

Thistle X-Ray plaster provides X-ray protection and has been tested by the National Radiological Protection Board (NRPB) for use in hospitals and other healthcare environments. Contact the British Gypsum Drywall Academy for guidance on plaster application. The NRPB, now the Radiation Protection Division of the Health Protection Agency, can be contacted via their website: www.hpa.org.uk

Ceilings

EN 13964: 2004 includes class definition relating to exposure conditions and maximum deflection. The standard **CasoLine MF** ceiling lay-out is capable of complying with deflection class 2 and exposure class A, however the system can be modified to meet classes 1 and B. Contact the British Gypsum Drywall Academy for further guidance.

3.5 Service installations

3.5.1 Services with partitions and lining cavities

The installation of electrical services should always be carried out in accordance with the requirements of *BS 7671*, requirements for electrical installations, IEE Wiring Regulations. This was introduced in conjunction with the Institution of Engineering and Technology (IET), and is used for all books related to wiring regulations.

Services can be incorporated in all British Gypsum lining systems, partitions and ceilings.

Gypframe studs or wall lining channels either have cut-outs or push-outs to accommodate routing of electrical services. Grommets or isolating strip should be installed in the cut-out to prevent abrasion of the cables. Switch boxes and socket outlets can be supported on brackets formed from Gypframe 99 FC 50 Fixing Channel or cut and bent channels fixed horizontally between the studs.

Gypframe channels do not generally have cut-outs, these need to be cut on site, paying attention to Health and Safety guidance. Grommets or isolating strip should be installed in these cut-outs to prevent abrasion of the cables.

If a lining system, such as **DriLyner**, does not have sufficient depth to accommodate the service then the background should be 'chased out' to the appropriate depth. Pipes or conduits should be fixed in position before work commences.

To maintain an airtight construction, the perimeter of any penetration through the lining should be sealed as necessary at the time the services are being installed.

The insulating backing of Gyproc ThermaLine laminates should not be chased to accommodate services. PVC covered cables must not come into contact with polystyrene insulation. Suitable isolation methods such as conduit or capping should be used. Please see NHBC Standards 8.1 and BRE Thermal Insulation: avoiding risks (BR262).

In the case of gas service pipes behind drylined walls, *BS 6891* states that the pipe should be encased in building material. This could take the form of Thistle plaster, Gyproc Dri-Wall Adhesive totally encasing the pipe, or timber battens fixed either side of the pipe where the framing for the plasterboard is timber.

The following notes refer to specific service installation requirements in **GypWall** systems.

Walls 100mm thick or less
A zone formed by the installation of electrical accessories on one side of the wall or partition extends to the reverse side. This means that the concealed cable may be less than 50mm from the surface of the wall or partition on the reverse side. Therefore, before carrying out work, e.g. drilling into the surface, the other side of the wall or partition must always be checked to determine the location of any concealed cables. It is good practice to maintain a clear zone.

Where the location of electrical outlets cannot be determined from the reverse side, then the cable must either be mechanically protected or run at least 50mm from the surface of the wall or partition on the reverse side. Please see **Figure 21 - Minimum distance of cabling,** and **Figure 22 - Standard zones of cabling** (page 50).

GypWall RAPID dB Plus
450mm centres
Electric cables, conduits and pipes up to 25mm outside diameter can easily be accommodated within the cavity of the **GypWall RAPID dB Plus** system.

900mm centres
Gypframe GWR3 Floor & Ceiling Channel has half-round cut-outs at regular centres. Please see **Figure 23 - Cross-nogging cut-outs** (page 50). These cut-outs are designed to prevent abrasion of electrical cables where they pass through the metal framework, therefore grommets are not required. Other sections, such as Gypframe 43 AS 50 AcouStud, will need grommets or isolating strip to prevent abrasion. The cut-out in the cross nogging component, Gypframe GWR2 Nogging Channel, allows PVC insulated and sheathed cable up to 4mm^2 to be installed without earthed metallic covering.

Heating pipes
Where heating pipes, particularly micro-bore systems, are to be located within the **GypWall** system, it is recommended that only one pipe is passed through each aperture in the metal framework. If this cannot be accommodated for whatever reason, it may be necessary to incorporate proprietary pipe restraining clips, or other means of keeping the pipes apart, to prevent vibration noise.

Service ducts
Where a large number of electrical cables or pipes have to be accommodated when the framing is at 900mm centres, a service duct can be created by reducing the stud centres to 450mm and omitting the intermediate nogging.

GypWall systems **: ShaftWall** and **FireWall**
The cut-outs in the studs can be used for routing electrical and other small services. Where Gypframe AcouStuds are used, services are routed through 'H' shaped push-outs, 50 x 28mm at the centres, as shown in **Figure 26 - Gypframe studs service cut-out details – 'C' and 'I' studs** and **Figure 27 - Gypframe studs service push-out details – AcouStuds** (page 53).

3.5.2 Service penetrations and fixing into drywall systems

Fixing electrical socket boxes into British Gypsum partitions and walls can impair both fire and acoustic performance, but with careful detailing this can be minimised. AD E offers specific guidance for the installation of socket boxes in separating walls, particularly the avoidance of back-to-back services. The plasterboard should always be neatly cut and Gyproc Sealant should be applied where optimum acoustic performance is required.

In fire-rated walls, the fire-stopping design is dependant on the period of fire resistance. Some typical details are shown in **Figure 28 - Socket box installation – up to 60 minutes fire resistance** and **Figure 29 - Socket box installation – up to 120 minutes fire resistance** (page 53).

There are a number of putty pad fire-stopping products available on the market from a range of manufacturers. Whilst British Gypsum has no objection to the use of putty pads within drylining systems, all performance substantiation has to be provided by the fire-stopping manufacturer as is the case for any fire-stopping material.

In wall linings and ceilings, access for services may be required for routine maintenance, inspection, upgrading or repair. This can be achieved by installing Gyproc Profilex Access Panels.
▶ Refer to **section 14 - Products**.

Penetrations of fire-resistant constructions for services need careful consideration to ensure that the integrity of the element is not impaired, and also that the services themselves do not act as the mechanism of fire spread. It is important to use only those services and their installations that have been shown by fire test to be able to maintain the integrity of the construction. By designing service zones through which all services pass, the number of individual service penetrations can be minimised. Service zones can be sealed after installation of the services using a tested and substantiated fire-stopping system.

In most situations, the services will be installed by contractors other than the drylining contractor. It is important, therefore, that all relevant contractors should be advised as to where and how their service penetrations should be made and maintained. The necessity to independently support services will depend on their size and weight. Please contact the British Gypsum Drywall Academy for guidance.

There is a wide variety of fixing devices suitable for securing fixtures and fittings to British Gypsum systems. Generally, the choice of individual fixing devices will depend on the type of system and the loading requirements. This section gives recommendations on the selection of generic devices and proprietary fixings. **Table 16** (pages 51 and 52) gives example fixing devices and typical applications in drywall systems to meet the specific load criteria. The guidance given is primarily concerned with fixtures at the time of installation. Subsequent installation is less easy, especially for heavier fixtures that will often require identification of the basic frame in hollow partitions or metal furring linings, or considerable care in the **DriLyner** systems, if the lining is not to be locally deflected.

Services can be fixed to the face of the partition, using a Gypframe Service Support Plate, which carries 18mm plywood within the cavity of the partition as shown in **Figure 24 - General arrangement of service support plates showing studs at 600mm centres** (page 53). An alternative to this would be to install a metal or timber support framework within the cavity of the partition as shown in **Figure 28 - Socket box installation – up to 60 minutes fire resistance** and **Figure 29 - Socket box installation – up to 120 minutes fire resistance**, or **Figure 25 - Gypframe 150 FC 90 Fixing Channel** (page 53).

Dampers

Fire and smoke resisting dampers can be installed in British Gypsum's systems. Dampers prevent fire and smoke from passing from one fire compartment to another through heating, ventilation and air conditioning systems. 'An Industry Guide to the Design for the Installation of Fire and Smoke Resisting Dampers' is available from the Association of Specialist Fire Protection (ASFP) or as a download from www.asfp.org.uk. This document refers the designer to the principles of construction, and in particular to tested constructions, or to constructions assessed for performance in fire by a suitably qualified person.

Figures, 30 - Opening bridging studs for duct / damper penetration, 31 - Opening for service penetrations in fire-rated partitions and **32 - Fire tested construction in which the damper is supported by the partition** (page 54) show a method of preparing openings for installing dampers up to a maximum weight of 57kg within British Gypsum systems. As the performance of the complete assembly will depend on a number of elements, the actual details of the opening need to be determined in conjunction with the fire-stopping and damper manufacturers.

Figures

21 Minimum distance of cabling

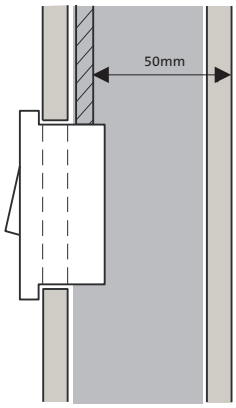

22 Standard zones of cabling

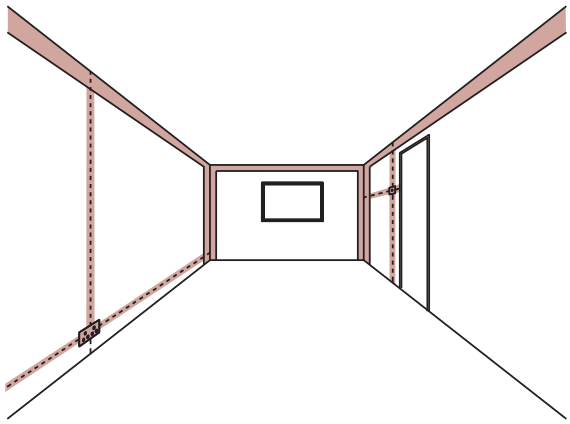

23 Cross-nogging cut-outs

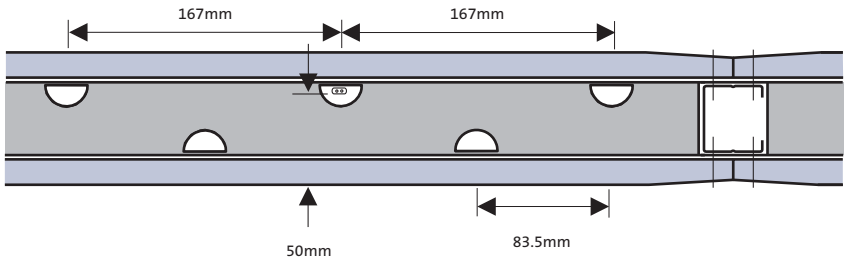

Table 16 - Example fixing devices and typical safe working loads on partitions and wall linings

System	Lightweight fixtures up to 3kg (e.g. socket)	Lightweight to medium fixtures 4 - 8kg (e.g. small mirror)	Medium weight fixtures 9 - 20kg (e.g. shelf)	Medium to heavy fixtures 21 - 50kg (e.g. cupboard)	Heavy fixtures 51 - 100kg (e.g. basin)
ShaftWall **GypWall** systems[1] **GypLyner IWL**	A	B or C	D or I	G, H or I	K or H
Timber stud	A	B or C	K or D	K	K
DriLyner	A	B	F	L	L
GypLyner UNIVERSAL wall lining	A	B or C	D or E	J, K or L	K or L

Reference	Detail	Description	Typical SWL[2] (typical failure load)
A		No. 10 woodscrew into Gyproc plasterboard	3kg (12kg)
B		Steel picture hook and masonry nail into Gyproc plasterboard	4kg (16kg)
C		Metal self-drive into single layer Gyproc plasterboard	6kg (24kg)
		Metal self-drive into double layer Gyproc plasterboard	8kg (32kg)
D		Steel expanding cavity fixing, e.g. M5 x 40, into Gyproc plasterboard (board thicknesses up to 12.5mm)	12kg (48kg)
		Steel expanding cavity fixing, e.g. M5 x 65, into plasterboard (board thicknesses from 15mm to 28mm)	18kg (72kg)
E		Gyproc Drywall Screw fixed through Gyproc plasterboard into 0.5mm Gypframe metal stud / Gypframe 99 FC 50 Fixing Channel	19kg (76kg)
F		Heavy duty plastic plug fixed through Gyproc plasterboard into masonry with 55mm minimum penetration	20kg (140kg)
G		Gyproc Jack-Point Screws fixed through Gyproc plasterboard into minimum 0.9mm Gypframe metal stud / Gypframe 150 FC 90 Fixing Channel	30kg (120kg)
H		No.12 self-tapping screws fixed through Gyproc plasterboard into minimum 0.9mm Gypframe metal stud / Gypframe 150 FC 90 Fixing Channel	50kg (200kg)
I		Steel expanding metal cavity fixing, e.g. M4 x 40, through Gyproc plasterboard into 0.9mm Gypframe metal stud / Gypframe 150 FC 90 Fixing Channel (board thicknesses up to 12.5mm)	40kg (160kg)
		Steel expanding metal cavity fixing, e.g. M4 x 65, through Gyproc plasterboard into 0.9mm Gypframe metal stud / Gypframe 150 FC 90 Fixing Channel (board thicknesses from 15mm to 28mm)	50kg (200kg)
		Steel expanding metal cavity fixing, e.g. M5 x 65, fixing through Gyproc plasterboard into plywood supported by Gypframe Service Support Plate	50kg (200kg)
J		8mm steel frame fixing fixed through Gyproc plasterboard into masonry with minimum 55mm penetration	60kg (240kg)
K		No.12 self-tapping screw fixed through Gyproc plasterboard into timber sub-frame	120kg (480kg)
L		M8 steel bolt / anchor fixed through Gyproc plasterboard into masonry with minimum 55mm penetration	130kg (520kg)

[1] For **GypWall QUIET SF**, ensure that the fixings do not bridge the Gypframe RB1 Resilient Bars, otherwise the acoustic performance may be compromised.

[2] Safe Working Load (SWL) - a safety factor of 4 (steel fixings) and 7 (plastic fixings) has been used.

For technical assistance on above fixings please contact the fixings manufacturer. The suitability of the fixing must be confirmed by the building designer / fixing manufacturer.

Reference can also be made to the Construction Fixing Association (CFA) guidance note 'Fixing For Plasterboard', which is currently under review by the CFA and can be accessed at www.fixingscfa.co.uk

When specifying a fixing to / through Gyproc ThermaLine laminates, please give consideration to the thickness and compressibility of the insulation to ensure that the fixing used is fit for purpose.

The information within **Table 16** does not take into consideration any additional forces that may be applied whether it be accidental, abuse or otherwise.

The example fixing devices, typical safe working loads and typical failure loads given in **Table 16** relate to the installation of single fixtures. It is important to ensure that the drylining system specified is capable of supporting the loads, particularly if installing multiple fixtures.

Table 16 (continued) - Example fixing devices and typical safe working loads on partitions and wall linings

Additional example fixing devices and typical safe working loads when fixing into Rigidur H (**GypWall EXTREME**) and including 12.5mm Gyproc WallBoard, 15mm Gyproc SoundBloc and 15mm Gyproc DuraLine for comparison where appropriate.

Reference	Detail	Description	Typical SWL[1] (typical failure load)
B		Steel picture hook and masonry nail into 12.5mm Rigidur H	17kg (68kg)
		Steel picture hook and masonry nail into 15mm Rigidur H	18kg (72kg)
M		Fischer PD nylon plug and screw into 12.5mm Gyproc WallBoard	7kg (49kg)
		Fischer PD nylon plug and screw into 15mm Rigidur H	10kg (70kg)
		Fischer PD nylon plug into 15mm Gyproc DuraLine	11kg (77kg)
		Fischer PD nylon plug and screw into 12.5mm or 15mm Rigidur H	20kg (140kg)
N		Fischer UX (8 x 50) nylon plug and screw into 12.5mm Rigidur H	21kg (147kg)
		Fischer UX (8 x 50) nylon plug and screw into 15mm Rigidur H	27kg (189kg)
A		No.10 woodscrew into 12.5mm or 15mm Rigidur H	30kg (120kg)
O		Fischer HM8 x 55 steel cavity fixing into 15mm Gyproc SoundBloc	17kg (68kg)
		Fischer HM8 x 55 steel cavity fixing into 15mm Gyproc DuraLine	20kg (80kg)
		Fischer HM8 x 55 steel cavity fixing into 15mm Rigidur H	49kg (196kg)
P		Fischer KD6 steel cavity fixing into 12.5mm Rigidur H	58kg (232kg)
		Fischer KD6 steel cavity fixing into 15mm Rigidur H	74kg (296kg)

[1] Safe Working Load (SWL) - a safety factor of 4 (steel fixings) and 7 (plastic fixings) has been used.

For technical assistance on above fixings please contact the fixings manufacturer. The suitability of the fixing must be confirmed by the building designer / fixing manufacturer.

Reference can also be made to the Construction Fixing Association (CFA) guidance note 'Fixing For Plasterboard', which is currently under review by the CFA and can be accessed at www.fixingscfa.co.uk

When specifying a fixing to / through Gyproc ThermaLine laminates, please give consideration to the thickness and compressibility of the insulation to ensure that the fixing used is fit for purpose.

The information within **Table 16** does not take into consideration any additional forces that may be applied whether it be accidental, abuse or otherwise.

The example fixing devices, typical safe working loads and typical failure loads given in **Table 16** relate to the installation of single fixtures. It is important to ensure that the drylining system specified is capable of supporting the loads, particularly if installing multiple fixtures.

24 General arrangement of service support plates showing studs at 600mm centres

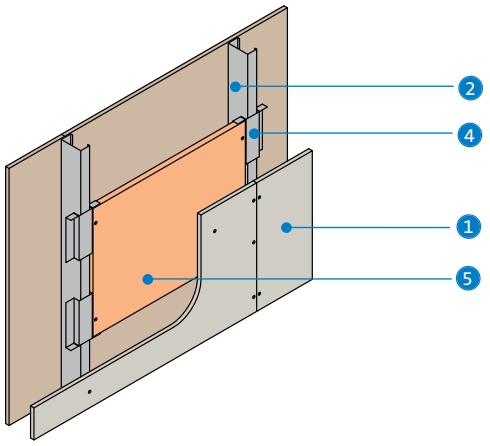

25 Gypframe 150 FC 90 Fixing Channel

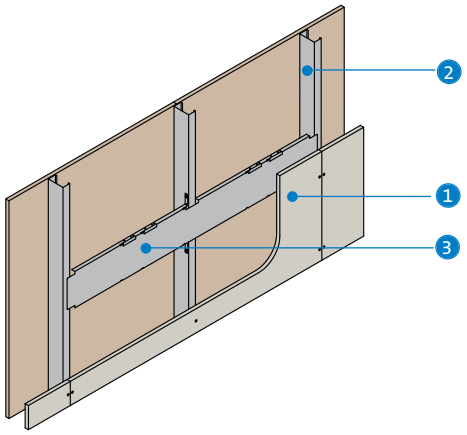

26 Gypframe studs service cut-out details - Gypframe 'C' and Gypframe 'I' Studs

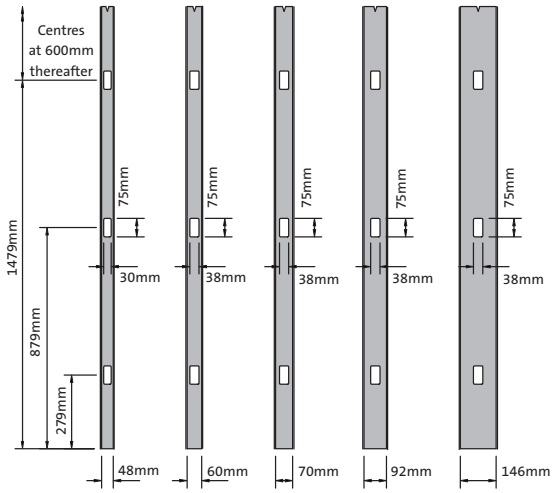

27 Gypframe studs service push-out details - AcouStuds

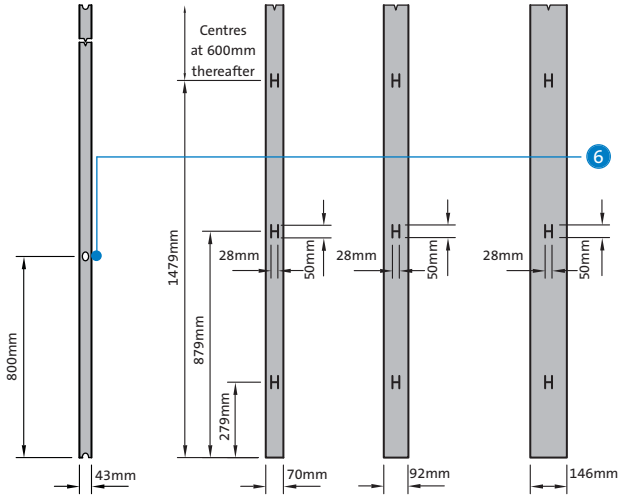

28 Socket box installation – up to 60 minutes fire resistance

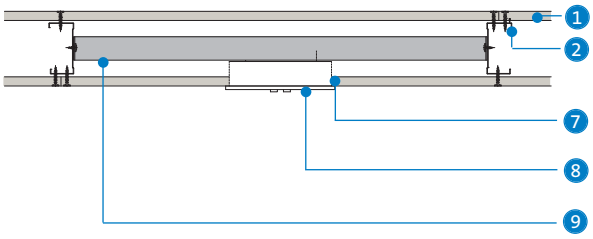

29 Socket box installation – up to 120 minutes fire resistance

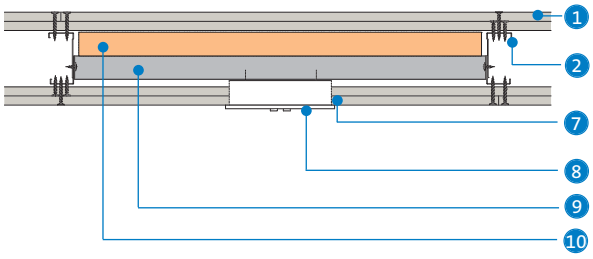

1. Gyproc plasterboard or British Gypsum specialist board
2. Gypframe 'C' Stud
3. Gypframe 150 FC 90
4. Gypframe Service Support Plate
5. 18mm plywood
6. 25mm wide x 35mm high oval cut-out
7. Gyproc Sealant at switch box perimeter for improved acoustics
8. Electrical socket with metal back box fitted tight into plasterboard
9. Gypframe Standard Floor & Ceiling Channel receiving fixing of socket box - channel legs tabbed, bent and fixed to metal studs with Gyproc Wafer Head Drywall Screws
10. Stone mineral wool (minimum 80kg/m³) backing to socket box

NB If Gypframe Service Support Plates are being installed and not immediately boarded, secure plates with a Gyproc Wafer Head Drywall Screw or Gyproc Wafer Head Jack-Point Screw.

30 Opening bridging studs for duct / damper penetration

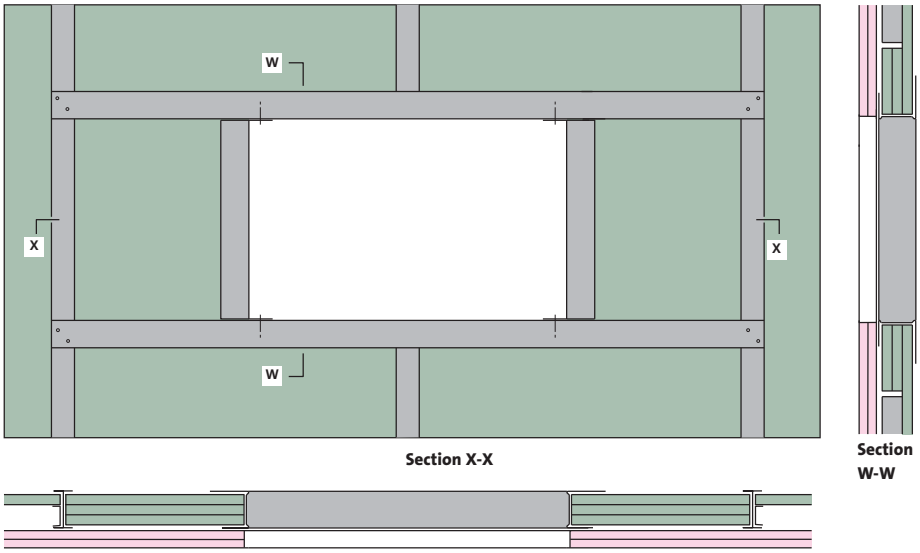

31 Typical opening for service penetrations in fire-rated partitions

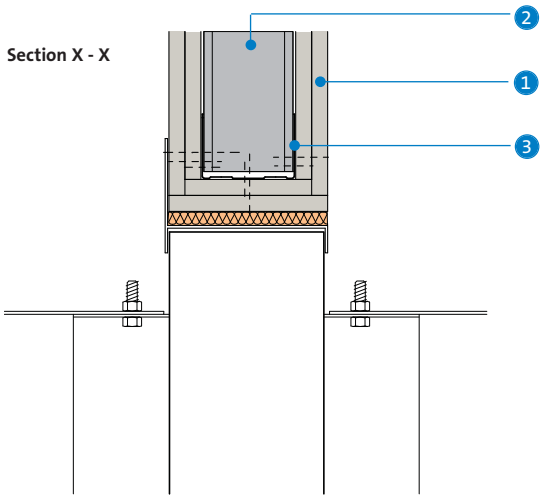

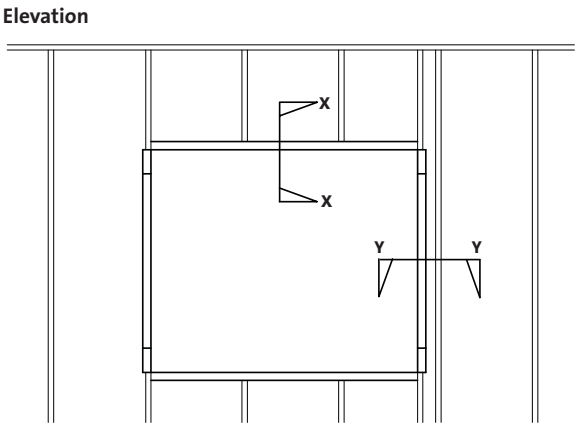

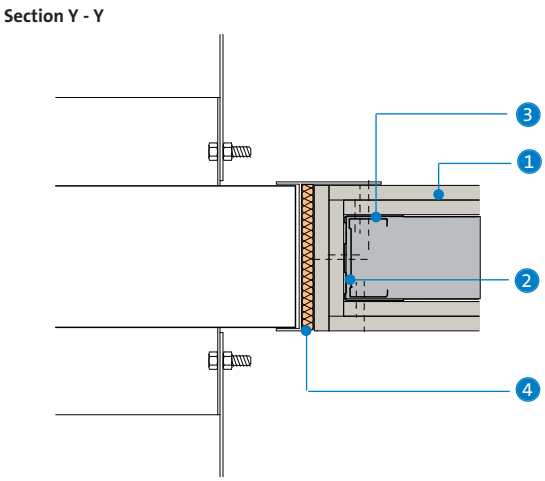

32 Fire rated construction in which the damper is supported by the partition (isometric view)

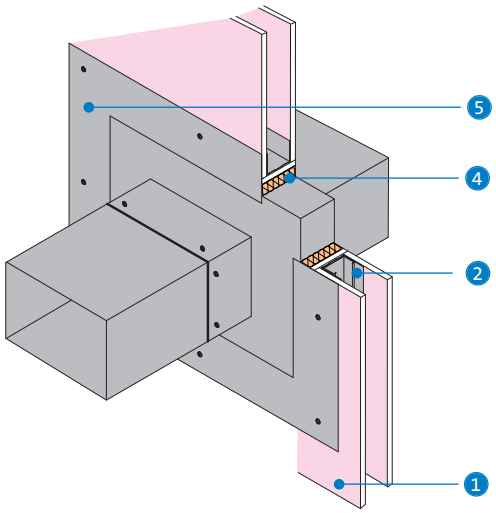

1. Gyproc plasterboard or Glasroc F specialist board
2. Gypframe 'C' Stud
3. Gypframe Floor & Ceiling Channel
4. Penetration seal as tested by damper manufacturer or proprietary alternative, confirmed as compatible by system designer / specifier (plasterboard lining around opening may not be required)
5. Damper (by others). Weight of damper should not exceed 57kg. Size of damper should not exceed 1400 x 1200mm

This section includes updated information, added since it was first published in July 2009. Please see the WHITE BOOK update document for details.
Last updated 24/03/2010

3.6 Standards

General

The following standards, regulations and documents are relevant to the design and specification of internal dry linings and plasters. The list is not exhaustive and it is the responsibility of the designer to ensure that only the most current version of standards, etc, are referenced.

Key standards

EN 520: 2004 Gypsum plasterboards - Definitions, Requirements and Test Methods.

Type A: Gypsum plasterboard: Plasterboard suitable for gypsum plasters or decoration.

Type D: Gypsum plasterboard with control density: These boards have a controlled density, with a face suitable for gypsum plasters or decoration. Improved performance in certain applications is obtainable.

Type E: Gypsum sheathing board: Specifically manufactured to be used as sheathing board in external walls. They are not intended to receive decoration or be permanently exposed to external weather conditions. This type of wallboard has reduced water absorption rate with a minimum water vapour permeability.

Type F: Gypsum plasterboard with improved core adhesion at high temperatures: Plasterboard suitable for gypsum plasters or decoration. These boards have mineral fibres and / or other additives in the gypsum core to improve core cohesion at high temperatures.

Type H: Plasterboard with reduced water absorption rate: Boards suitable for special applications in which reduced water absorption properties are required to improve the performance of the board. These boards are designated Type H1, H2 and H3, with different water absorption performance.

Type I: Gypsum plasterboard with enhanced surface hardness: These boards are used for applications where higher surface hardness is required. Suitable for gypsum plasters or decoration.

Type P: Gypsum baseboard: Boards which have a face intended to receive gypsum plaster. They may be perforated during manufacture.

Type R: Gypsum plasterboard with enhanced strength: Boards for special applications where higher strength is required have both increased longitudinal and transverse breaking loads. Suitable for gypsum plasters or decoration.

NB The performance of the types of gypsum plasterboards defined above may be combined.

BS EN 15283: 2008 Gypsum boards with fibrous reinforcement - Definitions, Requirements and Test Methods

Part 1: Gypsum board with mat reinforcement

Part 2: Gypsum fibre boards

BS EN 13279-1: 2005 Gypsum binders, and gypsum plasters - Definitions and Requirements

BS EN 13963: 2005 Jointing Materials for gypsum plasterboards - Definitions, Requirements and Test Methods

BS EN 14496: 2005 Gypsum based adhesives for Thermal / Acoustic insulation composite panels and plasterboards - Definitions, Requirements and Test Methods

BS EN 13658-1: 2005 Metal lath and beads - Definitions, Requirements and Test Methods - Internal Plastering

Other standards

BS 8000: Workmanship on building sites

Part 8: 1994 Code of Practice for Plasterboard Partitions and Drylinings

Part 10: 1995 Code of Practice for plastering and rendering

BS 8212: 1995 Code of Practice for Drylining and Partitioning using Gypsum Plasterboard

BS EN 13964: 2004 Suspended Ceilings - Requirements and test methods

BS EN 13914-2: 2005 Design, preparation and application of external rendering and internal plastering

BS 8481: 2006 Design, preparation and application of internal gypsum, cement, cement and lime plastering systems - specification

BS 476: Fire tests on building materials and structures

Part 4: 1970 (1984) Non-combustibility test for materials

Part 6: 1989 Method of test for fire propagation for products

Part 7: 1997 Method for classification of the surface spread of flame of products

Part 20: 1987 Methods for determination of the fire resistance of elements of construction (general principles)

Part 21: 1987 Method for determination of the fire resistance of loadbearing elements of construction

Part 22: 1987 Methods for determination of the fire resistance of non-loadbearing elements of construction

Part 23: 1987 Methods for the determination of the contribution of components to the fire resistance of a structure

BS EN 1363: Fire Resistance Tests

Part 1: General requirements

BS EN 1364: Fire Resistance tests for non-loadbearing elements

Part 1: Walls

Part 2: Ceilings

BS EN 1365: Fire Resistance tests for loadbearing elements

Part 1: Walls

Part 2: Floors and Roofs

Part 3: Beams

Part 4: Columns

BS EN 1366: Fire Resistance of service installations

Part 3: Penetration Seals

Part 4: Linear Joint Seals

Part 5: Service ducts and shafts

ENV 13381-4: 2002 Test methods for determining the contribution to the fire resistance of structural members

BS 2750: 1995: Part 3 Methods of measurement of sound insulation in buildings and of building elements

BS 5234: 1992: Specification for performance requirements for strength and robustness

Part 1: Partitions (including matching linings) - Code of practice for design and installation

Part 2: Partitions (including matching linings) - Specification for performance requirements for strength and robustness including methods of test

BS 5268: Structural use of timber

Part 2: 2002 Code of Practice for permissible stress design, materials and workmanship

Part 4.1: 1978 Structural use of timber. Fire resistance of timber structures

Part 6.1: 1996 Dwellings not exceeding seven storeys

BS 5385: 2009 - Wall and floor tiling - Code of practice

Part 1: Design and installation of ceramic, natural stone and mosaic wall tiling in normal conditions

Part 4: Design and installation of ceramic and mosaic tiling in special conditions

BS EN 12004: 2007 Adhesives for tiles. Definitions and specifications

BS 5250: 2002 Code of Practice for the control of condensation in buildings

BS 6100-0: 2002 Glossary of building and civil engineering terms.

Part 0: Introduction

BS 6150: 2006 Code of Practice for painting of buildings

BS EN ISO 140-3: 1995 Acoustics. Measurement of sound insulation in building elements

BS EN ISO 717: 1997 Acoustics. Rating of sound insulation in buildings and of building elements

Part 1: Airborne sound insulation

Part 2: Impact sound insulation

BS 7671: 2008 Requirements for electrical installations. IEE wiring regulations

BS EN ISO 354: 2003 Acoustics. Measurement of sound absorption in a reverberation room

BS EN ISO 11654: 1997 Acoustics. Sound absorbers for use in buildings. Rating of sound absorption

ISO 9001: 2000 Quality management systems - requirements

BS EN 13823: 2002 Reaction to fire tests for building products excluding floors. Single burning item test

BS EN ISO 1182: 2002 Reaction to fire tests for building products. Non-combustibility test

BS EN ISO 1716: 2002 Reaction to fire tests for building products. Determination of the heat of combustion

BS EN ISO 11925-2: 2002 Reaction to fire tests. Ignitability of building products subjected to direct impingement of flame. Single-flame source test

BS 8233: 1999 Sound insulation and noise reduction for buildings. Code of Practice

BS 12524: 2000: Building material and products - Hygrothermal properties - Tabulated design values

BS EN ISO 6946: 1997 Building components and building elements - thermal resistance and thermal transmittance - calculation method

BS 4-1: 2005 Structural steel sections. Specification for hot rolled sections

BS 5950-8: Fire Design Code - Structural Eurocode ENV 1991

BS EN 1313-1: 1997 Rounded and sawn timber - permitted deviations and preferred sizes

Part 1: Softwood sawn timber

BS 5290-8: 2003 Structural use of steelwork in buildings

Part 8: Code of Practice for fire resistant design

BS 9999: 2008 Code of Practice for fire safety in the design, management and use of buildings

Regulations

Building Regulations (England and Wales) 1991, as amended 1992, 1995 and 2000, 2005, Approved Documents

The Scottish Building Regulations, Technical Handbooks

Health Technical Memoranda

HTM 56 Partitions

HTM 60 Ceilings

HTM 05-02 Firecode: Fire precautions in new hospitals

HTM 08-01 Acoustic Requirements

Building Bulletins

BB93: Acoustic Design in Schools - A Design Guide

BB100: Design of Fire Safety in Schools

BB87: Guidelines for Environmental Design in Schools

BREEAM

The Code for Sustainable Homes
BREEAM: Healthcare
BREEAM: Education
BREEAM: Offices
BREEAM: Courts
BREEAM: Industrial
BREEAM: Prisons
BREEAM: Retail
BREEAM: Multi-Residential
BREEAM: Bespoke
BREEAM: Ecohomes
BREEAM: Ecohomes XB

BBA Certificates

90/2541: Gyproc MultiBoard (Glasroc F MULTIBOARD)

93/2935: Glasroc s (Glasroc F FIRECASE)

90/2544: Glasroc SoffitLine (Glasroc F SOFFITLINE)

Other reference documents

BRE Digest 334 - Sound Insulation of separating walls and floors

Fire Protection for Structural Steel Members, Association of Specialist Fire Protection ASFP Yellow Book

BRE Green Guide to Specification

BRE BR128 Guidelines for the construction of fire resisting elements - 1988

LPC (Loss Prevention Council) Design Guide

BRE BR443 U-value conventions

BRE BR262 Thermal Insulation - avoiding risks

4 Health and Safety

Overview

This section is a practical guide to the manual lifting and handling of British Gypsum products both safely and successfully. The pictures and advice are designed to help you get the best results from our products. Please use them alongside your project's own design criteria and your usual good practice and site safety precautions.

Introduction

British Gypsum recognises the increasing importance of Health and Safety at work. We've been working with Pristine Condition, experts in lifting and handling, to develop a series of 'Safe Systems of Work' for manual handling and lifting of our products.

The simple guidance in this section suggests appropriate methods for handling British Gypsum products, including Gyproc plasterboards, Thistle plasters, Gypframe metal sections, British Gypsum specialist boards and British Gypsum ceiling products.

More detailed information is available on the Product Data Sheets, available to download from **www.british-gypsum.com**

Information is also included on specialist handling equipment, as featured within the Gyproc Tools Catalogue, available to download from **www.artexltd.com/products/professional_tools_products**

For more detailed information, please refer to the EUROGYPSUM report on manual handling, available to download from **www.eurogypsum.org**

Legislation and regulations

The details and guidance contained in this book and associated literature produced by British Gypsum meet relevant legislative and regulatory requirements and standards current at the date of publication of this document. It is the responsibility of the user to ensure that these remain current prior to use.

Customers are also reminded that under the Health and Safety at Work Act 1974 and the following subsequent regulations - Management of Health and Safety at Work Regulations, the Provision and Use of Work Equipment Regulations and the Personal Protective Equipment Regulations - that employers are under a duty to ensure that all risks associated with the use of equipment are properly assessed, that employees are informed of such and, where applicable, are instructed, trained and supervised in the proper use of such work equipment and protective equipment. The extent of instruction, training and supervision required will depend on the employees existing competence necessary to use the work equipment with due regard for Health and Safety.

Health and Safety

The products and systems included in this document have been developed for use in domestic, commercial and industrial buildings. Simple guidance on how to install these products and systems is given at the start of each relevant section. More detailed and practical installation guidance is given in the British Gypsum **SITE** BOOK, available to download from www.british-gypsum.com

It is important to follow good site practice at all times and to ensure that appropriate safety precautions are taken, including the use of appropriate personal protection equipment and clothing when working with British Gypsum products.

The following general notes on 'Safe Systems of Work' are offered for guidance:

Personal protection equipment (PPE)

- Always wear Personal Protection Equipment (PPE) as directed on site.
- Hard hat and safety shoes are required at all times.
- Keep hands warm and dry - dressing warmly in cold weather helps stay warm. Wear gloves and change them if they get wet.
- Always wear gloves when handling, carrying, cutting or fixing metal.
- Wear safety glasses and dust mask when handling or mixing plaster ingredients and additives, applying ingredients and additives or applying plaster, finishing ceilings or sanding.
- Wear safety glasses when snipping metal pieces, such as corner beads, trims, and wire mesh.
- Do not continue to work if safety glasses become fogged due to condensation. Stop work and clean the glasses until the lenses are clear and de-fogged.

Installation

- British Gypsum drylining systems are not designed to support body weight. Fixers must work from an independent support system.
- When cutting boards, power and hand tools should be used with care and in accordance with the manufacturers' recommendations. Appropriate PPE should be used.
- Keep sanding and other dust generation to a minimum. Maintain adequate ventilation and / or wear suitable protection.
- Power tools should only be used by people who have been instructed and trained to use them safely.

Storage

- Store plasterboard, plasterboard accessories, metal sections and plasters in dry conditions.
- Protect primers and ready-mixed materials from freezing conditions.
- Practice good housekeeping and stock rotation.
- Don't attempt to separate boards using the forks of a fork-lift truck.
- Don't use hoists or cranes without safety retaining ropes / slings.
- When using powdered products, mix with water in well ventilated conditions. Avoid contact with eyes and skin. In the event of contact with the eyes, irrigate with plenty of clean water immediately, and seek first aid.
- When handling insulation or cutting board products containing glass-fibre, wear suitable protection including appropriate face mask and gloves. Wear goggles when working overhead.

Manual lifting and handling

- Wherever possible, place one foot in front of the other to produce a good base and reduce the pressure on the body.
- Assess the load by placing your hand on it and moving it.
- Only handle what you feel you can manage safely and comfortably.
- Initiate movements with your legs, unlocking the knees and driving with the legs to start the lift.
- Keep the load as close, or get as close as possible to the load , when lifting or handling.
- Turn instead of twisting and move your feet.
- Let your back find its natural curvature.
- Never lose control of the load.

Work methods

- Rest for 15 seconds, many times throughout the day. Some studies have shown that micro pauses (short breaks) reduce stress and can lead to an increase in productivity [1].
- Rotate jobs; if one part of the job requires a lot of overhead work, switch for a while to an activity that uses different work motions.

[1] Musculoskeletal problems in bricklayers, carpenters and plasterers: literature review and results of site visits, Health and Safety Laboratory, Sheffield: Health and Safety Executive, 2001.

Handling and storage

British Gypsum fully accepts its responsibilities as a supplier of building materials and systems as required by Section 6 of the Health and Safety at Work Act 1974. However, in designing and installing systems incorporating British Gypsum products, full consideration must be taken of the legal requirements of:

- Manual Handling Operations Regulations.
- Construction (Design and Management) Regulations.
- Control of Substances Hazardous to Health Regulations (COSHH).

Your attention is brought to the following publications which give approved guidance:

- Manual Handling Guidance on Regulations ISBN 0 71762823X.
- Managing Health and Safety in Construction. Construction (Design and Management) Regulations ISBN 9 780717662234.
- Designing for Health and Safety in Construction ISBN 0 717608077.

Loading and unloading pallets

PPE: Hard hat, hi-vis and safety shoes required.

- Always place one foot forward by operating from the corner of the pallet or placing one foot on the pallet, taking care to ensure that the pallet does not tip in the process.
- Unlock the knees for low level work.
- Take a firm grip of the load with both hands.
- Lift using the legs to start the movement.
- Always keep the load close when carrying.
- **DO NOT LIFT WITH FEET IN LINE OR WITH LOAD IN FRONT OF THE FRONT FOOT.**

Mixing of bagged products

PPE: Mask, eye protection, hard hat, hi-vis and safety shoes required.

Emptying bags into a mixer

- Always place one foot down by the side of the mixing container.
- Unlock the knees if necessary.
- **DO NOT EMPTY BAGS WITH FEET IN LINE.**

When mixing

- Keep the foot to the side of the mixing container.
- Unlock the knees if necessary.
- Maintain a balanced position.
- **DO NOT WORK WITH FEET IN LINE.**

Picking from mid level

PPE: Hard hat, hi-vis and safety shoes required.

- Place one foot forward.
- Take a firm grip of the load.
- Pull the load to a point of pivot (using the legs if necessary).
- Pivot against the stack.
- Keep the load close.
- **DO NOT TWIST.**
- **DO NOT PICK WITH FEET IN LINE.**

Handling buckets

PPE: Hard hat, gloves, hi-vis and safety shoes required.

- Always place one foot alongside the bucket before lifting, or pivot the bucket towards you before lifting.
- Take a firm grip with both hands.
- If heavy, you may need to tilt and take a grip of the base and the top of the bucket.
- Start the lift with the legs.
- Unlock the knees for low level work.
- Always turn by moving the feet.
- If taking two buckets, always carry in a balanced manner.
- Only handle what you can manage.
- **DO NOT CARRY HEAVY OBJECTS ON ONE SIDE.**
- **DO NOT TWIST.**

Handling lengths of metal

PPE: Gloves, hard hat, hi-vis and safety shoes required.

- Always approach the lengths of metal from one end.
- Place one foot forward.
- Unlock the knees for low level work.
- Take a firm grip.
- Lift using the legs to start the movement.
- **DO NOT PICK FROM THE MIDDLE OF THE STACK.**

EITHER

- Work your way to the middle.
- Pivot the stack and carry in a balanced manner.

OR

- Place over the shoulder.
- Work your way to the middle (point of balance).
- Unlock the knees to rest the stack against the shoulder.
- Allow the stack to pivot against the shoulder as you stand up.
- Only carry over the shoulder if you can remain upright.
- Be aware of your surroundings when carrying lengths of metal in this way.
- **DO NOT LEAN.**

If removing from racks

PPE: Gloves, hard hat and safety shoes required.

- Place one foot forward.
- Drive with the legs to bring the load to one end.
- Carry in a balanced manner.
- Always communicate during the lifts and carrying.

Handling boards

PPE: Hard hat, gloves, hi-vis and safety shoes required.

One person operation

- Pull the board in towards yourself.
- Unlock the knees for low level work.
- Lift by using the legs.
- Try using handles for carrying plasterboard.
- Improve your grip and help to make the lift less awkward.
- Tools are available to reduce the time you spend in overhead work and holding, to help hold boards in place for fixing.
- Use team lifting where appropriate.
- Carry the board in a balanced manner (for large boards, you can support the board on the top of the chest/ shoulder).
- Only lift what you feel you can manage.
- If necessary, seek assistance.
- When stacking boards, position boards sideways slightly in front of you, so you do not have to reach over your head or twist your body to lift them.
- Position panels to lean flat against a wall and do not wobble or slide.
- Push and slide panels along their edge or get assistance from a co-worker.

Two person operation

- Operate from the corners of the stack.
- Unlock the knees for low level work.
- Lift board together to vertical position.
- Only lift what you feel you can manage.
- Carry in a balanced manner across the body.
- If walking backwards, ensure it is over the shortest possible distance and clear the route beforehand.
- **DO NOT CARRY HEAVY OBJECTS ON ONE SIDE.**

Carrying board up / down stairs

PPE: Hard hat, gloves, hi-vis and safety shoes required.

- Whether going up or down stairs, place one foot forward then bring both feet together on each step.
- Keep the boards in a balanced manner.
- Place both feet on each step before moving off to improve control and balance throughout the lift.
- Work together and in time.
- Stop wherever necessary (if steps are in poor order, or have a deeper drop, you may need to place the load down first).
- Only lift what you feel you can manage.

Fixing walls

PPE: Eye protection, gloves, hard hat, hi-vis and safety shoes required.

- Operate in a balanced manner.
- Always keep one foot forward.
- Unlock the knees for low level work.
- Always work in front of the body.
- Use appropriate platforms where necessary.
- **DO NOT OVER-REACH OR STRETCH TO THE SIDES OR ABOVE THE HEAD.**

Lifting plasterboards into place (including ceilings) - two person operation

PPE: Eye protection, hard hat, gloves, hi-vis and safety shoes required.

- Communicate – work together.
- Take a firm grip of the board in both hands.
- Unlock the knees to place board into position.
- Always work in front of the body.

Fixing ceilings

PPE: Eye protection, hard hat and safety shoes required.

- Always work in a balanced position.
- Operate with one foot forward.
- Keep the body upright.
- Always use appropriate platforms where necessary.
- **DO NOT OVER- REACH.**

All content and imagery in this section has been produced in association with

5 Sustainability

Overview

Sustainability is increasingly important in specifying products and systems. As manufacturing and construction are often perceived to make heavy demands on the environment, British Gypsum is committed to minimising its impact on valuable natural resources and driving sustainable development in the UK.

Delivering sustainable buildings relies on the balancing of social, environmental and economic objectives. Our sustainability programme highlights the importance of environmental management, it focuses on the conservation of the environment and natural resources through a managed programme of waste reduction, pollution prevention, energy efficiency and the manufacture of sustainable construction products and systems. Although environmental management is a key concern our programme also covers the social and economic pillars of sustainability.

In November 2008 British Gypsum became the first plaster and plasterboard manufacturer to achieve ISO 14001:2004 certification across all of our manufacturing and mining sites in the UK. The certification follows extensive external assessment by the British Standards Institute (BSI), reinforcing our policy of continuous improvement and ensuring that all of our operations work within well-defined environmental guidelines.

Environmental sustainability

Environmental Management - ISO 14001:2004

As part of our drive to continuously improve our performance, we have invested significant resource in developing environmental management systems certified to ISO 14001:2004.

In preparation for Integrated Pollution Prevention and Control regulations in 2006, we developed our environmental management systems to bring them in line with the internationally accepted ISO 14001 standard. In November 2008 British Gypsum became the first plaster and plasterboard manufacturer to achieve ISO 14001:2004 certification across all of its manufacturing and mining sites in the UK.

This certification emphasises the stringent environmental standards maintained across the business and will enable British Gypsum to support customers through the delivery of sustainable construction products as advocated by BREEAM, the Code for Sustainable Homes and the BRE Green Guide.

Part of British Gypsum's sustainability strategy is to optimise the use of recycled and reclaimed raw materials in the manufacture of products, designing them to minimise unnecessary waste, and to provide facilities to reclaim and recycle post-consumer waste.

Recycled content of plasterboard

British Gypsum gypsum-based plasterboards and ceiling products have a very high recycled content, as detailed below:

- The products are manufactured using gypsum sourced largely as synthetic DSG (desulphogypsum), a by-product of the flue gas desulphurisation process at coal-fired power stations.
- Plasterboard is a highly sustainable product - new plasterboard may have a recycled content of almost 100% and nearly all plasterboard is 100% recyclable after use. As a result, plasterboard often has the highest recycled content of any construction products in new buildings.
- Although the industry maximum for recycled plasterboard content is currently at 18% it is possible this figure will increase in the future as new recycling technology and techniques become available.
- The paper liners on our plasterboards are made from 97% recycled paper and cardboard.

Plasterboard line at East Leake

Plasterboard recycling

British Gypsum pioneered post-consumer plasterboard waste recycling in the UK, with the launch of our fully integrated Plasterboard Recycling Service (PRS) in 2001.

- Over 96% of our on-site production waste is recovered back into the manufacturing process. The remaining element is disposed of via responsible routes, such as animal bedding and soil conditioning.
- Using specialist waste partners to process and separate contamination ensures that 100% of plasterboard waste delivered back to the two dedicated reclaim sites is recycled back into the product mix. We are currently responsible for recycling more than 75% of all plasterboard waste recycled into new plasterboard in the UK.
- British Gypsum works closely with customers to minimise contamination of plasterboard waste at source. During 2007, contamination in the form of screws / nails, wood, plastic, etc, accounted for less than 5% of total waste collected. Wherever possible this contamination material goes through other specified waste disposal routes, to avoid landfill.

NB The figures quoted above are typical rates across our range of plasterboard products.

The Building Research Establishment Environmental Assessment Method (BREEAM)

BREEAM is an established environmental assessment method for buildings. To date, over 65,000 buildings in the UK have been certified. It provides a robust, tried and tested means of rating the sustainability performance of a building and its environment in the following areas:

- Management
- Health and wellbeing
- Energy
- Transport
- Water
- Materials
- Waste
- Land use and ecology
- Pollution

Credits are awarded in each area corresponding to performance. These credits are then weighted and added together to produce a single, overall score. The building is then rated as follows:

BREEAM				
Pass	Good	Very good	Excellent	Outstanding

The following list shows which building types are covered by which BREEAM framework:

- BREEAM: Courts
- BREEAM: Education
- BREEAM: Healthcare
- BREEAM: Industrial - light industrial units, warehouses and workshops
- BREEAM: Offices
- BREEAM: Prisons
- BREEAM: Retail
- BREEAM: Multi-residential - sheltered homes, nursing homes, and student accommodation
- BREEAM: EcoHomes
- BREEAM: EcoHomes XB – existing buildings
- BREEAM: Bespoke - other buildings not already covered

In England a very good rating or better to BREEAM: Education is required for all government funded new-build primary schools valued at £500k or greater, and secondary schools at £2M or greater.

For further information, refer to the **WHITE** BOOK Education sector guide, available to download from www.british-gypsum.com

In April 2007 Ecohomes was replaced by the Code for Sustainable Homes for the assessment of new housing in England. EcoHomes 2006 will continue to be used for refurbished housing in England and for all housing in Scotland and Wales.

The Code For Sustainable Homes (the Code)

The Code was introduced to drive a step-change in sustainable home building practice. It is a means of driving continuous improvement, greater innovation and exemplary achievement in sustainable home building.

The Code is a standard for key elements of design and construction which affect the sustainability of a new home. It is set to become the single national standard for sustainable homes, used by home designers and builders as a guide to development, and by home-buyers to assist in their choice of home.

The Code measures the sustainability of a home against design categories in the following areas:

- Energy and CO_2 Emissions
- Water
- Materials
- Surface water run off
- Waste
- Pollution
- Health and wellbeing
- Management
- Ecology

Recycling plasterboard waste

Credits are awarded in each area corresponding to performance. These credits are then weighted and added together to produce a single, overall score.

The Code uses a sustainability rating system – indicated by 'stars', to communicate the overall sustainability performance of a home. A home can achieve a sustainability rating from one star (★) to six stars (★★★★★★) depending on the extent to which it has achieved Code standards. The code states that one star is the entry level, a step above the level of Building Regulations, and six stars is the highest level, reflecting exemplar development in sustainability terms.

From 1st May 2008 it became mandatory to provide a rating against the Code for new-build homes, ensuring that all buyers are given clear information about the sustainability of their new home.

However, this new requirement does not make it mandatory to build a Code home or to have each new home assessed against the Code.

In England and Wales, code level 3 is required for all government funded social housing.

For information please refer to **Home**Spec, available to download from www.british-gypsum.com

Assessments are carried out by independent organisations that are licensed and trained by the BRE. For each assessment, the assessor will produce a report detailing the development's performance against each of the criteria and its overall BREEAM or Code rating. Upon satisfactory completion of the assessment, the client is presented with a certificate that confirms the development's BREEAM or Code performance.

To achieve good performances in an efficient manner, the BRE recommends that an experienced and suitably qualified sustainability professional familiar with BREEAM or the Code is employed to work in advance of the BREEAM assessor. This involvement should occur at an early stage in the design process.

Further guidance on how British Gypsum products, systems and services can help in gaining additional credit(s) is available from the British Gypsum Drywall Academy.

To contact a licensed BREEAM assessor visit www.breeam.org/assessors

Green Guide

The UK Gypsum Products Development Association (GPDA) has co-ordinated the assessment of gypsum-based drylining products by the Building Research Establishment (BRE) as part of the Green Guide to Specification, launched in 2008.

"The Green Guide to Specification is an easy-to-use publication, providing guidance for specifiers, designers and their clients on the relative environmental impacts of over 250 elemental specifications for roofs, walls, floors etc"

As stated on the BRE website the Green Guide can be accessed by visiting the website at www.thegreenguide.org.uk

The GPDA and the BRE have generated data for drylining products, described within the Green Guide as components. These components are grouped together into elements, each of which represents a particular system solution for given sector applications, e.g. schools and hospitals, and are rated in terms of sustainability performance by means of a proprietary calculation method developed by the BRE. It is central to British Gypsum's product development strategy that all relevant systems listed within the Green Guide will achieve the highest possible sustainability performance rating.

Designers and specifiers seeking current ratings information should refer to the Green Guide website, which is being continuously developed and updated, to reflect sector and system development. British Gypsum's sustainability strategy means that, over time, ratings specific to British Gypsum's products will be subject to continuous improvement.

British Gypsum Sherburn works

GypWall CLASSIC

The definitive metal stud partition system

This section includes updated information, added since it was first published in July 2009. Please see the WHITE BOOK update document for details.
Last updated 21/01/2011

Aylesbury College, Buckinghamshire

GypWall CLASSIC

34 – 61 R_w dB

30 – 120 mins

GypWall CLASSIC is the industry's original lightweight drywall partition system, providing cost-effective, multi-purpose solutions suitable for all types of buildings.

A

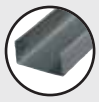

Gypframe 'C' Stud

OR

Gypframe AcouStud

Key facts

- Range of stud options to match performance requirements
- Acoustic stud option for enhanced acoustic performance
- Satisfies *BS 5234* requirements up to and including Severe Duty[1]
- 30 - 120 minutes fire resistance to EN and BS standards
- Achieves high levels of sound insulation up to R_W 61 dB
- Accommodates services within the stud cavity
- Can allow for deflection at the head
- Gypframe metal framework will not twist, warp or rot
- Lightweight system solutions

[1] Refer to **section 3.4.2 - Principles of robust design**.

Applications

Due to the design flexibility of British Gypsum systems, they can be tailored to meet the requirements of a wide range of applications.

Sector

- ✓ Office / commercial
- ✓ Education
- ✓ Housing
- ✓ Retail
- ✓ Healthcare
- ✓ Apartment buildings
- ✓ Sport and leisure
- ✓ Industrial
- ✓ High-rise multi-occupancy

System components

Gypframe metal products

	48 S 50 'C' Stud	**Length** 2400, 2700mm 3000, 3600mm
	70 S 50 'C' Stud[1]	**Length** 2400, 2700, 3000mm 3600, 4200mm
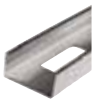	**92 S 50 'C' Stud**[1]	**Length** 3600, 4200mm
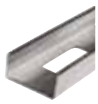	**146 S 50 'C' Stud**	**Length** 2400, 2700mm 3000, 4200mm
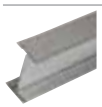	**70 I 50 'I' Stud**	**Length** 3600, 4200mm
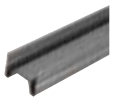	**70 AS 50 AcouStud**	**Length** 2400, 2700, 3000mm 3600, 4200mm
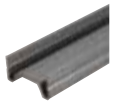	**92 AS 50 AcouStud**	**Length** 3600, 4200mm
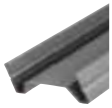	**146 AS 50 AcouStud**	**Length** 3600mm
	Floor & Ceiling Channels Standard (C), Deep Flange Floor & Ceiling Channel (DC) and Extra Deep Flange Floor & Ceiling Channel (EDC). All channels are available in 3600mm only.	
	99 FC 50 Fixing Channel	**Length** 2400mm
	150 FC 90 **Fixing Channel**	**Length** 1197mm
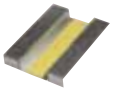	**Service Support Plate** For the installation of plywood within a partition cavity.	**Length** 130mm
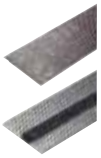	**GFS1 Fixing Strap** **or** **GFT1 Fixing 'T'**	**Length** 2400mm **Length** 2400mm
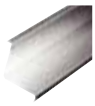	**GA5 Internal Fixing Angle**	**Length** 3600mm
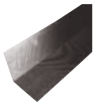	**GA6 Splayed Angle**	**Length** 2400, 3600mm

[1] Gypframe 70 S 60 and 92 S 60 'C' Studs will be required for **GypWall CLASSIC** incorporating Gyproc Ergo900.

Board products

	Gyproc WallBoard[2] Thickness Width	 12.5, 15mm 1200mm
	Gyproc FireLine[2] Thickness Width	 12.5, 15mm 1200mm
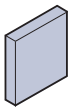	**Gyproc SoundBloc**[2] Thickness Width	 12.5, 15mm 1200mm
	Gyproc Plank Thickness Width	 19mm 600mm
	Gyproc Ergo900 Thickness Width	 12.5mm 900mm
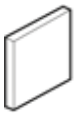	**Glasroc F MULTIBOARD** Thickness Width	 10, 12.5mm 1200mm

[2] Moisture resistant boards are specified in intermittent wet use areas, e.g. shower cubicles.

Fixing and finishing products

Gyproc Wafer Head Drywall Screws
For Gypframe metal-to-metal fixing less than 0.8mm thick ('I' studs less than 0.6mm thick).
or
Gyproc Wafer Head Jack-Point Screws
For Gypframe metal-to-metal fixing 0.8mm thick or greater ('I' studs 0.6mm thick and greater).

Gyproc Drywall Screws
For fixing boards to Gypframe metal framing less than 0.8mm thick ('I' studs less than 0.6mm thick).
or
Gyproc Jack-Point Screws
For fixing boards to Gypframe metal framing 0.8mm thick or greater ('I' studs 0.6mm thick and greater).

Gyproc Sealant
Sealing air paths for optimum sound insulation.

Gyproc jointing materials
For seamless jointing.

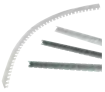

Gyproc edge and angle beads
Protecting and enhancing board edges and corners.

Always use genuine branded British Gypsum components to qualify for **SpecSure**® lifetime warranty

Fixing and finishing products (continued)

Gyproc Control Joint
To accommodate structural movement.

Gyproc FireStrip
For fire-stopping deflection heads.

Thistle Board Finish or Thistle Multi-Finish
To provide a plaster skim finish.

or

Thistle Durafinish
To provide improved resistance to accidental damage.

Insulation products

Isover APR 1200
25mm, 50mm and 75mm, for improved acoustic performance.

Stone mineral wool (by others)
For fire-stopping.

Installation overview

Gypframe Floor & Ceiling Channel is fixed at the head and base. Gypframe studs are fitted vertically to a friction-fit within the channel sections, and to abutments, to form the framework. This allows for adjustment during boarding. Studs are fitted so as to all face the same way. Additional framing is installed as required to support heavy fixtures.

Boards are screw-fixed to framing members to form the lining. Horizontal board-end joints of face lining boards should be backed with Gypframe GFS1 Fixing Strap (single and double layer) or Gypframe GFT1 Fixing 'T' (single layer only).

Openings
Details for openings differ according to Duty requirements. See **Design - Door openings** later for further details.

Services
Electrical and other services are normally installed after one side is boarded. Horizontal runs are routed through pre-formed cut-outs in the studs. Gypframe 99 FC 50 Fixing Channel can be installed between studs to support recessed switch boxes / socket outlets, or a high performance socket box detail used where higher acoustic performance is required.

For full installation details, refer to the British Gypsum **SITE** BOOK, available to download from www.british-gypsum.com

For full installation details, refer to the British Gypsum **SITE BOOK**, available to download from www.british-gypsum.com

Performance (▶ Refer to **section 3 - Basic principles of system design**)

EN

Table 1a – GypWall CLASSIC 48mm Gypframe 'C' Studs - single and double layer board linings
Solutions to satisfy the requirements of *BS EN 1364-1: 1999*

SPECSURE LIFETIME SYSTEM WARRANTY

1
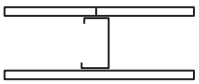

One layer of board each side of 48mm Gypframe 'C' Studs at 600mm centres. Linings as in table.

2
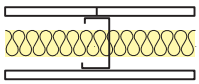

One layer of board each side of 48mm Gypframe 'C' Studs at 600mm centres. 25mm Isover APR 1200 in the cavity. Linings as in table.

3
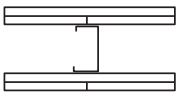

Two layers of board each side of 48mm Gypframe 'C' Studs at 600mm centres. Linings as in table.

4
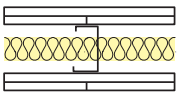

Two layers of board each side of 48mm Gypframe 'C' Studs at 600mm centres. 25mm Isover APR 1200 in the cavity. Linings as in table.

For single layer Severe Duty solutions please also refer to **GypWall ROBUST** and **GypWall EXTREME** sections

Detail	Partition thickness mm	Board type	Lining thickness mm	Max. partition height[1] mm	Sound insulation R_w dB	Duty rating	Approx. weight kg/m²	System reference
30 minutes fire resistance EN								
1	75	WallBoard	1 x 12.5	2500	34	Medium	18	A206001
1	75	SoundBloc	1 x 12.5	2500	37	Medium	22	A206152
2	75	WallBoard	1 x 12.5	2500	40	Medium	18	A206033
2	75	SoundBloc	1 x 12.5	2500	43	Medium	22	A206184
1	80	WallBoard	1 x 15	2800	36	Medium	22	A206002
1	80	SoundBloc	1 x 15	2800	39	Medium	26	A206153
2	80	WallBoard	1 x 15	2800	42	Medium	22	A206034
2	80	SoundBloc	1 x 15	2800	44	Medium	26	A206185
3	100	WallBoard	2 x 12.5	3400	42	Severe	35	A206003
4	100	WallBoard	2 x 12.5	3000	49	Severe	35	A206035
60 minutes fire resistance EN								
1	75	Glasroc F MULTIBOARD	1 x 12.5	2500	36	Severe	25	G106010
1	80	FireLine	1 x 15	2800	36	Heavy	24	A206066
2	80	FireLine	1 x 15	2800	42	Heavy	24	A206098
3	100	SoundBloc	2 x 12.5	3000	46	Severe	43	A206154
4	100	SoundBloc	2 x 12.5	3000	51	Severe	43	A206186
3	110	WallBoard	2 x 15	3700	45	Severe	42	A206004
90 minutes fire resistance EN								
3	100	FireLine	2 x 12.5	3400	42	Severe	40	A206067
3	110	SoundBloc	2 x 15	3000	49	Severe	51	A206155
4	110	SoundBloc	2 x 15	3000	53	Severe	51	A206187
120 minutes fire resistance EN								
3	100	FireLine	2 x 12.5	3000	42	Severe	40	A206067
4	100	FireLine	2 x 12.5	3000	49	Severe	40	A206099
3	110	FireLine	2 x 15	3700	45	Severe	49	A206156

[1] The maximum heights quoted are limited by the fire state field of application or by limiting deflection of L/240 at 200 Pa, whichever is the more onerous.

NB The fire resistance and sound insulation performances are for imperforate partitions, walls and ceilings incorporating boards with all joints taped and filled, or skimmed according to British Gypsum's recommendations. The quoted performances are achieved only if British Gypsum components are used throughout, and the Company's fixing recommendations are strictly observed. Any variation in the specifications should be checked with British Gypsum.

Table 1b – GypWall CLASSIC 48mm Gypframe 'C' Studs - single and double layer board linings
Solutions to satisfy the requirements of *BS 476: Part 22: 1987*

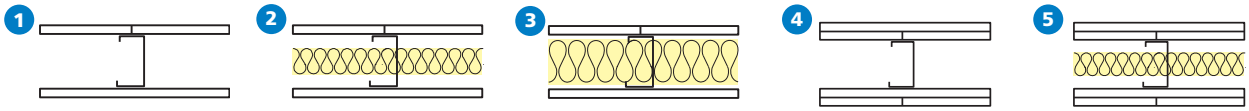

1. One layer of board each side of 48mm Gypframe 'C' Studs at 600mm centres. Linings as in table.
2. One layer of board each side of 48mm Gypframe 'C' Studs at 600mm centres. 25mm Isover APR 1200 in the cavity. Linings as in table.
3. One layer of board each side of 48mm Gypframe 'C' Studs at 600mm centres. 50mm Isover APR 1200 in the cavity. Linings as in table.
4. Two layers of board each side of 48mm Gypframe 'C' Studs at 600mm centres. Linings as in table.
5. Two layers of board each side of 48mm Gypframe 'C' Studs at 600mm centres. 25mm Isover APR 1200 in the cavity. Linings as in table.

For single layer Severe Duty solutions please also refer to **GypWall ROBUST** and **GypWall EXTREME** sections

Detail	Partition thickness mm	Board type	Lining thickness mm	Max. partition height[1] mm	Sound insulation R_w dB	Duty rating	Approx. weight kg/m²	System reference
30 minutes fire resistance BS								
1	70	Glasroc F MULTIBOARD	1 x 10	2500	35	Heavy	20	G106006
1	75	WallBoard	1 x 12.5	2500	34	Medium	18	A206001
1	75	SoundBloc	1 x 12.5	2500	37	Medium	22	A206152
2	75	WallBoard	1 x 12.5	2500	40	Medium	18	A206033
2	75	SoundBloc	1 x 12.5	2500	43	Medium	22	A206184
1	80	WallBoard	1 x 15	2800	36	Medium	21	A206002
1	80	SoundBloc	1 x 15	2800	39	Medium	26	A206153
2	80	WallBoard	1 x 15	2800	42	Medium	21	A206034
2	80	SoundBloc	1 x 15	2800	44	Medium	26	A206185
60 minutes fire resistance BS								
3	70	Glasroc F MULTIBOARD	1 x 10	2500	43	Heavy	20	G106008
1	75	Glasroc F MULTIBOARD	1 x 12.5	2500	36	Severe	25	G106010
1	80	FireLine	1 x 15	2800	36	Heavy	24	A206066
2	80	FireLine	1 x 15	2800	42	Heavy	24	A206098
4	100	WallBoard	2 x 12.5	3400	42	Severe	35	A206003
4	100	SoundBloc	2 x 12.5	3400	46	Severe	43	A206154
5	100	WallBoard	2 x 12.5	3400	49	Severe	35	A206035
5	100	SoundBloc	2 x 12.5	3400	51	Severe	43	A206186
90 minutes fire resistance BS								
4	110	WallBoard	2 x 15	3700	45	Severe	42	A206004
4	110	SoundBloc	2 x 15	3700	49	Severe	51	A206155
5	110	WallBoard	2 x 15	3700	49	Severe	42	A206036
5	110	SoundBloc	2 x 15	3700	53	Severe	51	A206187
120 minutes fire resistance BS								
4	90	Glasroc F MULTIBOARD	2 x 10	3100	41	Severe	40	G106011
4	100	FireLine	2 x 12.5	3400	42	Severe	40	A206067
5	100	FireLine	2 x 12.5	3400	49	Severe	40	A206099

[1] Based on a limiting deflection of L/240 at 200 Pa. Greater heights can be achieved through the use of Gypframe 'I' Studs, or reduced stud centres. Refer to **section 3.4.2 - Principles of robust design**.

NB The fire resistance and sound insulation performances are for imperforate partitions, walls and ceilings incorporating boards with all joints taped and filled, or skimmed according to British Gypsum's recommendations. The quoted performances are achieved only if British Gypsum components are used throughout, and the Company's fixing recommendations are strictly observed. Any variation in the specifications should be checked with British Gypsum.

NBS work section K10 - Plasterboard drylinings / partitions / ceilings

Performance (▶ Refer to **section 3 - Basic principles of system design**)

EN

Table 2a – GypWall CLASSIC 70mm Gypframe 'C' Studs - single layer board linings
Solutions to satisfy the requirements of *BS EN 1364-1: 1999*

1

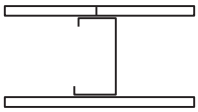

One layer of board each side of 70mm Gypframe 'C' Studs at 600mm centres. Linings as in table.

2

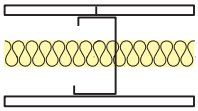

One layer of board each side of 70mm Gypframe 'C' Studs at 600mm centres. 25mm Isover APR 1200 in the cavity. Linings as in table.

3

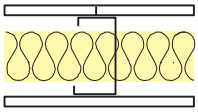

One layer of board each side of 70mm Gypframe 'C' Studs at 600mm centres. 50mm Isover APR 1200 in the cavity. Linings as in table.

For single layer Severe Duty solutions please also refer to **GypWall ROBUST** and **GypWall EXTREME** sections

Detail	Partition thickness mm	Board type	Lining thickness mm	Max. partition height[1] mm	Sound insulation R_w dB	Duty rating	Approx. weight kg/m²	System reference
30 minutes fire resistance EN								
1	97	WallBoard	1 x 12.5	3600	36	Medium	18	A206013
1	97	SoundBloc	1 x 12.5	3600	40	Medium	22	A206164
2	97	WallBoard	1 x 12.5	3600	42	Medium	18	A206045
3	97	WallBoard	1 x 12.5	3600	43	Medium	19	A206138
2	97	SoundBloc	1 x 12.5	3600	45	Medium	22	A206196
3	97	SoundBloc	1 x 12.5	3600	47	Medium	22	A206228
1	102	WallBoard	1 x 15	3800	38	Medium	22	A206014
1	102	SoundBloc	1 x 15	3800	42	Heavy	26	A206165
2	102	WallBoard	1 x 15	3800	43	Medium	22	A206046
3	102	WallBoard	1 x 15	3800	44	Medium	22	A206139
2	102	SoundBloc	1 x 15	3800	47	Heavy	26	A206197
60 minutes fire resistance EN								
1	102	FireLine	1 x 15	3800	37	Heavy	24	A206078
2	102	FireLine	1 x 15	3800	43	Heavy	24	A206110
3	102	FireLine	1 x 15	3800	44	Heavy	24	A206141

[1] The maximum heights quoted are limited by the fire state field of application or by limiting deflection of L/240 at 200 Pa, whichever is the more onerous.

NB The fire resistance and sound insulation performances are for imperforate partitions, walls and ceilings incorporating boards with all joints taped and filled, or skimmed according to British Gypsum's recommendations. The quoted performances are achieved only if British Gypsum components are used throughout, and the Company's fixing recommendations are strictly observed. Any variation in the specifications should be checked with British Gypsum.

Table 2b – GypWall CLASSIC 70mm Gypframe 'C' Studs - single layer board linings
Solutions to satisfy the requirements of *BS 476: Part 22: 1987*

1

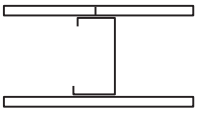

One layer of board each side of 70mm Gypframe 'C' Studs at 600mm centres. Linings as in table.

2

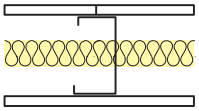

One layer of board each side of 70mm Gypframe 'C' Studs at 600mm centres. 25mm Isover APR 1200 in the cavity. Linings as in table.

3

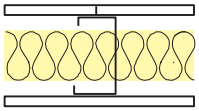

One layer of board each side of 70mm Gypframe 'C' Studs at 600mm centres. 50mm Isover APR 1200 in the cavity. Linings as in table.

For single layer Severe Duty solutions please refer to **GypWall ROBUST** and **GypWall EXTREME** sections

Detail	Partition thickness mm	Board type	Lining thickness mm	Max. partition height[1] mm	Sound insulation R_w dB	Duty rating	Approx. weight kg/m²	System reference
30 minutes fire resistance BS								
1	97	WallBoard	1 x 12.5	3600	36	Medium	18	A206013
1	97	SoundBloc	1 x 12.5	3600	40	Medium	22	A206164
2	97	WallBoard	1 x 12.5	3600	42	Medium	18	A206045
3	97	WallBoard	1 x 12.5	3600	43	Medium	19	A206138
2	97	SoundBloc	1 x 12.5	3600	45	Medium	22	A206196
3	97	SoundBloc	1 x 12.5	3600	47	Medium	22	A206228
1	102	WallBoard	1 x 15	3800	38	Medium	22	A206014
1	102	SoundBloc	1 x 15	3800	42	Heavy	26	A206165
2	102	WallBoard	1 x 15	3800	43	Medium	22	A206046
3	102	WallBoard	1 x 15	3800	44	Medium	22	A206139
2	102	SoundBloc	1 x 15	3800	47	Heavy	26	A206197
60 minutes fire resistance BS								
1	102	FireLine	1 x 15	3800	37	Heavy	24	A206078
2	102	FireLine	1 x 15	3800	43	Heavy	24	A206110
3	102	FireLine	1 x 15	3800	44	Heavy	25	A206141

[1] Based on a limiting deflection of L/240 at 200 Pa. Greater heights can be achieved through the use of Gypframe 'I' Studs, or reduced stud centres. Refer to **section 3.4.2 - Principles of robust design**.

NB The fire resistance and sound insulation performances are for imperforate partitions, walls and ceilings incorporating boards with all joints taped and filled, or skimmed according to British Gypsum's recommendations. The quoted performances are achieved only if British Gypsum components are used throughout, and the Company's fixing recommendations are strictly observed. Any variation in the specifications should be checked with British Gypsum.

Performance (▶ Refer to **section 3 - Basic principles of system design**)

EN

Table 3a – GypWall CLASSIC 70mm Gypframe 'C' Studs - double layer board linings
Solutions to satisfy the requirements of *BS EN 1364-1: 1999*

1
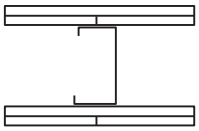

Two layers of board each side of 70mm Gypframe 'C' Studs at 600mm centres. Linings as in table.

2
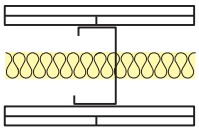

Two layers of board each side of 70mm Gypframe 'C' Studs at 600mm centres. 25mm Isover APR 1200 in the cavity. Linings as in table.

3
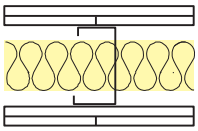

Two layers of board each side of 70mm Gypframe 'C' Studs at 600mm centres. 50mm Isover APR 1200 in the cavity. Linings as in table.

For single layer Severe Duty solutions please also refer to **GypWall ROBUST** and **GypWall EXTREME** sections

Detail	Partition thickness mm	Board type	Lining thickness mm	Max. partition height[1] mm	Sound insulation R_w dB	Duty rating	Approx. weight kg/m²	System reference
30 minutes fire resistance EN								
1	122	WallBoard	2 x 12.5	4600	45	Severe	35	A206015
2	122	WallBoard	2 x 12.5	4600	49	Severe	35	A206047
3	122	WallBoard	2 x 12.5	4600	50	Severe	35	A206142
2	122	SoundBloc	2 x 12.5	4600	52	Severe	43	A206198
3	122	SoundBloc	2 x 12.5	4600	53	Severe	44	A206230
60 minutes fire resistance EN								
1	122	SoundBloc	2 x 12.5	4600	49	Severe	43	A206166
3	122	WallBoard	2 x 12.5	4000	50	Severe	35	A206142
2	122	SoundBloc	2 x 12.5	4000	52	Severe	43	A206198
3	122	SoundBloc	2 x 12.5	4000	53	Severe	44	A206230
1	132	WallBoard	2 x 15	4900	46	Severe	42	A206016
2	132	WallBoard	2 x 15	4000	50	Severe	42	A206048
1	132	SoundBloc	2 x 15	4900	51	Severe	51	A206167
2	132	SoundBloc	2 x 15	4000	54	Severe	51	A206199
90 minutes fire resistance EN								
1	122	FireLine	2 x 12.5	4600	46	Severe	40	A206079
2	122	FireLine	2 x 12.5	4600	49	Severe	40	A206111
3	122	FireLine	2 x 12.5	4600	50	Severe	40	A206144
1	132	SoundBloc	2 x 15	3000	51	Severe	51	A206167
2	132	SoundBloc	2 x 15	4000	54	Severe	51	A206199
3	132	SoundBloc	2 x 15	4000	56	Severe	52	A206231
120 minutes fire resistance EN								
1	122	FireLine	2 x 12.5	4200	46	Severe	40	A206079
2	122	FireLine	2 x 12.5	4000	49	Severe	40	A206111
3	122	FireLine	2 x 12.5	4000	50	Severe	40	A206144
1	132	FireLine	2 x 15	4900	46	Severe	47	A206251
2	132	FireLine	2 x 15	4300	50	Severe	49	A206253

[1] The maximum heights quoted are limited by the fire state field of application or by limiting deflection of L/240 at 200 Pa, whichever is the more onerous.

NB The fire resistance and sound insulation performances are for imperforate partitions, walls and ceilings incorporating boards with all joints taped and filled, or skimmed according to British Gypsum's recommendations. The quoted performances are achieved only if British Gypsum components are used throughout, and the Company's fixing recommendations are strictly observed. Any variation in the specifications should be checked with British Gypsum.

NB For heights between 4200mm and 8000mm, Gypframe Deep Flange Floor & Ceiling Channel should be used at base and at head (subject to deflection criteria).

BS Table 3b – GypWall CLASSIC 70mm Gypframe 'C' Studs - double layer board linings
Solutions to satisfy the requirements of *BS 476: Part 22: 1987*

1

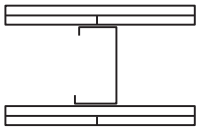

Two layers of board each side of 70mm Gypframe 'C' Studs at 600mm centres. Linings as in table.

2

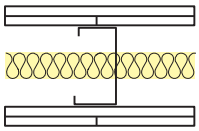

Two layers of board each side of 70mm Gypframe 'C' Studs at 600mm centres. 25mm Isover APR 1200 in the cavity. Linings as in table.

3

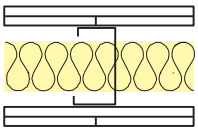

Two layers of board each side of 70mm Gypframe 'C' Studs at 600mm centres. 50mm Isover APR 1200 in the cavity. Linings as in table.

For single layer Severe Duty solutions please also refer to **GypWall ROBUST** and **GypWall EXTREME** sections

Detail	Partition thickness mm	Board type	Lining thickness mm	Max. partition height[1] mm	Sound insulation R_w dB	Duty rating	Approx. weight kg/m²	System reference
60 minutes fire resistance BS								
1	122	WallBoard	2 x 12.5	4600	45	Severe	35	A206015
1	122	SoundBloc	2 x 12.5	4600	49	Severe	43	A206166
2	122	WallBoard	2 x 12.5	4600	49	Severe	35	A206047
3	122	WallBoard	2 x 12.5	4600	50	Severe	36	A206142
2	122	SoundBloc	2 x 12.5	4600	52	Severe	43	A206198
3	122	SoundBloc	2 x 12.5	4600	53	Severe	44	A206230
90 minutes fire resistance BS								
1	132	WallBoard	2 x 15	4900	46	Severe	42	A206016
2	132	WallBoard	2 x 15	4900	50	Severe	42	A206048
1	132	SoundBloc	2 x 15	4900	51	Severe	51	A206167
2	132	SoundBloc	2 x 15	4900	54	Severe	51	A206199
3	132	SoundBloc	2 x 15	4900	56	Severe	52	A206231
120 minutes fire resistance BS								
1	112	Glasroc F MULTIBOARD	2 x 10	4200	42	Severe	40	G106013
1	122	FireLine	2 x 12.5	4600	46	Severe	40	A206079
2	122	FireLine	2 x 12.5	4600	49	Severe	40	A206111
3	122	FireLine	2 x 12.5	4600	50	Severe	41	A206144

[1] Based on a limiting deflection of L/240 at 200 Pa. Greater heights can be achieved through the use of Gypframe 'I' Studs, or reduced stud centres. Refer to **section 3.4.2 - Principles of robust design**.

NB The fire resistance and sound insulation performances are for imperforate partitions, walls and ceilings incorporating boards with all joints taped and filled, or skimmed according to British Gypsum's recommendations. The quoted performances are achieved only if British Gypsum components are used throughout, and the Company's fixing recommendations are strictly observed. Any variation in the specifications should be checked with British Gypsum.

NB For heights between 4200mm and 8000mm, Gypframe Deep Flange Floor & Ceiling Channel should be used at base and at head (subject to deflection criteria).

Performance (▶ Refer to **section 3 - Basic principles of system design**)

EN

Table 4a – GypWall CLASSIC 70mm Gypframe AcouStuds - single and double layer board linings
Solutions to satisfy the requirements of *BS EN 1364-1: 1999*

1
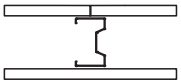
One layer of board each side of 70mm Gypframe 70 AS 50 AcouStuds at 600mm centres. Linings as in table.

2
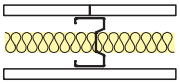
One layer of board each side of 70mm Gypframe 70 AS 50 AcouStuds at 600mm centres. 25mm Isover APR 1200 in the cavity. Linings as in table.

3
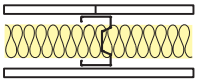
One layer of board each side of 70mm Gypframe 70 AS 50 AcouStuds at 600mm centres. 50mm Isover APR 1200 in the cavity. Linings as in table.

4
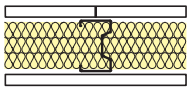
One layer of board each side of 70mm Gypframe 70 AS 50 AcouStuds at 600mm centres. 3 x 25mm Isover APR 1200 in the cavity. Linings as in table.

5
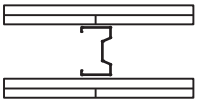
Two layers of board each side of 70mm Gypframe 70 AS 50 AcouStuds at 600mm centres. Linings as in table.

6
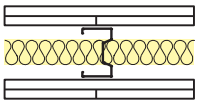
Two layers of board each side of 70mm Gypframe 70 AS 50 AcouStuds at 600mm centres. 25mm Isover APR 1200 in the cavity. Linings as in table.

For single layer Severe Duty solutions please also refer to **GypWall ROBUST** and **GypWall EXTREME** sections

Detail	Partition thickness mm	Board type	Lining thickness mm	Max. partition height[1] mm	Sound insulation R_w dB	Duty rating	Approx. weight kg/m²	System reference
30 minutes fire resistance EN								
1	97	WallBoard	1 x 12.5	3800	37	Medium	18	A206A013
1	97	SoundBloc	1 x 12.5	3800	41	Medium	22	A206A164
3	97	WallBoard	1 x 12.5	3800	44	Medium	19	A206A138
2	97	SoundBloc	1 x 12.5	3800	48	Medium	22	A206A196
3	97	SoundBloc	1 x 12.5	3800	49	Medium	23	A206A228
1	102	WallBoard	1 x 15	4000	39	Medium	22	A206A014
3	102	WallBoard	1 x 15	4000	44	Medium	22	A206A139
4	102	SoundBloc	1 x 15	4000	50	Heavy	26	A206A252
5	122	WallBoard	2 x 12.5	4700	47	Severe	35	A206A015
60 minutes fire resistance EN								
1	102	FireLine	1 x 15	4000	39	Heavy	24	A206A078
2	102	FireLine	1 x 15	4000	43	Heavy	24	A206A110
3	102	FireLine	1 x 15	4000	44	Heavy	24	A206A141
5	122	SoundBloc	2 x 12.5	4700	53	Severe	43	A206A166
6	122	SoundBloc	2 x 12.5	4000	58	Severe	43	A206A198
90 minutes fire resistance EN								
5	122	FireLine	2 x 12.5	4700	49	Severe	40	A206A079
6	122	FireLine	2 x 12.5	4700	54	Severe	40	A206A111
5	132	SoundBloc	2 x 15	3000	54	Severe	51	A206A167
120 minutes fire resistance EN								
5	122	FireLine	2 x 12.5	4200	49	Severe	40	A206A079
6	122	FireLine	2 x 12.5	4000	54	Severe	40	A206A111
5	132	FireLine	2 x 15	5000	49	Severe	49	A206A251

[1] The maximum heights quoted are limited by the fire state field of application or by limiting deflection of L/240 at 200 Pa, whichever is the more onerous.

NB The fire resistance and sound insulation performances are for imperforate partitions, walls and ceilings incorporating boards with all joints taped and filled, or skimmed according to British Gypsum's recommendations. The quoted performances are achieved only if British Gypsum components are used throughout, and the Company's fixing recommendations are strictly observed. Any variation in the specifications should be checked with British Gypsum.

NB For heights between 4200mm and 8000mm, Gypframe Deep Flange Floor & Ceiling Channel should be used at base and at head (subject to deflection criteria).

BS Table 4b – GypWall CLASSIC 70mm Gypframe AcouStuds - single and double layer board linings
Solutions to satisfy the requirements of *BS 476: Part 22: 1987*

1
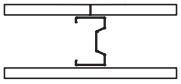

One layer of board each side of 70mm Gypframe 70 AS 50 AcouStuds at 600mm centres. Linings as in table.

2
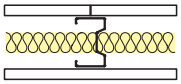

One layer of board each side of 70mm Gypframe 70 AS 50 AcouStuds at 600mm centres. 25mm Isover APR 1200 in the cavity. Linings as in table.

3
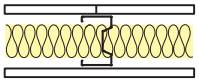

One layer of board each side of 70mm Gypframe 70 AS 50 AcouStuds at 600mm centres. 50mm Isover APR 1200 in the cavity. Linings as in table.

4
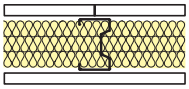

One layer of board each side of 70mm Gypframe 70 AS 50 AcouStuds at 600mm centres. 3 x 25mm Isover APR 1200 in the cavity. Linings as in table.

5
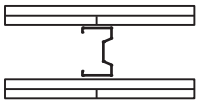

Two layers of board each side of 70mm Gypframe 70 AS 50 AcouStuds at 600mm centres. Linings as in table.

6
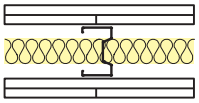

Two layers of board each side of 70mm Gypframe 70 AS 50 AcouStuds at 600mm centres. 25mm Isover APR 1200 in the cavity. Linings as in table.

For single layer Severe Duty solutions please also refer to **GypWall ROBUST** and **GypWall EXTREME** sections

Detail	Partition thickness mm	Board type	Lining thickness mm	Max. partition height[1] mm	Sound insulation R_w dB	Duty rating	Approx. weight kg/m²	System reference
30 minutes fire resistance BS								
1	97	WallBoard	1 x 12.5	3800	37	Medium	18	A206A013
1	97	SoundBloc	1 x 12.5	3800	41	Medium	22	A206A164
3	97	WallBoard	1 x 12.5	3800	44	Medium	19	A206A138
2	97	SoundBloc	1 x 12.5	3800	48	Medium	22	A206A196
3	97	SoundBloc	1 x 12.5	3800	49	Medium	23	A206A228
4	102	SoundBloc	1 x 15	4000	50	Heavy	26	A206A252
60 minutes fire resistance BS								
1	102	FireLine	1 x 15	4000	39	Heavy	24	A206A078
2	102	FireLine	1 x 15	4000	43	Heavy	24	A206A110
3	102	FireLine	1 x 15	4000	44	Heavy	24	A206A141
5	122	WallBoard	2 x 12.5	4700	47	Severe	35	A206A015
5	122	SoundBloc	2 x 12.5	4700	53	Severe	43	A206A166
6	122	SoundBloc	2 x 12.5	4700	58	Severe	43	A206A198
90 minutes fire resistance BS								
5	132	SoundBloc	2 x 15	5000	54	Severe	51	A206A167
120 minutes fire resistance BS								
5	122	FireLine	2 x 12.5	4700	49	Severe	40	A206A079
6	122	FireLine	2 x 12.5	4700	54	Severe	40	A206A111

[1] Based on a limiting deflection of L/240 at 200 Pa. Greater heights can be achieved through the use of Gypframe 'I' Studs, or reduced stud centres. Refer to **section 3.4.2 - Principles of robust design**.

NB The fire resistance and sound insulation performances are for imperforate partitions, walls and ceilings incorporating boards with all joints taped and filled, or skimmed according to British Gypsum's recommendations. The quoted performances are achieved only if British Gypsum components are used throughout, and the Company's fixing recommendations are strictly observed. Any variation in the specifications should be checked with British Gypsum.

NB For heights between 4200mm and 8000mm, Gypframe Deep Flange Floor & Ceiling Channel should be used at base and at head (subject to deflection criteria).

Performance (▶ Refer to **section 3 - Basic principles of system design**)

EN

Table 5a – GypWall CLASSIC 92mm Gypframe 'C' Studs - single and double layer board linings
Solutions to satisfy the requirements of *BS EN 1364-1: 1999*

SPECSURE LIFETIME SYSTEM WARRANTY

1
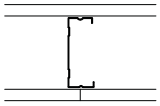
One layer of board each side of 92mm Gypframe 'C' Studs at 600mm centres. Linings as in table.

2
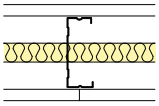
One layer of board each side of 92mm Gypframe 'C' Studs at 600mm centres. 25mm Isover APR 1200 in the cavity. Linings as in table.

3
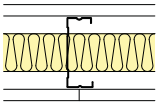
One layer of board each side of 92mm Gypframe 'C' Studs at 600mm centres. 50mm Isover APR 1200 in the cavity. Linings as in table.

4
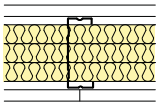
One layer of board each side of 92mm Gypframe 'C' Studs at 600mm centres. 3 x 25mm Isover APR 1200 in the cavity. Linings as in table.

5
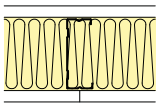
One layer of board each side of 92mm Gypframe 'C' Studs at 600mm centres. 100mm Isover Modular Roll in the cavity. Linings as in table.

6
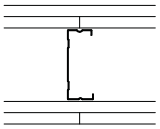
Two layers of board each side of 92mm Gypframe 'C' Studs at 600mm centres. Linings as in table.

7
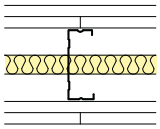
Two layers of board each side of 92mm Gypframe 'C' Studs at 600mm centres. 25mm Isover APR 1200 in the cavity. Linings as in table.

8
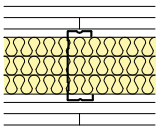
Two layers of board each side of 92mm Gypframe 'C' Studs at 600mm centres. 3 x 25mm Isover APR 1200 in the cavity. Linings as in table.

9
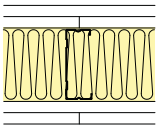
Two layers of board each side of 92mm Gypframe 'C' Studs at 600mm centres. 100mm Isover Modular Roll in the cavity. Linings as in table.

For single layer Severe Duty solutions please also refer to **GypWall ROBUST** and **GypWall EXTREME** sections

Detail	Partition thickness mm	Board type	Lining thickness mm	Max. partition height[1] mm	Sound insulation R_w (R_w + Ctr) dB	Duty rating	Approx. weight kg/m²	System reference
30 minutes fire resistance EN								
1	124	SoundBloc	1 x 15	4000	44	Heavy	27	A206261
2	124	SoundBloc	1 x 15	4000	49	Heavy	27	A206262
4	119	SoundBloc	1 x 12.5	4000	50	Medium	23	A206232
3	124	SoundBloc	1 x 15	4000	50	Heavy	27	A206263
5	124	SoundBloc	1 x 15	4000	51	Heavy	27	A206264
4	124	SoundBloc	1 x 15	4000	52	Heavy	27	A206233
60 minutes fire resistance EN								
1	124	FireLine	1 x 15	4000	40	Heavy	25	A206265
2	124	FireLine	1 x 15	4000	44[2]	Heavy	25	A206266
5	124	FireLine	1 x 15	4000	46	Heavy	25	A206268
8	144	SoundBloc	2 x 12.5	4000	56 (51)	Severe	44	A206234
90 minutes fire resistance EN								
6	154	SoundBloc	2 x 15	5000	52	Severe	52	A206269
9	154	FireLine	2 x 15	4000	53	Severe	53	A206276
7	154	SoundBloc	2 x 15	5000	56[2]	Severe	52	A206270
120 minutes fire resistance EN								
6	154	FireLine	2 x 15	5900	50	Severe	52	A206273
7	154	FireLine	2 x 15	5000	52[2]	Severe	52	A206274
9	154	FireLine	2 x 15	3000	53	Severe	53	A206276

[1] The maximum heights quoted are limited by the fire state field of application or by limiting deflection of L/240 at 200 Pa, whichever is the more onerous.
[2] Increasing insulation to 50mm Isover APR 1200 will not improve this system performance.

NB The fire resistance and sound insulation performances are for imperforate partitions, walls and ceilings incorporating boards with all joints taped and filled, or skimmed according to British Gypsum's recommendations. The quoted performances are achieved only if British Gypsum components are used throughout, and the Company's fixing recommendations are strictly observed. Any variation in the specifications should be checked with British Gypsum.

NB For heights between 4200mm and 8000mm, Gypframe Deep Flange Floor & Ceiling Channel should be used at base and at head (subject to deflection criteria).

NBS work section K10 - Plasterboard drylinings / partitions / ceilings

BS Table 5b – GypWall CLASSIC 92mm Gypframe 'C' Studs - single and double layer board linings
Solutions to satisfy the requirements of *BS 476: Part 22: 1987*

1
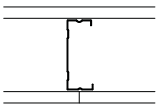
One layer of board each side of 92mm Gypframe 'C' Studs at 600mm centres. Linings as in table.

2
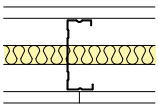
One layer of board each side of 92mm Gypframe 'C' Studs at 600mm centres. 25mm Isover APR 1200 in the cavity. Linings as in table.

3
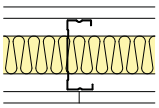
One layer of board each side of 92mm Gypframe 'C' Studs at 600mm centres. 50mm Isover APR 1200 in the cavity. Linings as in table.

4
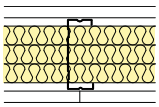
One layer of board each side of 92mm Gypframe 'C' Studs at 600mm centres. 3 x 25mm Isover APR 1200 in the cavity. Linings as in table.

5
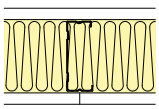
One layer of board each side of 92mm Gypframe 'C' Studs at 600mm centres. 100mm Isover Modular Roll in the cavity. Linings as in table.

6
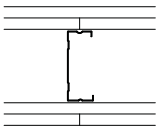
Two layers of board each side of 92mm Gypframe 'C' Studs at 600mm centres. Linings as in table.

7
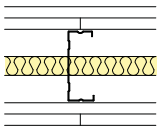
Two layers of board each side of 92mm Gypframe 'C' Studs at 600mm centres. 25mm Isover APR 1200 in the cavity. Linings as in table.

8
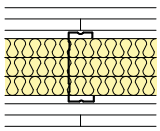
Two layers of board each side of 92mm Gypframe 'C' Studs at 600mm centres. 3 x 25mm Isover APR 1200 in the cavity. Linings as in table.

9
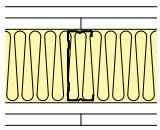
Two layers of board each side of 92mm Gypframe 'C' Studs at 600mm centres. 100mm Isover Modular Roll in the cavity. Linings as in table.

For single layer Severe Duty solutions please also refer to **GypWall ROBUST** and **GypWall EXTREME** sections

Detail	Partition thickness mm	Board type	Lining thickness mm	Max. partition height[1] mm	Sound insulation R_w (R_w + Ctr) dB	Duty rating	Approx. weight kg/m²	System reference
30 minutes fire resistance BS								
1	124	SoundBloc	1 x 15	4700	44	Heavy	27	A206261
2	124	SoundBloc	1 x 15	4700	49	Heavy	27	A206262
4	119	SoundBloc	1 x 12.5	4500	50	Medium	23	A206232
3	124	SoundBloc	1 x 15	4700	50	Heavy	27	A206263
5	124	SoundBloc	1 x 15	4700	51	Heavy	27	A206264
4	124	SoundBloc	1 x 15	4700	52	Heavy	27	A206233
60 minutes fire resistance BS								
1	124	FireLine	1 x 15	4700	40	Heavy	25	A206265
2	124	FireLine	1 x 15	4700	44[2]	Heavy	25	A206266
5	124	FireLine	1 x 15	4700	46	Heavy	25	A206268
8	144	SoundBloc	2 x 12.5	5700	56 (51)	Severe	44	A206234
90 minutes fire resistance BS								
6	154	SoundBloc	2 x 15	5900	52	Severe	52	A206269
7	154	SoundBloc	2 x 15	5900	56[2]	Severe	52	A206270
120 minutes fire resistance BS								
6	154	FireLine	2 x 15	5900	50	Severe	52	A206273
7	154	FireLine	2 x 15	5900	52[2]	Severe	52	A206274
9	154	FireLine	2 x 15	5900	53	Severe	53	A206276

[1] Based on a limiting deflection of L/240 at 200 Pa. Greater heights can be achieved through the use of Gypframe 'I' Studs, or reduced stud centres. Refer to **section 3.4.2 - Principles of robust design**.

[2] Increasing insulation to 50mm Isover APR 1200 will not improve this system performance.

NB The fire resistance and sound insulation performances are for imperforate partitions, walls and ceilings incorporating boards with all joints taped and filled, or skimmed according to British Gypsum's recommendations. The quoted performances are achieved only if British Gypsum components are used throughout, and the Company's fixing recommendations are strictly observed. Any variation in the specifications should be checked with British Gypsum.

NB For heights between 4200mm and 8000mm, Gypframe Deep Flange Floor & Ceiling Channel should be used at base and at head (subject to deflection criteria).

NBS work section K10 - Plasterboard drylinings / partitions / ceilings

Performance (▶ Refer to **section 3 - Basic principles of system design**)

EN

Table 6a – GypWall CLASSIC 92mm Gypframe AcouStuds - single and double layer board linings
Solutions to satisfy the requirements of *BS EN 1364-1: 1999*

1
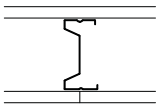
One layer of board each side of 92mm Gypframe AcouStuds at 600mm centres. Linings as in table.

2
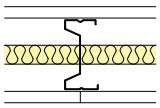
One layer of board each side of 92mm Gypframe AcouStuds at 600mm centres. 25mm Isover APR 1200 in the cavity. Linings as in table.

3
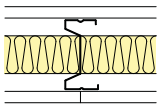
One layer of board each side of 92mm Gypframe AcouStuds at 600mm centres. 50mm Isover APR 1200 in the cavity. Linings as in table.

4
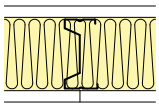
One layer of board each side of 92mm Gypframe AcouStuds at 600mm centres. 100mm Isover Modular Roll in the cavity. Linings as in table.

5
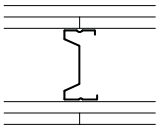
Two layers of board each side of 92mm Gypframe AcouStuds at 600mm centres. Linings as in table.

6
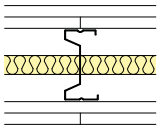
Two layers of board each side of 92mm Gypframe AcouStuds at 600mm centres. 25mm Isover APR 1200 in the cavity. Linings as in table.

7
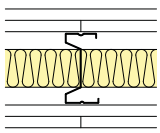
Two layers of board each side of 92mm Gypframe AcouStuds at 600mm centres. 50mm Isover APR 1200 in the cavity. Linings as in table.

8
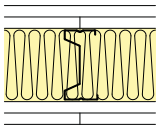
Two layers of board each side of 92mm Gypframe AcouStuds at 600mm centres. 100mm Isover Modular Roll in the cavity. Linings as in table.

For single layer Severe Duty solutions please also refer to **GypWall ROBUST** and **GypWall EXTREME** sections

Detail	Partition thickness mm	Board type	Lining thickness mm	Max. partition height[1] mm	Sound insulation R_w (R_w + Ctr) dB	Duty rating	Approx. weight kg/m²	System reference
30 minutes fire resistance EN								
1	124	SoundBloc	1 x 15	4000	45	Heavy	27	A206A281
2	124	SoundBloc	1 x 15	4000	50	Heavy	27	A206A282
3	124	SoundBloc	1 x 15	4000	51	Heavy	27	A206A283
4	124	SoundBloc	1 x 15	4000	52	Heavy	27	A206A284
60 minutes fire resistance EN								
1	124	FireLine	1 x 15	4000	41	Heavy	24	A206A285
2	124	FireLine	1 x 15	4000	44[2]	Heavy	24	A206A286
4	124	FireLine	1 x 15	4000	46	Heavy	24	A206A288
5	144	SoundBloc	2 x 12.5	5000	54	Severe	52	A206A289
6	144	SoundBloc	2 x 12.5	5000	57 (51)	Severe	52	A206A290
7	144	SoundBloc	2 x 12.5	5000	58 (53)	Severe	52	A206A291
8	144	SoundBloc	2 x 12.5	5000	59 (54)	Severe	52	A206A292
120 minutes fire resistance EN								
5	144	FireLine	2 x 12.5	3000	51	Severe	52	A206A293
6	144	FireLine	2 x 12.5	4000	54	Severe	52	A206A294
7	144	FireLine	2 x 12.5	4000	55	Severe	52	A206A295
8	144	FireLine	2 x 12.5	3000	56	Severe	52	A206A296

[1] The maximum heights quoted are limited by the fire state field of application or by limiting deflection of L/240 at 200 Pa, whichever is the more onerous.
[2] Increasing insulation to 50mm Isover APR 1200 will not improve this system performance.

NB The fire resistance and sound insulation performances are for imperforate partitions, walls and ceilings incorporating boards with all joints taped and filled, or skimmed according to British Gypsum's recommendations. The quoted performances are achieved only if British Gypsum components are used throughout, and the Company's fixing recommendations are strictly observed. Any variation in the specifications should be checked with British Gypsum.

NB For heights between 4200mm and 8000mm, Gypframe Deep Flange Floor & Ceiling Channel should be used at base and at head (subject to deflection criteria).

BS Table 6b – GypWall CLASSIC 92mm Gypframe AcouStuds - single and double layer board linings
Solutions to satisfy the requirements of *BS 476: Part 22: 1987*

1
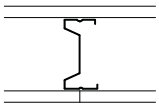
One layer of board each side of 92mm Gypframe AcouStuds at 600mm centres. Linings as in table.

2
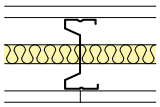
One layer of board each side of 92mm Gypframe AcouStuds at 600mm centres. 25mm Isover APR 1200 in the cavity. Linings as in table.

3
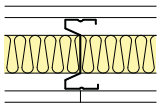
One layer of board each side of 92mm Gypframe AcouStuds at 600mm centres. 50mm Isover APR 1200 in the cavity. Linings as in table.

4
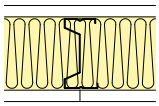
One layer of board each side of 92mm Gypframe AcouStuds at 600mm centres. 100mm Isover Modular Roll in the cavity. Linings as in table.

5
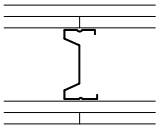
Two layers of board each side of 92mm Gypframe AcouStuds at 600mm centres. Linings as in table.

6
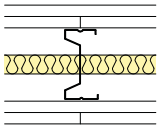
Two layers of board each side of 92mm Gypframe AcouStuds at 600mm centres. 25mm Isover APR 1200 in the cavity. Linings as in table.

7
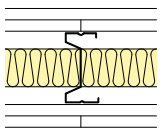
Two layers of board each side of 92mm Gypframe AcouStuds at 600mm centres. 50mm Isover APR 1200 in the cavity. Linings as in table.

8
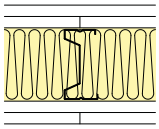
Two layers of board each side of 92mm Gypframe AcouStuds at 600mm centres. 100mm Isover Modular Roll in the cavity. Linings as in table.

For single layer Severe Duty solutions please also refer to **GypWall ROBUST** and **GypWall EXTREME** sections

Detail	Partition thickness mm	Board type	Lining thickness mm	Max. partition height[1] mm	Sound insulation R_w (R_w + Ctr) dB	Duty rating	Approx. weight kg/m²	System reference
30 minutes fire resistance BS								
1	124	SoundBloc	1 x 15	4900	45	Heavy	27	A206A281
2	124	SoundBloc	1 x 15	4900	50	Heavy	27	A206A282
3	124	SoundBloc	1 x 15	4900	51	Heavy	27	A206A283
4	124	SoundBloc	1 x 15	4900	52	Heavy	27	A206A284
60 minutes fire resistance BS								
1	124	FireLine	1 x 15	4900	41	Heavy	24	A206A285
2	124	FireLine	1 x 15	4900	44[2]	Heavy	24	A206A286
4	124	FireLine	1 x 15	4900	46	Heavy	24	A206A288
5	144	SoundBloc	2 x 12.5	5800	54	Severe	52	A206A289
6	144	SoundBloc	2 x 12.5	5800	57 (51)	Severe	52	A206A290
7	144	SoundBloc	2 x 12.5	5800	58 (53)	Severe	52	A206A291
8	144	SoundBloc	2 x 12.5	5800	59 (54)	Severe	52	A206A292
120 minutes fire resistance BS								
5	144	FireLine	2 x 12.5	5800	51	Severe	52	A206A293
6	144	FireLine	2 x 12.5	5800	54	Severe	52	A206A294
7	144	FireLine	2 x 12.5	5800	55	Severe	52	A206A295
8	144	FireLine	2 x 12.5	5800	56	Severe	52	A206A296

[1] Based on a limiting deflection of L/240 at 200 Pa. Greater heights can be achieved through the use of Gypframe 'I' Studs, or reduced stud centres. Refer to **section 3.4.2 - Principles of robust design**.
[2] Increasing insulation to 50mm Isover APR 1200 will not improve this system performance.

NB The fire resistance and sound insulation performances are for imperforate partitions, walls and ceilings incorporating boards with all joints taped and filled, or skimmed according to British Gypsum's recommendations. The quoted performances are achieved only if British Gypsum components are used throughout, and the Company's fixing recommendations are strictly observed. Any variation in the specifications should be checked with British Gypsum.

NB For heights between 4200mm and 8000mm, Gypframe Deep Flange Floor & Ceiling Channel should be used at base and at head (subject to deflection criteria).

Performance (▶ Refer to **section 3 - Basic principles of system design**)

EN

Table 7a – GypWall CLASSIC 146mm Gypframe 'C' Studs - double layer board linings
Solutions to satisfy the requirements of *BS EN 1364-1: 1999*

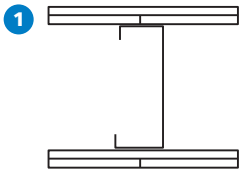

Two layers of board each side of 146mm Gypframe 'C' Studs at 600mm centres. Linings as in table.

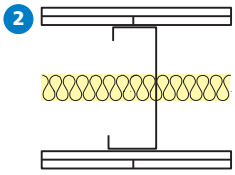

Two layers of board each side of 146mm Gypframe 'C' Studs at 600mm centres. 25mm Isover APR 1200 in the cavity. Linings as in table.

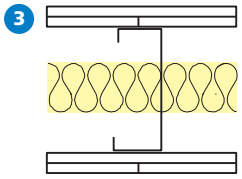

Two layers of board each side of 146mm Gypframe 'C' Studs at 600mm centres. 50mm Isover APR 1200 in the cavity. Linings as in table.

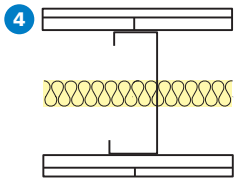

Inner layer of Gyproc Plank fixed horizontally, and outer layer of Gyproc FireLine fixed vertically each side of 146mm Gypframe 'C' Studs at 600mm centres. 25mm Isover APR 1200 in the cavity. Linings as in table.

For single layer Severe Duty solutions please also refer to **GypWall ROBUST** and **GypWall EXTREME** sections

Detail	Partition thickness mm	Board type	Lining thickness mm	Max. partition height[1] mm	Sound insulation R_w (R_w + Ctr) dB	Duty rating	Approx. weight kg/m²	System reference
30 minutes fire resistance EN								
1	198	WallBoard	2 x 12.5	7600	50	Severe	35	A206027
2	198	WallBoard	2 x 12.5	7600	51	Severe	35	A206059
3	198	WallBoard	2 x 12.5	7600	51	Severe	36	A206149
1	198	SoundBloc	2 x 12.5	7600	53	Severe	43	A206178
2	198	SoundBloc	2 x 12.5	7600	55 (49)	Severe	43	A206210
60 minutes fire resistance EN								
3	198	WallBoard	2 x 12.5	4000	51	Severe	36	A206149
1	198	SoundBloc	2 x 12.5	5000	53	Severe	43	A206178
2	198	SoundBloc	2 x 12.5	4000	55 (49)	Severe	43	A206210
1	208	WallBoard	2 x 15	5000	50	Severe	42	A206028
2	208	WallBoard	2 x 15	4000	51	Severe	42	A206060
3	208	WallBoard	2 x 15	4000	51	Severe	43	A206150
1	208	SoundBloc	2 x 15	5000	56 (50)	Severe	51	A206179
4	211	Plank + FireLine	19 + 12.5	7100	51	Severe	54	A226002
90 minutes fire resistance EN								
1	198	FireLine	2 x 12.5	7600	50	Severe	40	A206091
2	198	FireLine	2 x 12.5	7600	51	Severe	40	A206123
3	198	FireLine	2 x 12.5	7600	51	Severe	40	A206151
1	208	SoundBloc	2 x 15	3000	56 (50)	Severe	51	A206179
2	208	SoundBloc	2 x 15	4000	58 (52)	Severe	51	A206211
3	208	SoundBloc	2 x 15	4000	59 (53)	Severe	52	A206243
4	211	Plank + FireLine	19 + 12.5	4000	51	Severe	54	A226002
120 minutes fire resistance EN								
1	198	FireLine	2 x 12.5	4200	50	Severe	40	A206091
3	198	FireLine	2 x 12.5	4000	51	Severe	40	A206151
2	198	FireLine	2 x 12.5	4000	51	Severe	40	A206123
1	208	FireLine	2 x 15	7900	50	Severe	46	A206180
2	208	FireLine	2 x 15	7800	51	Severe	46	A206181
3	208	FireLine	2 x 15	7800	51	Severe	46	A206254

[1] The maximum heights quoted are limited by the fire state field of application or by limiting deflection of L/240 at 200 Pa, whichever is the more onerous.

NB The fire resistance and sound insulation performances are for imperforate partitions, walls and ceilings incorporating boards with all joints taped and filled, or skimmed according to British Gypsum's recommendations. The quoted performances are achieved only if British Gypsum components are used throughout, and the Company's fixing recommendations are strictly observed. Any variation in the specifications should be checked with British Gypsum.

NB For heights between 4200mm and 8000mm, Gypframe Deep Flange Floor & Ceiling Channel should be used at base and at head (subject to deflection criteria).

Table 7b – GypWall CLASSIC 146mm Gypframe 'C' Studs - double layer board linings
Solutions to satisfy the requirements of *BS 476: Part 22: 1987*

1
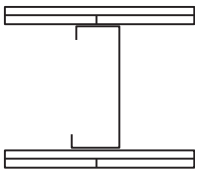

Two layers of board each side of 146mm Gypframe 'C' Studs at 600mm centres. Linings as in table.

2
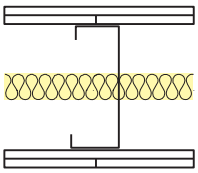

Two layers of board each side of 146mm Gypframe 'C' Studs at 600mm centres. 25mm Isover APR 1200 in the cavity. Linings as in table.

3
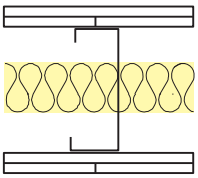

Two layers of board each side of 146mm Gypframe 'C' Studs at 600mm centres. 50mm Isover APR 1200 in the cavity. Linings as in table.

4
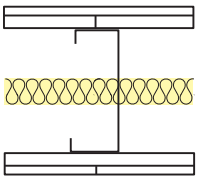

Inner layer of Gyproc Plank fixed horizontally, and outer layer of Gyproc board fixed vertically each side of 146mm Gypframe 'C' Studs at 600mm centres. 25mm Isover APR 1200 in the cavity. Linings as in table.

For single layer Severe Duty solutions please also refer to **GypWall ROBUST** and **GypWall EXTREME** sections

Detail	Partition thickness mm	Board type	Lining thickness mm	Max. partition height[1] mm	Sound insulation R_w (R_w + Ctr) dB	Duty rating	Approx. weight kg/m²	System reference
60 minutes fire resistance BS								
1	198	WallBoard	2 x 12.5	7600	50	Severe	35	A206027
3	198	WallBoard	2 x 12.5	7600	51	Severe	36	A206149
2	198	WallBoard	2 x 12.5	7600	51	Severe	35	A206059
1	198	SoundBloc	2 x 12.5	7600	53	Severe	43	A206178
2	198	SoundBloc	2 x 12.5	7600	55 (49)	Severe	43	A206210
3	198	SoundBloc	2 x 12.5	7600	56 (50)	Severe	43	A206244
90 minutes fire resistance BS								
1	208	WallBoard	2 x 15	7900	50	Severe	42	A206028
2	208	WallBoard	2 x 15	7900	51	Severe	42	A206060
1	208	SoundBloc	2 x 15	7900	56 (50)	Severe	51	A206179
2	208	SoundBloc	2 x 15	7900	58 (52)	Severe	51	A206211
3	208	SoundBloc	2 x 15	7900	59 (53)	Severe	52	A206243
4	211	Plank + SoundBloc	19 + 12.5	7100	59	Severe	54	A226001
120 minutes fire resistance BS								
1	188	Glasroc F MULTIBOARD	2 x 10	7100	48	Severe	40	G106014
1	198	FireLine	2 x 12.5	7600	50	Severe	40	A206091
2	198	FireLine	2 x 12.5	7600	51	Severe	40	A206123
3	198	FireLine	2 x 12.5	7600	51	Severe	41	A206151
4	211	Plank + FireLine	19 + 12.5	7100	51	Severe	54	A226002

[1] Based on a limiting deflection of L/240 at 200 Pa. Greater heights can be achieved through the use of Gypframe 'I' Studs, or reduced stud centres. Refer to **section 3.4.2 - Principles of robust design**.

NB The fire resistance and sound insulation performances are for imperforate partitions, walls and ceilings incorporating boards with all joints taped and filled, or skimmed according to British Gypsum's recommendations. The quoted performances are achieved only if British Gypsum components are used throughout, and the Company's fixing recommendations are strictly observed. Any variation in the specifications should be checked with British Gypsum.

NB For heights between 4200mm and 8000mm, Gypframe Deep Flange Floor & Ceiling Channel should be used at base and at head (subject to deflection criteria).

Performance (▶ Refer to **section 3 - Basic principles of system design**)

EN

Table 8a – GypWall CLASSIC 146mm Gypframe AcouStuds - double layer board linings
Solutions to satisfy the requirements of *BS EN 1364-1: 1999*

1

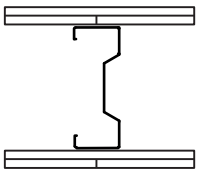

Two layers of board each side of 146mm Gypframe 146 AS 50 AcouStuds at 600mm centres. Linings as in table.

2

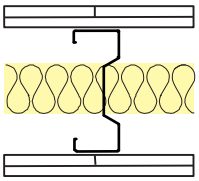

Two layers of board each side of 146mm Gypframe 146 AS 50 AcouStuds at 600mm centres. 50mm Isover APR 1200 in the cavity. Linings as in table.

3

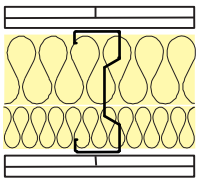

Two layers of board each side of 146mm Gypframe 146 AS 50 AcouStuds at 600mm centres. 150mm Isover APR 1200 (100mm and 50mm) in the cavity. Linings as in table.

For single layer Severe Duty solutions please also refer to **GypWall ROBUST** and **GypWall EXTREME** sections

Detail	Partition thickness mm	Board type	Lining thickness mm	Max. partition height[1] mm	Sound insulation R_w (R_w + Ctr) dB	Duty rating	Approx. weight kg/m²	System reference
60 minutes fire resistance EN								
1	208	WallBoard	2 x 15	5000	52 (47)	Severe	42	A206A028
1	208	SoundBloc	2 x 15	5000	59 (54)	Severe	51	A206A179
3	208	SoundBloc	2 x 15	5000	61 (57)	Severe	53	A206A255
90 minutes fire resistance EN								
1	198	FireLine	2 x 12.5	7800	52 (48)	Severe	40	A206A091
1	208	SoundBloc	2 x 15	4000	59 (54)	Severe	51	A206A179
2	208	SoundBloc	2 x 15	4000	61 (56)	Severe	52	A206A243
3	208	SoundBloc	2 x 15	4000	61 (57)	Severe	53	A206A255
120 minutes fire resistance EN								
1	198	FireLine	2 x 12.5	4200	52 (48)	Severe	40	A206A091
1	208	FireLine	2 x 15	8100	52 (47)	Severe	50	A206A180

[1] The maximum heights quoted are limited by the fire state field of application or by limiting deflection of L/240 at 200 Pa, whichever is the more onerous.

NB The fire resistance and sound insulation performances are for imperforate partitions, walls and ceilings incorporating boards with all joints taped and filled, or skimmed according to British Gypsum's recommendations. The quoted performances are achieved only if British Gypsum components are used throughout, and the Company's fixing recommendations are strictly observed. Any variation in the specifications should be checked with British Gypsum.

NB For heights between 4200mm and 8000mm, Gypframe Deep Flange Floor & Ceiling Channel should be used at base and at head (subject to deflection criteria).

NB For heights over 8000mm, Gypframe Extra Deep Flange Floor & Ceiling Channel should be used at head and base.

Table 8b – GypWall CLASSIC 146mm Gypframe AcouStuds - double layer board linings
Solutions to satisfy the requirements of *BS 476: Part 22: 1987*

1

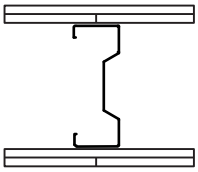

Two layers of board each side of 146mm Gypframe 146 AS 50 AcouStuds at 600mm centres. Linings as in table.

2

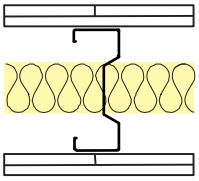

Two layers of board each side of 146mm Gypframe 146 AS 50 AcouStuds at 600mm centres. 50mm Isover APR 1200 in the cavity. Linings as in table.

3

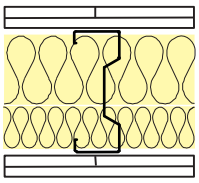

Two layers of board each side of 146mm Gypframe 146 AS 50 AcouStuds at 600mm centres. 150mm Isover APR 1200 (100mm and 50mm) in the cavity. Linings as in table.

For single layer Severe Duty solutions please also refer to **GypWall ROBUST** and **GypWall EXTREME** sections

Detail	Partition thickness mm	Board type	Lining thickness mm	Max. partition height[1] mm	Sound insulation R_w (R_w + Ctr) dB	Duty rating	Approx. weight kg/m²	System reference
90 minutes fire resistance BS								
1	208	WallBoard	2 x 15	8100	52 (47)	Severe	42	A206A028
1	208	SoundBloc	2 x 15	8100	59 (54)	Severe	51	A206A179
2	208	SoundBloc	2 x 15	8100	61 (56)	Severe	52	A206A243
3	208	SoundBloc	2 x 15	8100	61 (57)	Severe	53	A206A255
120 minutes fire resistance BS								
1	198	FireLine	2 x 12.5	7800	52 (48)	Severe	40	A206A091

[1] Based on a limiting deflection of L/240 at 200 Pa. Greater heights can be achieved through the use of Gypframe 'I' Studs, or reduced stud centres. Refer to **section 3.4.2 - Principles of robust design**.

NB The fire resistance and sound insulation performances are for imperforate partitions, walls and ceilings incorporating boards with all joints taped and filled, or skimmed according to British Gypsum's recommendations. The quoted performances are achieved only if British Gypsum components are used throughout, and the Company's fixing recommendations are strictly observed. Any variation in the specifications should be checked with British Gypsum.

NB For heights between 4200mm and 8000mm, Gypframe Deep Flange Floor & Ceiling Channel should be used at base and at head (subject to deflection criteria).

NB For heights over 8000mm, Gypframe Extra Deep Flange Floor & Ceiling Channel should be used at head and base.

Performance (▶ Refer to **section 3 - Basic principles of system design**)

EN

Table 9a – GypWall CLASSIC system at 450mm stud centres using Gyproc Ergo900 plasterboard
Solutions to satisfy the requirements of *BS EN 1364-1: 1999*

1

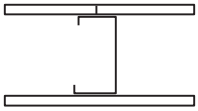

One layer of board each side of 70mm Gypframe 70 S 60 'C' Studs at 450mm centres. Insulation and linings as in table.

2

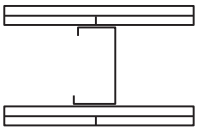

Two layers of board each side of 70mm Gypframe 70 S 60 'C' Studs at 450mm centres. Insulation and linings as in table.

3

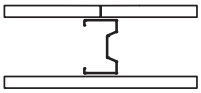

One layer of board each side of 70mm Gypframe 70 AS 50 AcouStuds at 450mm centres. Insulation and linings as in table.

4

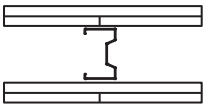

Two layers of board each side of 70mm Gypframe 70 AS 50 AcouStuds at 450mm centres. Insulation and linings as in table.

5

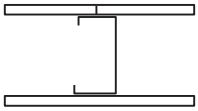

One layer of board each side of 92mm Gypframe 92 S 60 'C' Studs at 450mm centres. Insulation and linings as in table.

6

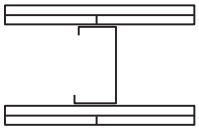

Two layers of board each side of 92mm Gypframe 92 S 60 'C' Studs at 450mm centres. Insulation and linings as in table.

For single layer Severe Duty solutions please also refer to **GypWall ROBUST** and **GypWall EXTREME** sections

Detail	Partition thickness mm	Board type	Lining thickness mm	Max. partition height[1] mm	Isover APR 1200 mm	Sound insulation R_w dB	Duty rating	Approx. weight kg/m²	System reference
30 minutes fire resistance EN									
1	97	Ergo900	1 x 12.5	3900	-	40	Heavy	24	A204001
1	97	Ergo900	1 x 12.5	3900	25	44	Heavy	24	A204003
1	97	Ergo900	1 x 12.5	3900	50	45	Heavy	25	A204005
3	97	Ergo900	1 x 12.5	3900	25	45	Heavy	24	A204A009
3	97	Ergo900	1 x 12.5	3900	50	47	Heavy	25	A204A011
5	119	Ergo900	1 x 12.5	4500	-	41	Heavy	25	A204013
5	119	Ergo900	1 x 12.5	4500	25	45	Heavy	25	A204015
5	119	Ergo900	1 x 12.5	4500	50	47	Heavy	26	A204017
120 minutes fire resistance [2] EN									
2	122	Ergo900	2 x 12.5	4200	-	49	Severe	47	A204002
2	122	Ergo900	2 x 12.5	4000	25	52	Severe	47	A204004
4	122	Ergo900	2 x 12.5	4200	-	52	Severe	47	A204A008
4	122	Ergo900	2 x 12.5	4000	25	57	Severe	47	A204A010
4	122	Ergo900	2 x 12.5	3000	50	58	Severe	48	A204A012
6	144	Ergo900	2 x 12.5	5200	-	50	Severe	48	A204014
6	144	Ergo900	2 x 12.5	4000	25	52	Severe	48	A204016
6	144	Ergo900	2 x 12.5	3000	50	54	Severe	49	A204018

[1] The maximum heights quoted are limited by the fire state field of application or by limiting deflection of L/240 at 200 Pa, whichever is the more onerous.
[2] For alternative heights at 90 minutes, please refer to Gyproc Ergo900 product brochure, available to download from www.british-gypsum.com

NB The fire resistance and sound insulation performances are for imperforate partitions, walls and ceilings incorporating boards with all joints taped and filled, or skimmed according to British Gypsum's recommendations. The quoted performances are achieved only if British Gypsum components are used throughout, and the Company's fixing recommendations are strictly observed. Any variation in the specifications should be checked with British Gypsum.

BS Table 9b – GypWall CLASSIC system at 450mm stud centres using Gyproc Ergo900 plasterboard
Solutions to satisfy the requirements of *BS 476: Part 22: 1987*

1

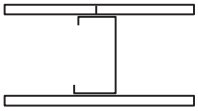

One layer of board each side of 70mm Gypframe 70 S 60 'C' Studs at 450mm centres. Insulation and linings as in table.

2

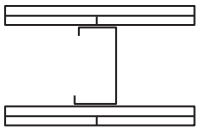

Two layers of board each side of 70mm Gypframe 70 S 60 'C' Studs at 450mm centres. Insulation and linings as in table.

3

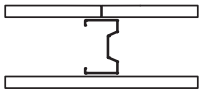

One layer of board each side of 70mm Gypframe 70 AS 50 AcouStuds at 450mm centres. Insulation and linings as in table.

4

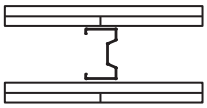

Two layers of board each side of 70mm Gypframe 70 AS 50 AcouStuds at 450mm centres. Insulation and linings as in table.

5

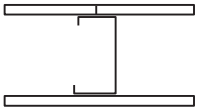

One layer of board each side of 92mm Gypframe 92 S 60 'C' Studs at 450mm centres. Insulation and linings as in table.

6

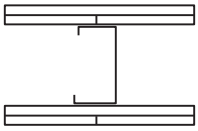

Two layers of board each side of 92mm Gypframe 92 S 60 'C' Studs at 450mm centres. Insulation and linings as in table.

For single layer Severe Duty solutions please also refer to **GypWall ROBUST** and **GypWall EXTREME** sections

Detail	Partition thickness mm	Board type	Lining thickness mm	Max. partition height[1] mm	Isover APR 1200 mm	Sound insulation R_w dB	Duty rating	Approx. weight kg/m²	System reference
30 minutes fire resistance BS									
1	97	Ergo900	1 x 12.5	3900	-	40	Heavy	24	A204001
1	97	Ergo900	1 x 12.5	3900	25	44	Heavy	24	A204003
1	97	Ergo900	1 x 12.5	3900	50	45	Heavy	25	A204005
3	97	Ergo900	1 x 12.5	3900	25	45	Heavy	24	A204A009
3	97	Ergo900	1 x 12.5	3900	50	47	Heavy	25	A204A011
5	119	Ergo900	1 x 12.5	4500	-	41	Heavy	25	A204013
5	119	Ergo900	1 x 12.5	4500	25	45	Heavy	25	A204015
5	119	Ergo900	1 x 12.5	4500	50	47	Heavy	26	A204017
120 minutes fire resistance BS									
2	122	Ergo900	2 x 12.5	4800	-	49	Severe	47	A204002
2	122	Ergo900	2 x 12.5	4800	25	52	Severe	47	A204004
4	122	Ergo900	2 x 12.5	4800	-	52	Severe	47	A204A008
4	122	Ergo900	2 x 12.5	4800	25	57	Severe	47	A204A010
4	122	Ergo900	2 x 12.5	4800	50	58	Severe	48	A204A012
6	144	Ergo900	2 x 12.5	5700	-	50	Severe	48	A204014
6	144	Ergo900	2 x 12.5	5700	25	52	Severe	48	A204016
6	144	Ergo900	2 x 12.5	5700	50	54	Severe	49	A204018

[1] Based on limiting deflection of L/240 at 200 Pa.

NB The fire resistance and sound insulation performances are for imperforate partitions, walls and ceilings incorporating boards with all joints taped and filled, or skimmed according to British Gypsum's recommendations. The quoted performances are achieved only if British Gypsum components are used throughout, and the Company's fixing recommendations are strictly observed. Any variation in the specifications should be checked with British Gypsum.

Design

Planning - key factors
The position of services and heavy fixtures should be pre-determined and their installation planned into the frame erection stage.

Cavity fire barriers
Minimum 12.5mm Gyproc plasterboard, screw-fixed into the web of perimeter channels or vertical studs, will provide a satisfactory closure to flame or smoke.
▶ Refer to **section 10 – Cavity fire barriers**.

Services
Penetrations
Penetrations of fire-resistant or sound-insulating constructions for services need careful consideration to ensure that the performance of the element is not downgraded and also that the services themselves do not act as the mechanism of fire spread or sound transmission.
▶ Refer to **section 3.5 – Service installations**.

Independent support
When designing for the installation of services such as fire dampers and associated ductwork through a **GypWall** partition, consideration should be given to the size and weight of the damper - this will determine whether it can be supported directly from the partition or needs to be independently supported from the structure.
▶ Refer to **section 3.5 – Service installations**.

Electrical
The installation of electrical services should be carried out in accordance with *BS 7671*. The cut-outs in the studs can be used for routing electrical and other small services (see **Construction details – 1**). Switch boxes and socket outlets can be supported from Gypframe 99 FC 50 or 150 FC 90 Fixing Channels fixed horizontally between studs, or a high performance socket box detail used where higher acoustic performance is required.

Where Gypframe AcouStuds are used, services are routed through 50mm x 28mm 'H' shaped push-outs, at the same centres as shown in **Construction details – 1a** for conventional cut-outs. Cables should be protected by conduit, or other suitable precautions taken to prevent abrasion when they pass through the metal frame.

Fixing floor and ceiling channels
Gypframe Floor & Ceiling Channels must be securely fixed with a row of fixings at 600mm maximum centres. For 94mm channels and above, two rows of staggered fixings are required, each row at 600mm centres and each fixing 25mm in from the flange. If the floor is uneven, a 38mm thick timber sole plate equal to the width of the channel should be used.

If the concrete or screeded floor is new, consideration should be given to the installation of a damp-proof membrane between the floor surface and the channel or sole plate.

Door openings
The designer should consider thickness tolerances of the partition types in relation to the proposed door frame detail. Standard door frame detailing to suit *BS 5234* Light and Medium Duty applications is shown in **Construction details – 25**. Detailing to satisfy *BS 5234* requirements for Heavy and Severe Duty is shown in **Construction details – 26 - 27**. The door manufacturer should also be consulted in relation to door details.

Framing surround for openings
Where services such as horizontal ducts, fire dampers and access panels are required to penetrate the wall, their position should be pre-determined in order that a framed opening can be provided. The openings should be constructed using established metal stud procedures. See **Construction details – 31 - 32**.

Control joints
Control joints may be required in the partition to relieve stresses induced by expansion and contraction of the structure (see **Construction details – 14**). They should coincide with movement joints within the surrounding structure.

Deflection heads
Partition head deflection designs may be necessary to accommodate deflections in the supporting floor. Deflection heads may also be required to the underside of roof structures subjected to positive and negative pressures. Refer to **Construction details – 15 - 22**.

For special detailing that minimises the loss of acoustic performance:
▶ Refer to **section 3.2.2 – Principles of building acoustics**.

Access for maintenance
Gyproc Profilex Access Panels are available to provide access for maintenance. Access panels must be fully compatible with drywall construction and match the fire rating of the partition.

Fixtures
Lightweight fixtures can be made directly to the partition linings. Medium weight fixtures can be made to Gypframe 99 FC 50 Fixing Channel. Heavyweight fixtures (to *BS 5234*) such as wash basins and wall cupboards, can be fixed using Gypframe 150 FC 90 Fixing Channel.
▶ Refer to **section 3.5.2 – Service penetrations and fixing into drywall systems**.

Board finishing
▶ Refer to **section 13 – Finishing systems and decorative effects**.

For more information refer to the British Gypsum **SITE** BOOK, available to download from www.british-gypsum.com

▶ Please refer to **section 3 - Basic principles of system design** for general guidance

Construction details

1 Service cut-outs - Gypframe 'C' and Gypframe 'I' Studs

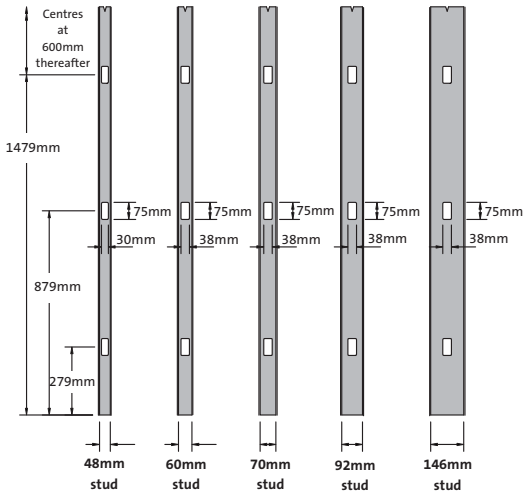

1a Service cut-outs - Gypframe AcouStuds

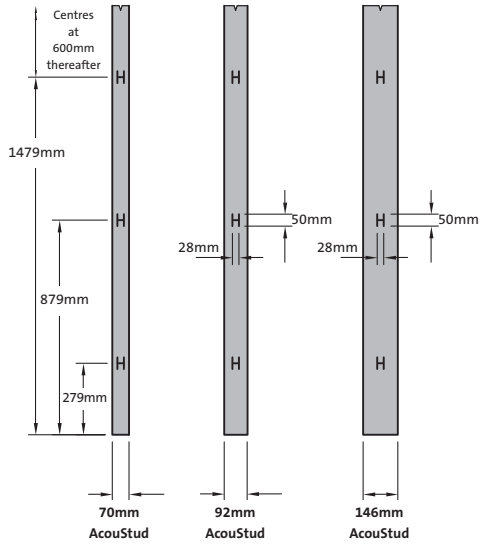

2 Head and base

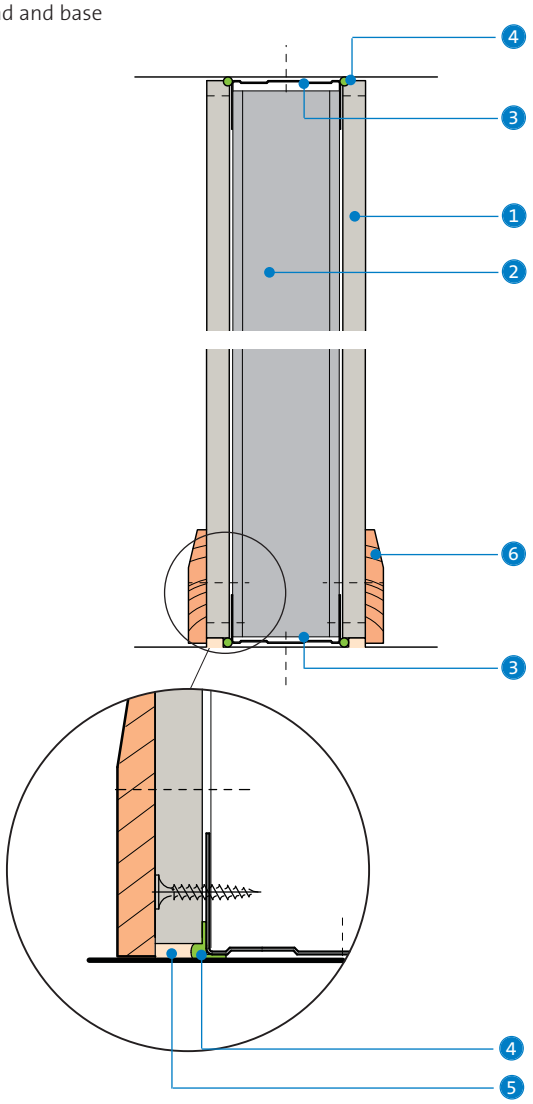

2a Base with timber sole plate

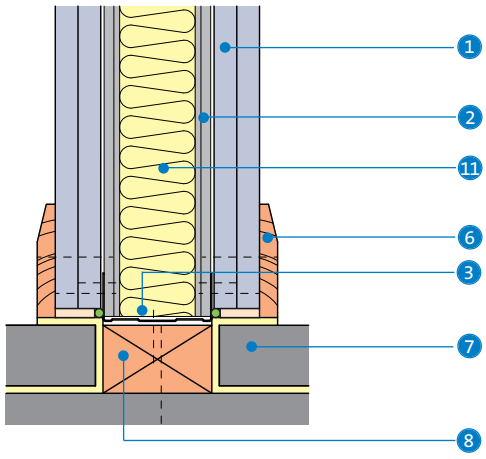

3 Junction with masonry and stop end detail

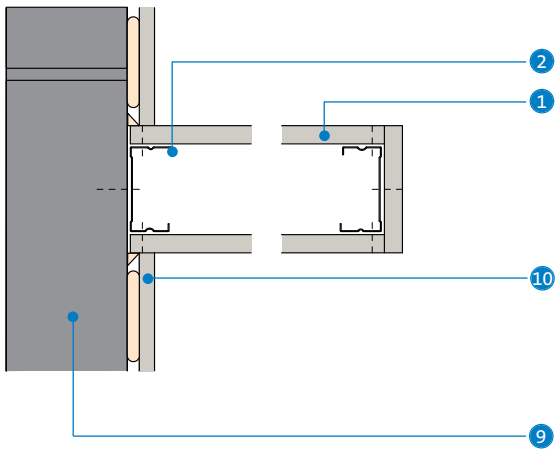

1. Gyproc plasterboard or Glasroc F specialist board
2. Gypframe 'C' Stud
3. Gypframe Floor & Ceiling Channel
4. Gyproc Sealant
5. Bulk fill with Gyproc jointing materials (where gap exceeds 5mm)
6. Skirting
7. Floating screed on resilient layer
8. Timber sole plate suitably fixed to structure
9. Internal blockwork
10. **DriLyner BASIC** wall lining system
11. Isover insulation

Construction details

4 'T' junction - single layer

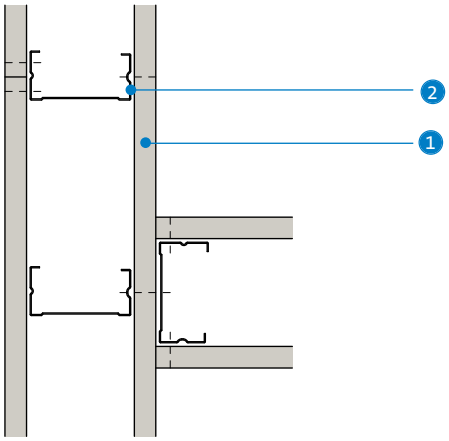

5 'T' Junction when partition with higher acoustic performance abuts a partition with lower acoustic performance. Acoustic principles only - detail may not be suitable for all solutions

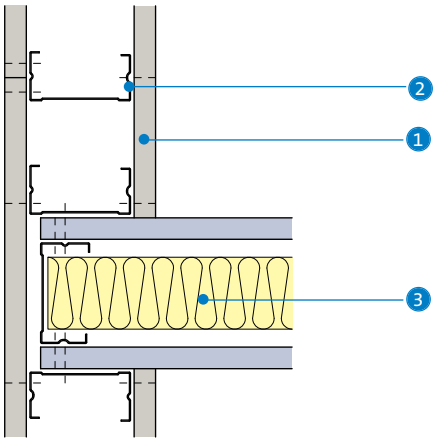

6a 'T' junction to optimise acoustic performance and reduce flanking transmission

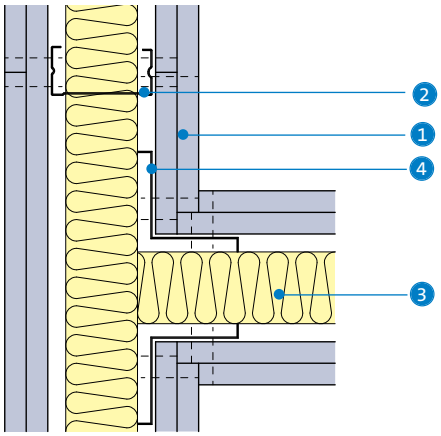

6b 'T' junction to optimise acoustic performance and reduce flanking transmission

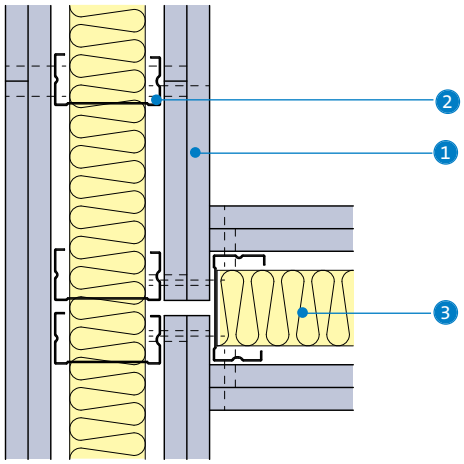

7 Four way junction to optimise acoustic performance and reduce flanking transmission

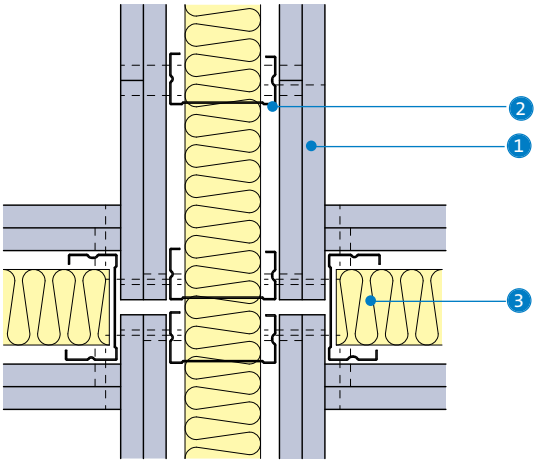

8 Splayed corner

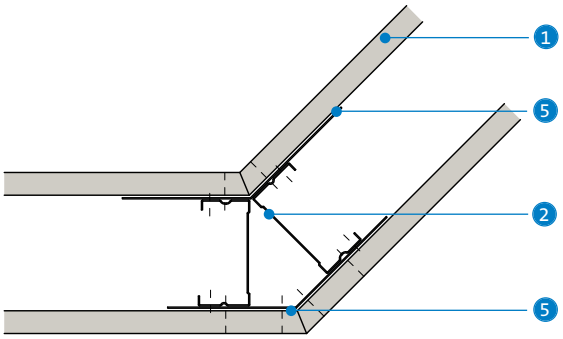

1. Gyproc plasterboard or Glasroc F specialist board
2. Gypframe 'C' Stud
3. Isover insulation
4. Gypframe GA5 Internal Fixing Angle
5. Gypframe GA6 Splayed Angle

Construction details

9 Corner detail - single layer

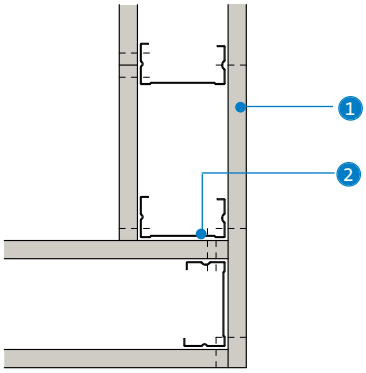

10 Corner detail - double layer

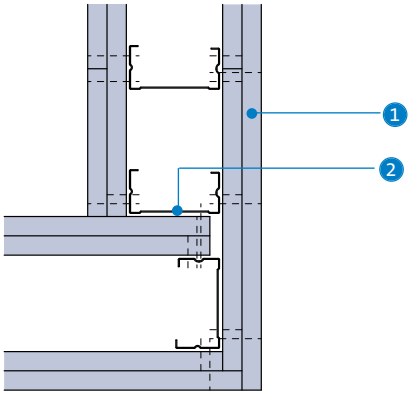

11 Typical control joint

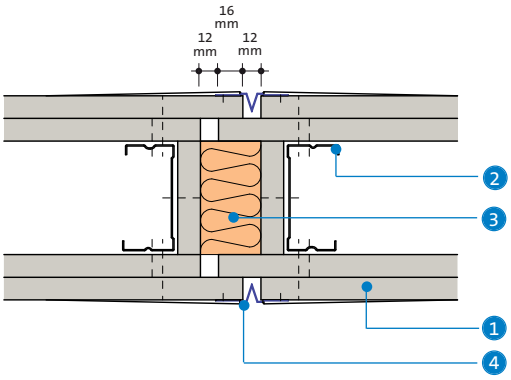

12 Gypframe 99 FC 50 Fixing Channel (short legs flattened at stud positions)

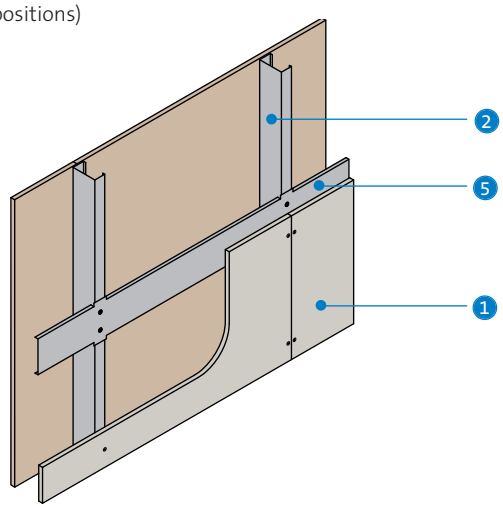

13 Gypframe 150 FC 90 Fixing Channel

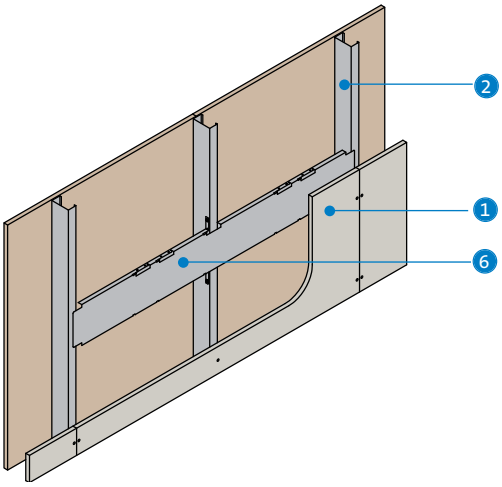

14 Gypframe Service Support Plate

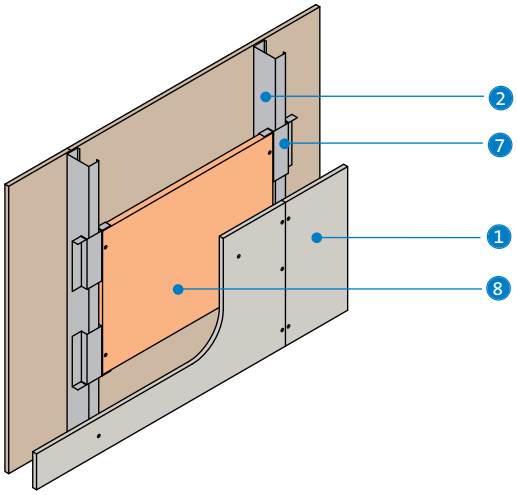

1. Gyproc plasterboard or Glasroc F specialist board
2. Gypframe 'C' Stud
3. Stone mineral wool (minimum density 23kg/m³) (by others)
4. Gyproc Control Joint
5. Gypframe 99 FC 50 Fixing Channel
6. Gypframe 150 FC 90 Fixing Channel
7. Gypframe Service Support Plate
8. 18mm plywood

Construction details

15 Deflection head for 15mm downward movement and 60 minutes fire resistance

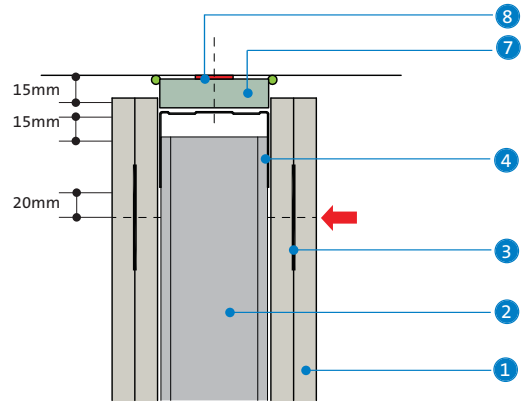

16 Deflection head for 15mm downward movement and up to 120 minutes fire resistance

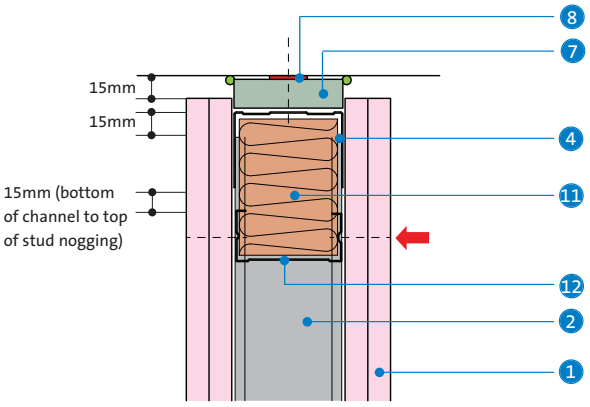

17 Deflection head for plus or minus 25mm movement and 60 minutes fire resistance

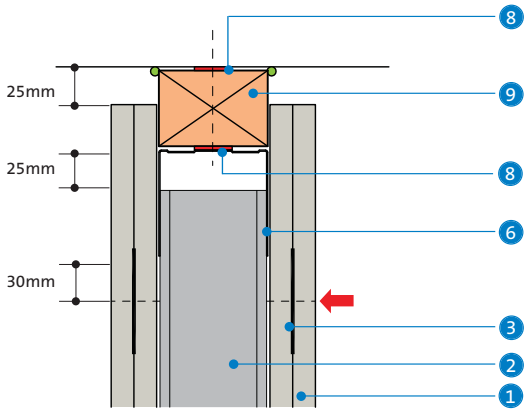

18 Deflection head for 50mm downward movement and 60 minutes fire resistance

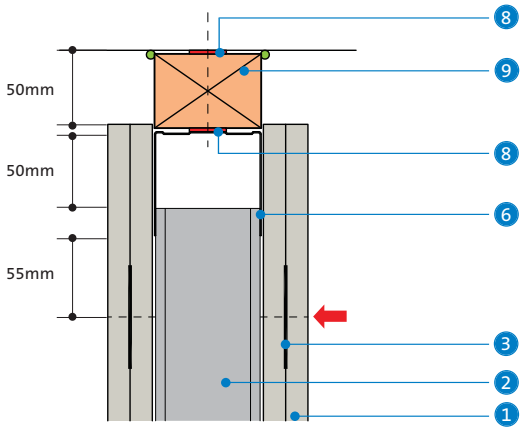

19 Deflection head for plus or minus 25mm movement and 60 minutes fire resistance

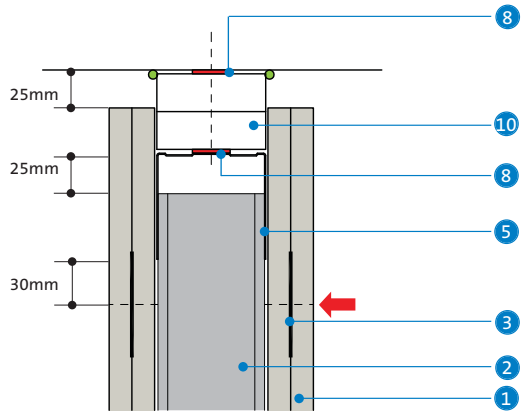

20 Deflection head for 50mm downward movement and 60 minutes fire resistance

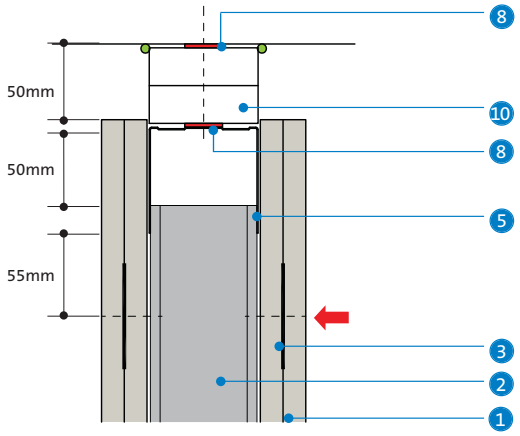

1. Gyproc plasterboard or Glasroc F specialist board
2. Gypframe 'C' Stud
3. Gypframe GFS1 Fixing Strap
4. Gypframe Deep Flange Floor & Ceiling Channel suitably fixed through fire-stop to structure at 600mm
5. Gypframe Extra Deep Flange Floor & Ceiling Channel suitably fixed through fire-stop to structure at 600mm
6. Gypframe Extra Deep Flange Floor & Ceiling Channel fixed to timber head plate
7. Gyproc CoreBoard
8. Gyproc FireStrip (continuous)
9. Timber head plate suitably fixed to structure
10. 25mm Glasroc F FIRECASE
11. Stone mineral wool (minimum 33kg/m³) retained by stud nogging (by others)
12. Nogging cut from Gypframe 'C' Stud

NB No fixings should be made through the boards into the flanges of the head channel. The arrow ( ) denotes the position of the uppermost board fixing, which should be made into Gypframe GFS1 Fixing Strap (or stud nogging in Construction details - 16). Continuous Gyproc FireStrip must be installed as shown to maintain fire performance. Where there is a need for a deflection head in a 90 minute wall, the 120 minute solution can be used (refer to Construction details - 16) or alternatively, please contact the British Gypsum Drywall Academy for further guidance.

Construction details

21 Deflection head parallel to floor profile for 15mm downward movement and up to 60 minutes fire resistance

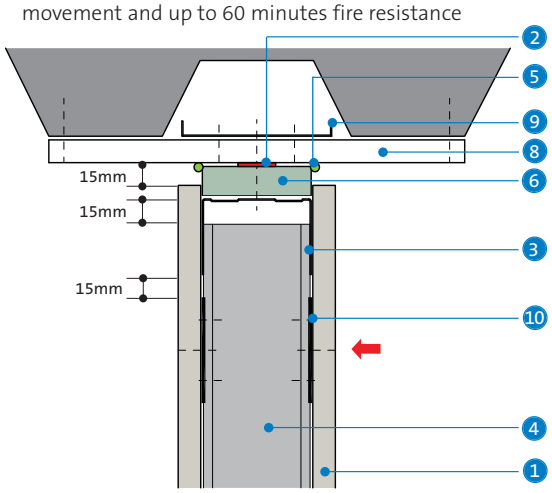

22 Deflection head perpendicular to floor profile for 15mm downward movement and up to 60 minutes fire resistance

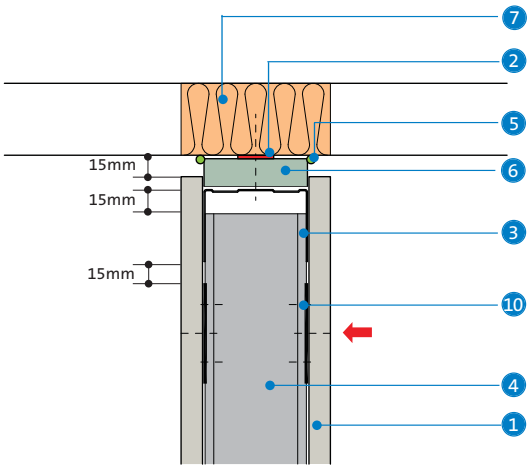

23 Junction with external wall

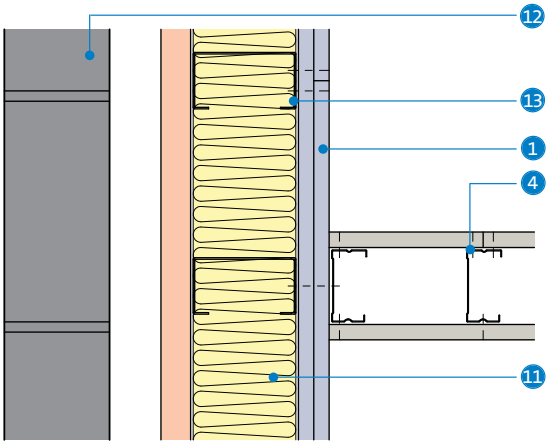

24 Junction with external wall when acoustic performance is a key consideration - helps reduce flanking transmission

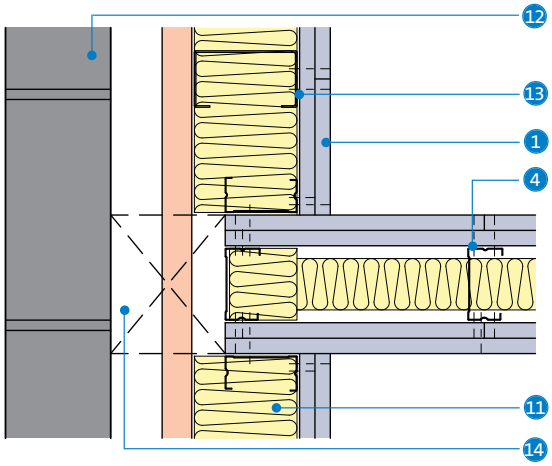

1. Gyproc plasterboard or Glasroc F specialist board
2. Gyproc FireStrip (continuous line)
3. Gypframe Deep Flange Floor & Ceiling Channels (DC)
4. Gypframe 'C' Stud
5. Gyproc Sealant
6. Gyproc CoreBoard
7. Fire-stopping (by others)
8. Glasroc F FIRECASE
9. Gypframe 99 FC 50 Fixing Channel
10. Gypframe GFS1 Fixing Strap fixed to studs with Gyproc Wafer Head Drywall Screws
11. Isover insulation
12. External cladding
13. External wall stud framework
14. Cavity barrier (subject to regulatory requirements)

NB No fixings should be made through the boards into the flanges of the head channel. The arrow (⬅) denotes the position of the uppermost board fixing, which should be made into Gypframe GFS1 Fixing Strap. Continuous Gyproc FireStrip must be installed as shown to maintain fire performance.

Construction details

25 Door frame to satisfy *BS 5234: Parts 1 & 2: 1992 - Light and Medium Duty*

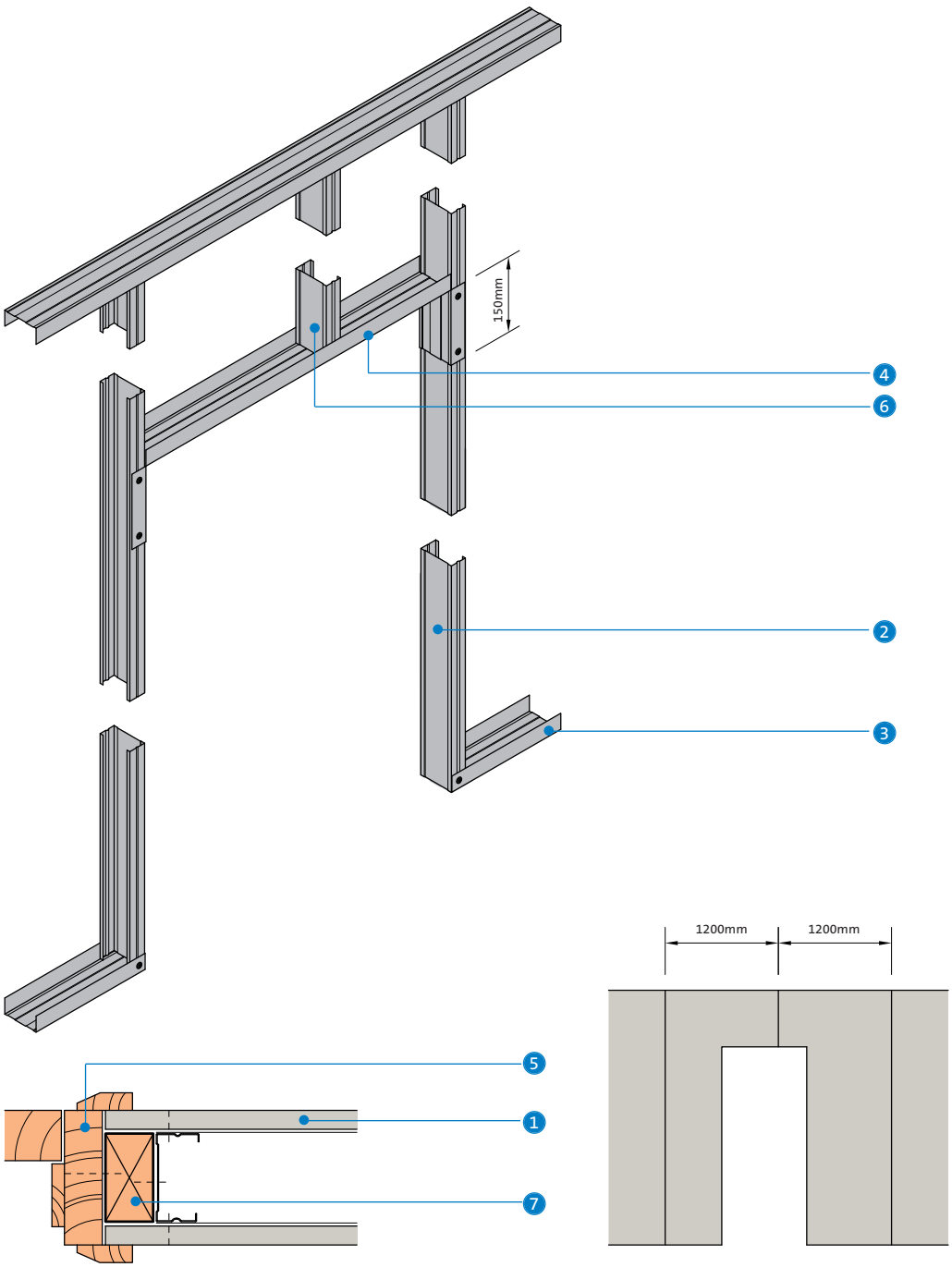

1. Gyproc plasterboard or Glasroc F specialist board
2. Gypframe 'C' Stud
3. Gypframe Floor & Ceiling Channel
4. Gypframe Floor & Ceiling Channel cut and bent to form door head
5. Timber door frame and architrave
6. Gypframe 'C' Stud to maintain stud module
7. Timber sub-frame

NB Advice should be sought from the door manufacturer prior to the construction of these details.

Construction details

26 Door frame to satisfy *BS 5234: Parts 1 & 2: 1992 - Heavy and Severe Duty*

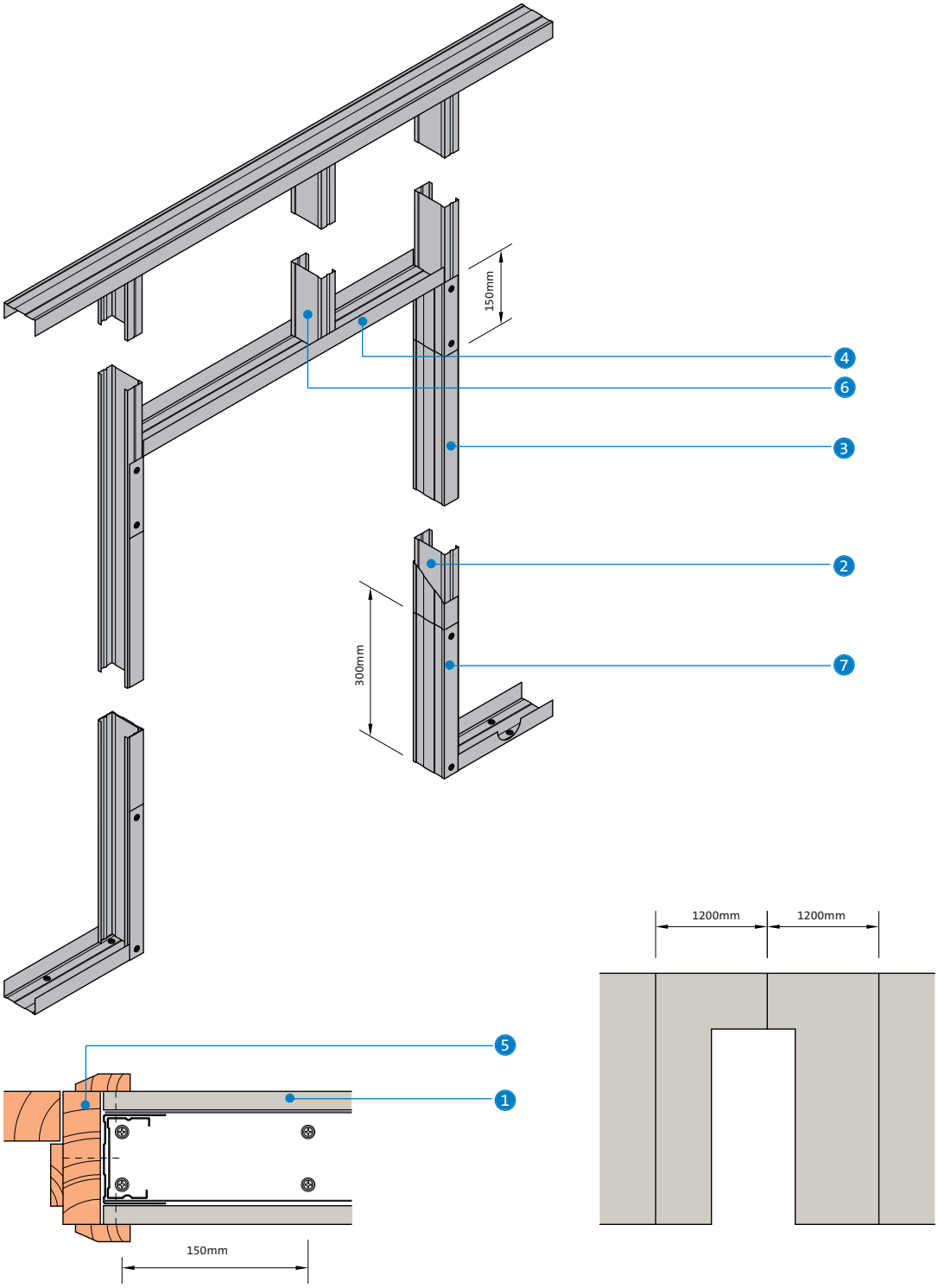

1. Gyproc plasterboard or Glasroc F specialist board
2. Gypframe 'C' Stud
3. Gypframe Floor & Ceiling Channel to sleeve studs
4. Gypframe Floor & Ceiling Channel cut and bent to form door head
5. Timber door frame and architrave
6. Gypframe 'C' Stud to maintain stud module
7. Gypframe Floor & Ceiling Channel cut and bent to extend up studs

NB Advice should be sought from the door manufacturer prior to the construction of these details.

NB At the base, the channel is cut and bent to extend 300mm up the studs and fixed each side with two Gyproc Wafer Head Drywall Screws. The studs each side of the opening are sleeved full height of opening with Gypframe Floor & Ceiling Channel.

Construction details

27 Alternative door frame to satisfy *BS 5324: Parts 1 & 2: 1992 - Heavy and Severe Duty*

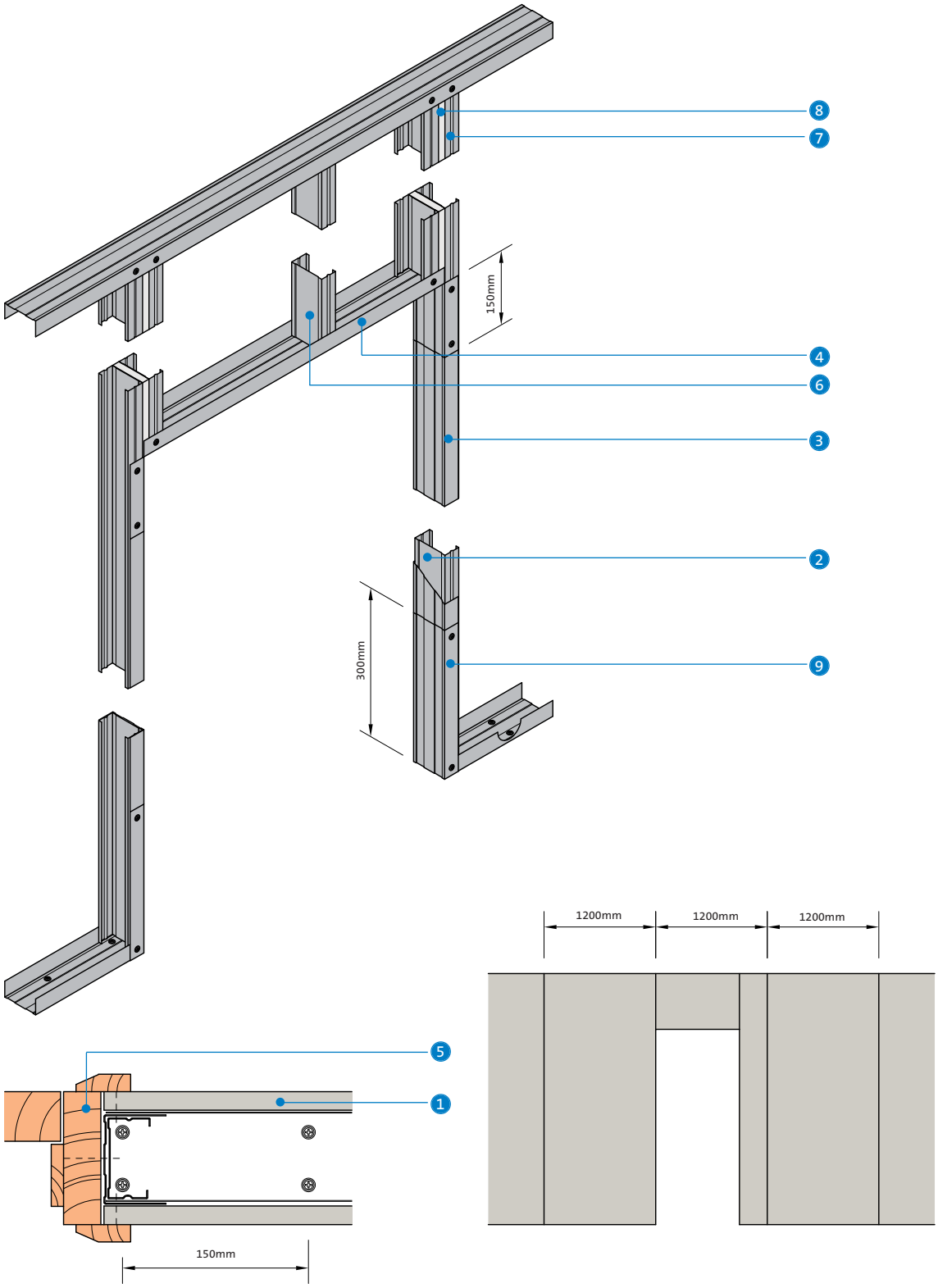

1. Gyproc plasterboard or Glasroc F specialist board
2. Gypframe 'C' Stud
3. Gypframe Floor & Ceiling Channel to sleeve studs
4. Gypframe Floor & Ceiling Channel cut and bent to form door head
5. Timber door frame and architrave
6. Gypframe 'C' Stud to maintain stud module
7. Gypframe 'C' Studs fixed back to back with Gyproc Drywall Screws at 300mm centres staggered
8. Plasterboard infill (same type as lining) cut to fit between studs
9. Gypframe Floor & Ceiling Channel cut and bent to extend up studs

NB Advice should be sought from the door manufacturer prior to the construction of these details.

NB At the base, the channel is cut and bent to extend 300mm up the studs and fixed each side with two Gyproc Wafer Head Drywall Screws. The studs each side of the opening are sleeved full height of opening with Gypframe Floor & Ceiling Channel.

NB The principle of this alternative detail is only suitable for **GypWall CLASSIC**, **GypWall ROBUST** and **GypWall EXTREME** for fixed head situations only.

Construction details

28 Board layout - typical configuration

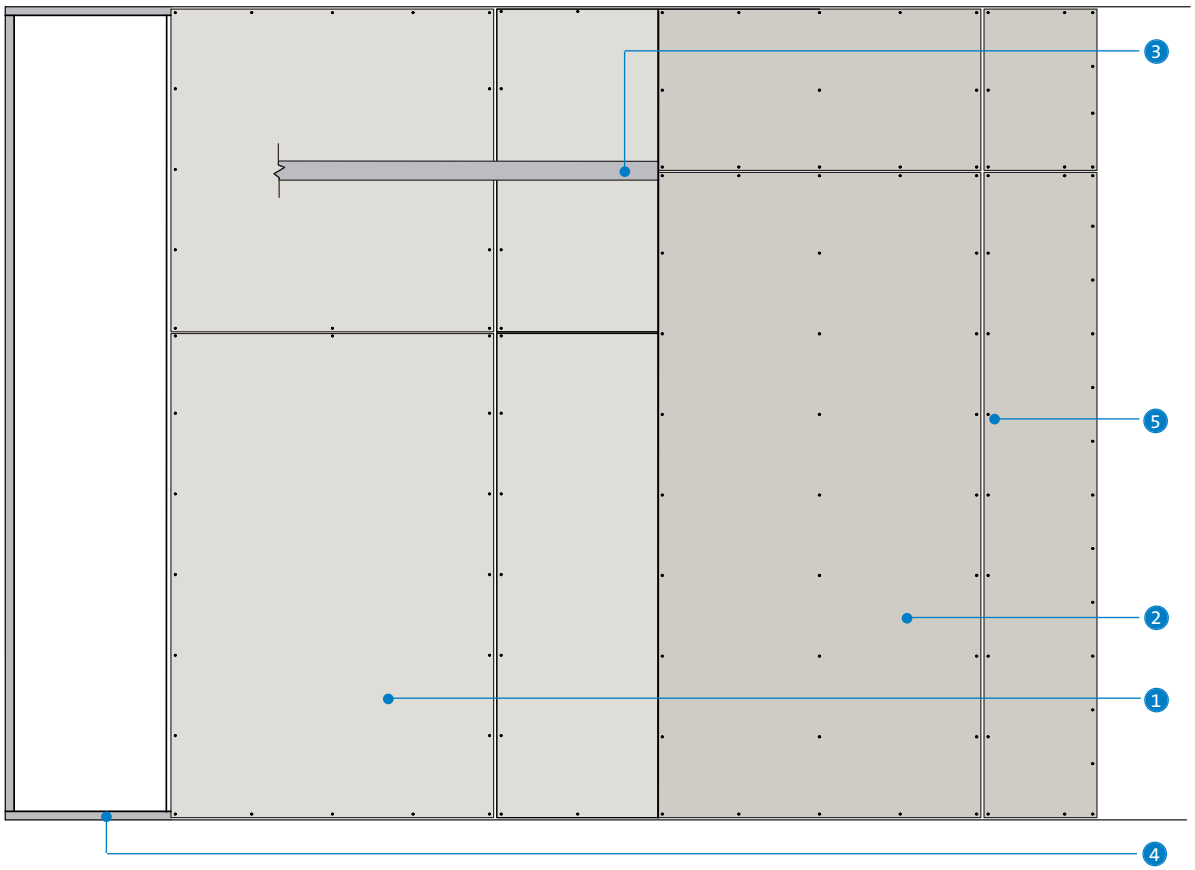

29 Horizontal board joint - double layer

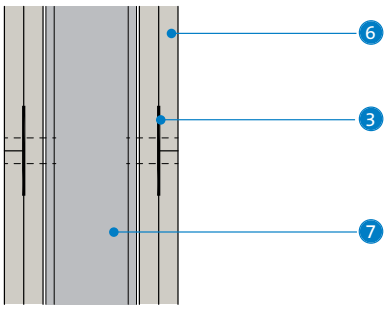

30 Horizontal board joint - single layer

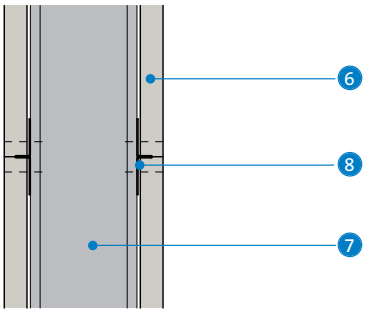

1. Inner layer of Gyproc plasterboard or Glasroc F specialist board
2. Outer layer of Gyproc plasterboard or Glasroc F specialist board
3. Gypframe GFS1 Fixing Strap
4. Gypframe metal framing
5. Gyproc Drywall Screws
6. Gyproc plasterboard or Glasroc F specialist board
7. Gypframe 'C' Stud
8. Gypframe GFT1 Fixing T (alternatively use Gypframe GFS1 Fixing Strap)

Construction details

31 Opening for service penetrations in fire-rated partitions

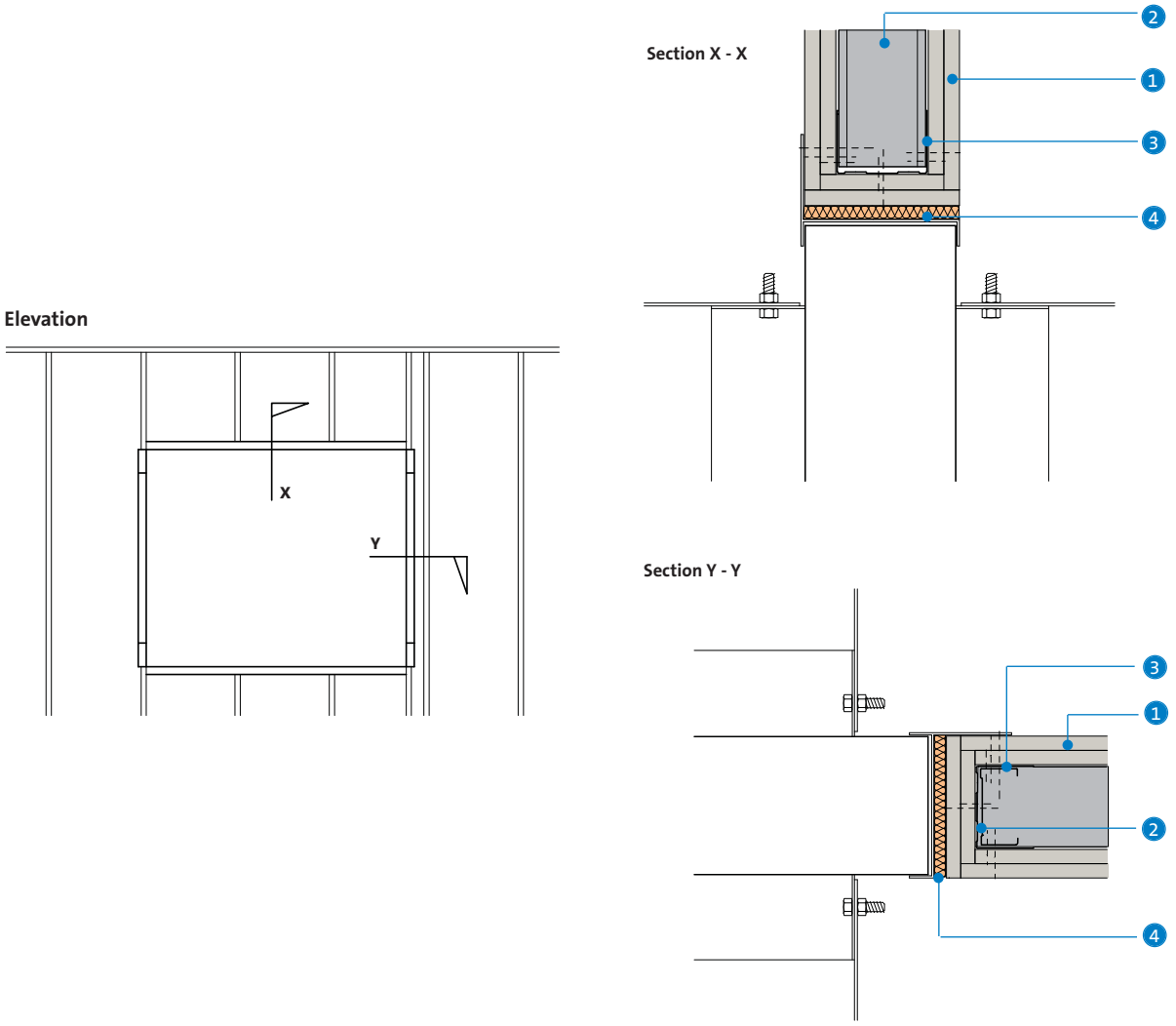

32 Fire tested construction in which the damper is supported by the partition (isometric view)

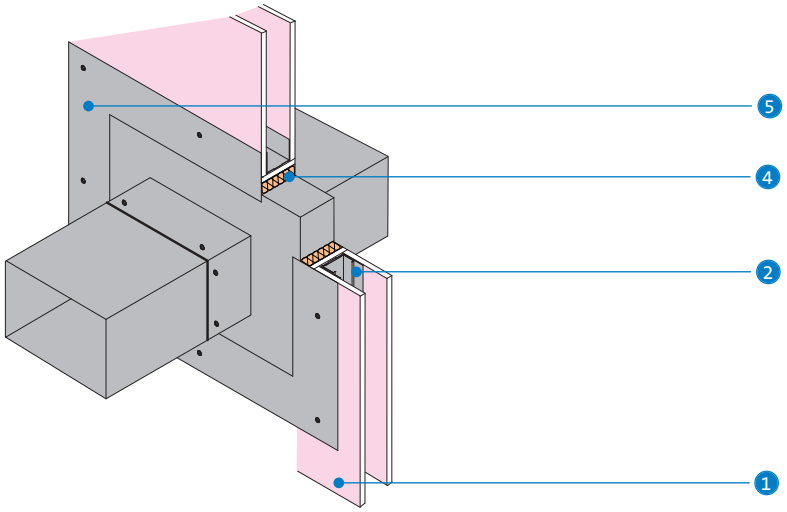

1. Gyproc plasterboard or Glasroc F specialist board
2. Gypframe 'C' Stud
3. Gypframe Floor & Ceiling Channel
4. Penetration seal (as tested by damper manufacturer or proprietary alternative, confirmed as compatible by system designer / specifier (plasterboard lining around opening may not be required)
5. Damper (by others). Weight of damper should not exceed 57kg. Size of damper should not exceed 1400 x 1200mm

GypWall CURVE

Curved wall lining system

This section includes updated information, added since it was first published in July 2009. Please see the WHITE BOOK update document for details.
Last updated 01/12/2009

Hard Days Night Hotel, Liverpool

GypWall CURVE

GypWall CURVE is a highly cost-effective system specially designed to provide curved walls and linings. This system can be installed in all types of buildings to deliver design flexibility and aesthetic impact.

A Gypframe 'C' Stud

B Gypframe 72 EDCL 80 CurveLyner Channel

Key facts

- Minimum radii 600mm
- Uniquely designed channel can be quickly and easily shaped to radius
- No need for curved timber templates
- Choice of linings to suit performance requirements and to maintain continuity
- Boards can be jointed or skimmed in the normal way

Applications

A wide range of applications, for example receptions, communal areas and atria.

Sector

- ✓ Office / commercial
- ✓ Education
- ✓ Auditoria
- ✓ Retail
- ✓ Healthcare
- ✓ Sport and leisure
- ✓ High-rise multi-occupancy

System components

Gypframe metal products

70 S 50 'C' Stud

Length
2400, 2700, 3000mm
3600, 4200mm

70 S 60 'C' Stud

Length
3600, 4200mm

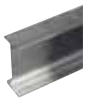

70 I 50 'I' Stud

Length
3600, 4200mm

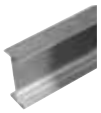

70 I 70 'I' Stud

Length
3600, 4200mm

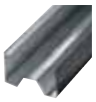

70 AS 50 AcouStud

Length
2400, 2700, 3000mm
3600, 4200mm

72 EDCL 80 CurveLyner Channel

Length
2000mm

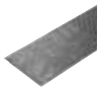

GFS1 Fixing Strap

Length
2400mm

Board products

Gyproc WallBoard[1]
Thickness 9.5, 12.5, 15mm
Width 1200mm

Gyproc SoundBloc[1]
Thickness 12.5, 15mm
Width 1200mm

Gyproc FireLine[1]
Thickness 12.5, 15mm
Width 1200mm

Gyproc DuraLine[1]
Thickness 15mm
Width 1200mm

Glasroc F MULTIBOARD
Thickness 6, 10, 12.5mm
Width 1200mm

[1] Moisture resistant boards are specified in intermittent wet use areas, e.g. shower cubicles.

Fixing and finishing products

Gyproc Wafer Head Jack-Point Screws
For Gypframe metal-to-metal fixing 0.8mm thick or greater ('I' studs 0.6mm thick and greater).

Gyproc Drywall Screws
For fixing boards to Gypframe metal framing less than 0.8mm thick ('I' studs less than 0.6mm thick).

or

Gyproc Jack-Point Screws
For fixing boards to Gypframe metal framing 0.8mm thick or greater ('I' studs 0.6mm thick and greater).

Gyproc Sealant
Sealing air paths for optimum sound insulation.

Gyproc jointing materials
For seamless jointing.

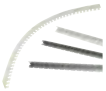

Gyproc edge and angle beads
Protecting and enhancing board edges and corners.

Gyproc FireStrip
For fire-stopping deflection heads.

Thistle Board Finish or Thistle Multi-Finish
To provide a plaster skim finish.

or

Thistle Durafinish
To provide improved resistance to accidental damage.

Insulation products

Isover APR 1200
25mm, for improved acoustic performance.

Installation overview

Gypframe 72 EDCL 80 CurveLyner Channel is bent to the floor and ceiling lines and fixed through to the floor and soffit in two lines at 300mm centres in each line. 70mm Gypframe Studs are fitted vertically within channel sections, and to abutments, to form the framework. Studs are fixed into the channel at both head and base and must all face the same way. If a deflection head is required, the studs should not be fixed into the head channel and alternative temporary support may be required to stabalise the stud at the head whilst boarding proceeds. Additional framing is installed as required to support heavy fixtures.

For single layer board linings, fix boards horizontally. Stagger board joints and avoid vertical joints occuring on the apex of the curve.

For double layer board linings, inner boards are fixed horizontally to all supports. Face layer boards are fixed horizontally with joints staggered in relation to the first layer. Vertical joints occuring on the apex of the curve in the face layer should be avoided. Additional studs may be required where multiple layers are specified to account for the difference that arises between inner and outer radii.

Services

Electrical and other services are normally installed after one side is boarded.

For full installation details, refer to the British Gypsum **SITE** BOOK, available to download from www.british-gypsum.com

For full installation details, refer to the British Gypsum **SITE BOOK**, available to download from www.british-gypsum.com

Performance

Fire resistance
There is no specific standard against which to test curved walls and linings, but ad hoc testing has been carried out which confirms that a similar performance can be achieved to that claimed for the straight partition.

Impact resistance
Glasroc F MULTIBOARD offers a high degree of impact resistance. It also has excellent mechanical properties, is not brittle and therefore is not prone to cracking or shattering when handled.

Degree of curvature
In common with other sheet materials, board-ends have a tendency to remain straight. The minimum radius, therefore, will be influenced by the board characteristics, the length of curve, the support centres, and the occurrence of board joints.

Sound insulation
Reducing the centres of the metal studs within GypWall CURVE can have a detrimental effect on sound insulation. Include 25mm Isover APR 1200 in the cavity for improved acoustic performance.
▶ Refer to **section 3.4.2 – Principles of robust design.**

Table 1 – Minimum bending radii and stud centres

Board type	Thickness mm	Minimum radius[1] mm	Stud centres mm[2]
Glasroc F MULTIBOARD	6	600	300
	10	2500	300
	12 (2 x 6)	600	300
	12.5	2700	300
Gyproc WallBoard	9.5	1800	300
	12.5	3600	300
	15	4800	300
Gyproc FireLine	12.5	4800	300
	15	5700	400
Gyproc SoundBloc	12.5	2900	300
	15	3600	300
Gyproc DuraLine	15	5700	400

[1] Concave or convex.
[2] For any radius 7000mm or more, studs can be installed at 600mm centres irrespective of board type with the exception of 6mm Glasroc F MULTIBOARD.

NB Double layer specifications can be used if required to meet specific performance criteria.

Design

Planning
The positioning of vertical board joints on exposed board layers at the apex of the curve should be avoided. The positioning of all studs, therefore, needs to be determined at the design stage. Where straight runs occur within curved partitions or linings, stud centres can be increased as determined by the specification.

Fixing floor and ceiling channels
Gypframe 72 EDCL 80 CurveLyner must be securely fixed in two lines at 300mm centres in each line. If the floor is uneven, a 38mm thick timber sole plate equal to the width of the channel should be used.

If the concrete or screeded floor is new, consideration should be given to the installation of a damp-proof membrane between the floor surface and the channel or sole plate.

Cavity fire barriers
Minimum 12.5mm Gyproc plasterboard can be used to form a cavity closure within the partition to prevent the spread of fire or smoke.
▶ Refer to **section 10 – Cavity fire barriers.**

Electrical
The installation of electrical services should be carried out in accordance with *BS 7671*. The cut-outs in the studs can be used for routing electrical and other small services (see **GypWall CLASSIC Construction details – 1**). Switch boxes and socket outlets can be supported from Gypframe 99 FC 50 or 150 FC 90 Fixing Channels fixed horizontally between studs, or a high performance socket box detail where higher acoustic performance is required.

Where Gypframe AcouStuds are used, services are routed through 50mm x 28mm 'H' shaped push-outs, at the same centres as shown in **GypWall CLASSIC Construction details – 1a** for conventional cut-outs. Cables should be protected by conduit, or other suitable precautions taken to prevent abrasion when they pass through the metal frame.

Board finishing
▶ Refer to **section 13 – Finishing systems and decorative effects.**

Construction details

1 Head

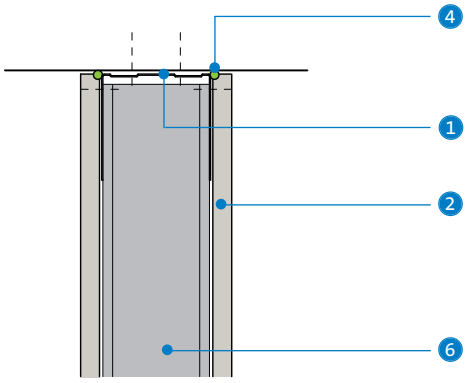

2 Base

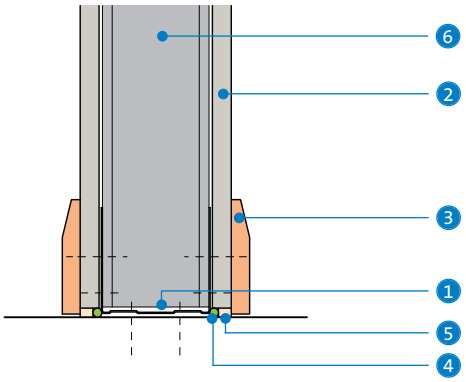

3 Deflection head for 15mm downward movement and 60 minutes fire resistance

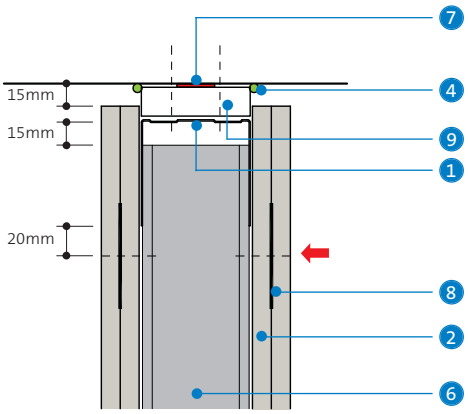

1. Gypframe 72 EDCL 80 CurveLyner Channel
2. Gyproc plasterboard or Glasroc F MULTIBOARD
3. Skirting
4. Gyproc Sealant
5. Bulk fill with Gyproc jointing materials (where gap exceeds 5mm)
6. Gypframe 'C' Stud
7. Gyproc FireStrip
8. Gypframe GFS1 Fixing Strap
9. 20mm Glasroc F FIRECASE cut to required curve

NB No board fixings should be made into the head channel. The arrow (⬅) denotes the uppermost board fixing, which should be made into Gypframe GFS1 Fixing Strap. Continuous Gyproc FireStrip must be installed as shown to maintain fire performance.

GypWall ROBUST

Durable impact resistant partition system

This section includes updated information, added since it was first published in July 2009. Please see the WHITE BOOK update document for details.
Last updated 21/01/2011

Manchester Joint Hospitals

GypWall ROBUST

42 – 58 R_w dB 60 – 90 mins

GypWall ROBUST is a high impact-resistant partition system for use where a more durable structure is required. It provides a lightweight, cost-effective, non-loadbearing partition suitable for all types of commercial, healthcare and educational buildings.

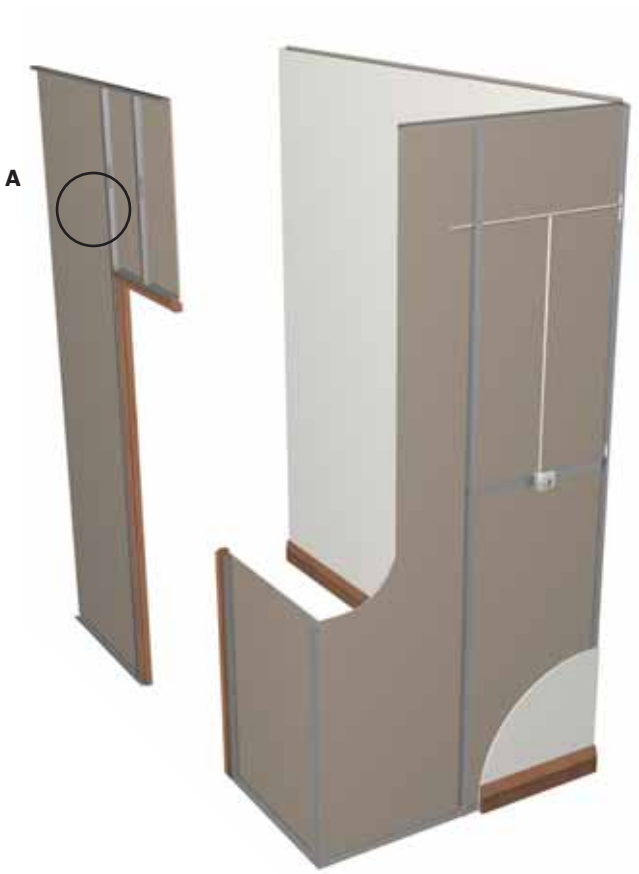

A

Gypframe 'C' Stud

OR

Gypframe 'I' Stud

OR

Gypframe AcouStud

Key facts

In addition to the benefits of GypWall CLASSIC:

- High impact resistance
- Satisfies *BS 5234* requirements to Severe Duty[1] in a single layer
- Single layer 60 minutes fire resistance to EN standards
- Available in 70mm, 92mm and 146mm stud options
- Accommodates services within the stud cavity
- Achieves high levels of sound insulation with single layer

[1] Refer to **section 3.4.2 - Principles of robust design**.

Applications

Major circulation areas, for example corridors and stairwells.

Sector

- ✓ Sport and leisure
- ✓ Education
- ✓ Healthcare
- ✓ Industrial
- ✓ Custodial
- ✓ High-rise multi-occupancy

System components

Gypframe metal products

70 S 60 'C' Stud — **Length** 3600, 4200mm

92 S 60 'C' Stud — **Length** 4200mm

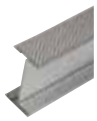

70 I 50 'I' Stud — **Length** 3600, 4200mm

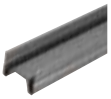

70 AS 50 AcouStud — **Length** 2400, 2700, 3000mm, 3600, 4200mm

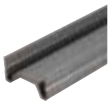

92 AS 50 AcouStud — **Length** 3600, 4200mm

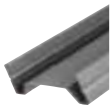

146 AS 50 AcouStud — **Length** 3600mm

Deep Flange Floor & Ceiling Channel
72 DC 60, 94 DC 60, 148 DC 60
Extra Deep Flange Floor & Ceiling Channel
72 EDC 80, 94 EDC 70, 148 EDC 80
All channels are available in 3600mm only.

99 FC 50 Fixing Channel — **Length** 2400mm

150 FC 90 Fixing Channel — **Length** 1197mm

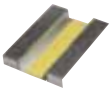

Service Support Plate For the installation of plywood within a partition cavity. — **Length** 130mm

GFS1 Fixing Strap — **Length** 2400mm

or

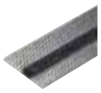

GFT1 Fixing 'T' — **Length** 2400mm

Board products

Gyproc DuraLine[1]
Thickness 15mm
Width 1200mm

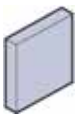

Gyproc SoundBloc[1] (for inner layers)
Thickness 12.5, 15mm
Width 1200mm

[1] Moisture resistant boards are specified in intermittent wet use areas, e.g. shower cubicles.

Fixing and finishing products

Gyproc Wafer Head Drywall Screws
For Gypframe metal-to-metal fixing less than 0.8mm thick ('I' studs less than 0.6mm thick).

Gyproc Drywall Screws
For fixing boards to Gypframe metal framing less than 0.8mm thick ('I' studs less than 0.6mm thick).

Gyproc Sealant
Sealing air paths for optimum sound insulation.

Gyproc jointing materials
For seamless jointing.

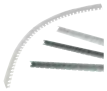

Gyproc edge and angle beads
Protecting and enhancing board edges and corners.

Gyproc Control Joint
To accommodate structural movement.

Gyproc FireStrip
For fire-stopping deflection heads.

Thistle Board Finish or Thistle Multi-Finish
To provide a plaster skim finish.

or

Thistle Durafinish
To provide improved resistance to accidental damage.

Insulation products

Isover APR 1200
25mm and 50mm, for improved acoustic performance.

Isover Modular Roll
80mm, for improved acoustic performance.

Isover High Performance Acoustic Slab
75mm, for improved acoustic performance.

Always use genuine branded British Gypsum components to qualify for **SpecSure**® lifetime warranty

Installation overview

Gypframe Deep Flange Floor & Ceiling Channel is fixed to the floor and soffit. Gypframe studs are fitted vertically to a friction-fit at 600mm centres within the channel sections, and to abutments, to form the framework. This allows for adjustment during boarding. Gypframe 'C' Studs are fitted so as to all face the same way. Additional framing is installed as required to support heavy fixtures.

Gyproc DuraLine boards are screw-fixed to framing members to form the lining. Horizontal board-end joints should be backed with Gypframe GFS1 Fixing Strap or Gypframe GFT1 Fixing 'T'.

Services

Electrical and other services are normally installed after one side is boarded. Horizontal runs are routed through cut-outs in the studs. Gypframe 99 FC 50 Fixing Channel can be installed between studs to support recessed switch boxes / socket outlets.

For full installation details, refer to the British Gypsum **SITE BOOK**, available to download from www.british-gypsum.com

For full installation details, refer to the British Gypsum **SITE BOOK**, available to download from www.british-gypsum.com

Performance (▶ Refer to **section 3 - Basic principles of system design**)

EN

Table 1a – GypWall ROBUST 70mm Gypframe 'C' Studs and Gypframe AcouStuds - single layer board linings
Solutions to satisfy the requirements of *BS EN 1364-1: 1999*

1

One layer of board each side of Gypframe 70 S 60 'C' Studs at 600mm centres. Linings as in table.

2

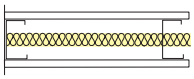

One layer of board each side of Gypframe 70 S 60 'C' Studs at 600mm centres. 25mm Isover APR 1200 in the cavity. Linings as in table.

3

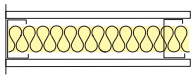

One layer of board each side of Gypframe 70 S 60 'C' Studs at 600mm centres. 50mm Isover APR 1200 in the cavity. Linings as in table.

4

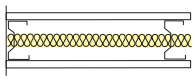

One layer of board each side of Gypframe 70 AS 50 AcouStuds at 600mm centres. 25mm Isover APR 1200 in the cavity. Linings as in table.

5

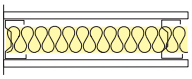

One layer of board each side of Gypframe 70 AS 50 AcouStuds at 600mm centres. 50mm Isover APR 1200 in the cavity. Linings as in table.

6

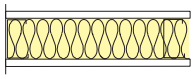

One layer of board each side of Gypframe 70 S 60 'C' Studs at 600mm centres. 80mm Isover Modular Roll in the cavity. Linings as in table.

7

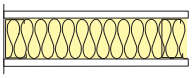

One layer of board each side of Gypframe 70 S 60 'C' Studs at 600mm centres. 75mm Isover High Performance Acoustic Slab in the cavity. Linings as in table.

Detail	Partition thickness mm	Board type	Lining thickness mm	Max. partition height[1] mm	Sound insulation R_w dB	Duty rating	Approx. weight kg/m²	System reference
60 minutes fire resistance EN								
1	102	DuraLine	1 x 15	4000	42	Severe	29	Q606043
2	102	DuraLine	1 x 15	4000	47	Severe	29	Q606044
3	102	DuraLine	1 x 15	4000	48	Severe	29	Q606045
4	102	DuraLine	1 x 15	4000	48	Severe	29	Q606A044
5	102	DuraLine	1 x 15	4000	50	Severe	29	Q606A046
6	102	DuraLine	1 x 15	4000	50	Severe	29	Q606047
7	102	DuraLine	1 x 15	4000	51	Severe	29	Q606048

[1] The maximum heights quoted are limited by the fire state field of application or by limiting deflection of L/240 at 200 Pa, whichever is the more onerous.

NB The fire resistance and sound insulation performances are for imperforate partitions, walls and ceilings incorporating boards with all joints taped and filled, or skimmed according to British Gypsum's recommendations. The quoted performances are achieved only if British Gypsum components are used throughout, and the Company's fixing recommendations are strictly observed. Any variation in the specifications should be checked with British Gypsum.

NB Gypframe Deep Flange Floor & Ceiling Channel or Gypframe Extra Deep Flange Floor & Ceiling Channel should be used at base and at head (subject to deflection criteria).

BS Table 1b – GypWall ROBUST 70mm Gypframe 'C' Studs and Gypframe AcouStuds - single layer board linings
Solutions to satisfy the requirements of *BS 476: Part 22: 1987*

1

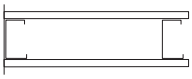

One layer of board each side of Gypframe 70 S 60 'C' Studs at 600mm centres. Linings as in table.

2

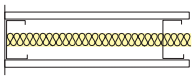

One layer of board each side of Gypframe 70 S 60 'C' Studs at 600mm centres. 25mm Isover APR 1200 in the cavity. Linings as in table.

3

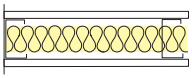

One layer of board each side of Gypframe 70 S 60 'C' Studs at 600mm centres. 50mm Isover APR 1200 in the cavity. Linings as in table.

4

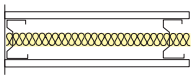

One layer of board each side of Gypframe 70 AS 50 AcouStuds at 600mm centres. 25mm Isover APR 1200 in the cavity. Linings as in table.

5

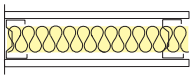

One layer of board each side of Gypframe 70 AS 50 AcouStuds at 600mm centres. 50mm Isover APR 1200 in the cavity. Linings as in table.

6

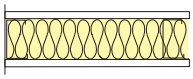

One layer of board each side of Gypframe 70 S 60 'C' Studs at 600mm centres. 80mm Isover Modular Roll in the cavity. Linings as in table.

7

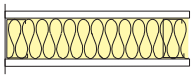

One layer of board each side of Gypframe 70 S 60 'C' Studs at 600mm centres. 75mm Isover High Performance Acoustic Slab in the cavity. Linings as in table.

Detail	Partition thickness mm	Board type	Lining thickness mm	Max. partition height[1] mm	Sound insulation R_w dB	Duty rating	Approx. weight kg/m²	System reference
60 minutes fire resistance BS								
1	102	DuraLine	1 x 15	4000	42	Severe	29	Q606043
2	102	DuraLine	1 x 15	4000	47	Severe	29	Q606044
3	102	DuraLine	1 x 15	4000	48	Severe	29	Q606045
4	102	DuraLine	1 x 15	4000	48	Severe	29	Q606A044
5	102	DuraLine	1 x 15	4000	50	Severe	29	Q606A046
6	102	DuraLine	1 x 15	4000	50	Severe	29	Q606047
7	102	DuraLine	1 x 15	4000	51	Severe	29	Q606048

[1] Based on a limiting deflection of L/240 at 200 Pa. Greater heights can be achieved through the use of reduced stud centres. Refer to **section 3.4.2 - Principles of robust design**.

NB The fire resistance and sound insulation performances are for imperforate partitions, walls and ceilings incorporating boards with all joints taped and filled, or skimmed according to British Gypsum's recommendations. The quoted performances are achieved only if British Gypsum components are used throughout, and the Company's fixing recommendations are strictly observed. Any variation in the specifications should be checked with British Gypsum.

NB Gypframe Deep Flange Floor & Ceiling Channel or Gypframe Extra Deep Flange Floor & Ceiling Channel should be used at base and at head (subject to deflection criteria).

Performance (▶ Refer to **section 3 - Basic principles of system design**)

EN

Table 2a – GypWall ROBUST 70mm Gypframe AcouStuds - double layer board linings
Solutions to satisfy the requirements of *BS EN 1364-1: 1999*

1

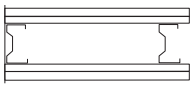

One inner layer and one outer layer of board each side of Gypframe 70 AS 50 AcouStuds at 600mm centres. Linings as in table.

2

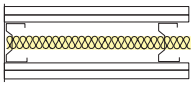

One inner layer and one outer layer of board each side of Gypframe 70 AS 50 AcouStuds at 600mm centres. 25mm Isover APR 1200 in the cavity. Linings as in table.

Detail	Partition thickness mm	Inner board type mm	Outer board type mm	Max. partition height[1] mm	Sound insulation R_w dB	Duty rating	Approx. weight kg/m²	System reference
60 minutes fire resistance EN								
1	127	SoundBloc (1 x 12.5)	DuraLine (1 x 15)	4700	53	Severe	51	Q606A062
2	127	SoundBloc (1 x 12.5)	DuraLine (1 x 15)	4000	58	Severe	52	Q606A063
90 minutes fire resistance EN								
1	132	SoundBloc (1 x 15)	DuraLine (1 x 15)	4000	54	Severe	55	Q606A064

[1] The maximum heights quoted are limited by the fire state field of application or by limiting deflection of L/240 at 200 Pa, whichever is the more onerous.

NB The fire resistance and sound insulation performances are for imperforate partitions, walls and ceilings incorporating boards with all joints taped and filled, or skimmed according to British Gypsum's recommendations. The quoted performances are achieved only if British Gypsum components are used throughout, and the Company's fixing recommendations are strictly observed. Any variation in the specifications should be checked with British Gypsum.

NB Gypframe Deep Flange Floor & Ceiling Channel or Gypframe Extra Deep Flange Floor & Ceiling Channel should be used at base and at head (subject to deflection criteria).

Table 2b – GypWall ROBUST 70mm Gypframe AcouStuds - double layer board linings
Solutions to satisfy the requirements of *BS 476: Part 22: 1987*

1

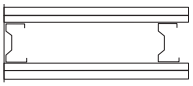

One inner layer and one outer layer of board each side of Gypframe 70 AS 50 AcouStuds at 600mm centres. Linings as in table.

2

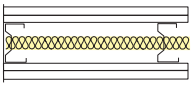

One inner layer and one outer layer of board each side of Gypframe 70 AS 50 AcouStuds at 600mm centres. 25mm Isover APR 1200 in the cavity. Linings as in table.

Detail	Partition thickness mm	Inner board type mm	Outer board type mm	Max. partition height[1] mm	Sound insulation R_w dB	Duty rating	Approx. weight kg/m²	System reference
60 minutes fire resistance BS								
1	127	SoundBloc (1 x 12.5)	DuraLine (1 x 15)	4700	53	Severe	51	Q606A062
2	127	SoundBloc (1 x 12.5)	DuraLine (1 x 15)	4700	58	Severe	52	Q606A063
90 minutes fire resistance BS								
1	132	SoundBloc (1 x 15)	DuraLine 15	5000	54	Severe	55	Q606A064

[1] Based on a limiting deflection of L/240 at 200 Pa. Greater heights can be achieved through the use of reduced stud centres. Refer to **section 3.4.2 - Principles of robust design**.

NB The fire resistance and sound insulation performances are for imperforate partitions, walls and ceilings incorporating boards with all joints taped and filled, or skimmed according to British Gypsum's recommendations. The quoted performances are achieved only if British Gypsum components are used throughout, and the Company's fixing recommendations are strictly observed. Any variation in the specifications should be checked with British Gypsum.

NB Gypframe Deep Flange Floor & Ceiling Channel or Gypframe Extra Deep Flange Floor & Ceiling Channel should be used at base and at head (subject to deflection criteria).

Performance (▶ Refer to **section 3 - Basic principles of system design**)

EN

Table 3a – GypWall ROBUST 92mm Gypframe 'C' Studs - single layer board linings
Solutions to satisfy the requirements of *BS EN 1364-1: 1999*

1

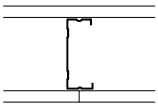

One layer of board each side of Gypframe 92 S 60 'C' Studs at 600mm centres. Linings as in table.

2

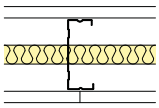

One layer of board each side of Gypframe 92 S 60 'C' Studs at 600mm centres. 25mm Isover APR 1200 in the cavity. Linings as in table.

3

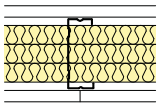

One layer of board each side of Gypframe 92 S 60 'C' Studs at 600mm centres. 3 x 25mm Isover APR 1200 in the cavity. Linings as in table.

Detail	Partition thickness mm	Board type	Lining thickness mm	Max. partition height[1] mm	Sound insulation R_w dB	Duty rating	Approx. weight kg/m²	System reference
60 minutes fire resistance EN								
1	124	DuraLine	1 x 15	4000	45	Severe	29	A206257
2	124	DuraLine	1 x 15	4000	48[2]	Severe	30	A206258
3	124	DuraLine	1 x 15	4000	52	Severe	30	Q606057

[1] The maximum heights quoted are limited by the fire state field of application or by limiting deflection of L/240 at 200 Pa, whichever is the more onerous.
[2] Increasing insulation to 50mm Isover APR 1200 will not improve this system performance.

NB The fire resistance and sound insulation performances are for imperforate partitions, walls and ceilings incorporating boards with all joints taped and filled, or skimmed according to British Gypsum's recommendations. The quoted performances are achieved only if British Gypsum components are used throughout, and the Company's fixing recommendations are strictly observed. Any variation in the specifications should be checked with British Gypsum.

NB Gypframe Deep Flange Floor & Ceiling Channel or Gypframe Extra Deep Flange Floor & Ceiling Channel should be used at base and at head (subject to deflection criteria).

Table 3b – GypWall ROBUST 92mm Gypframe 'C' Studs - single layer board linings
Solutions to satisfy the requirements of *BS 476: Part 22: 1987*

1

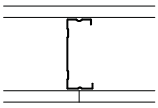

One layer of board each side of Gypframe 92 S 60 'C' Studs at 600mm centres. Linings as in table.

2

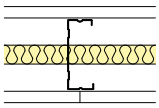

One layer of board each side of Gypframe 92 S 60 'C' Studs at 600mm centres. 25mm Isover APR 1200 in the cavity. Linings as in table.

3

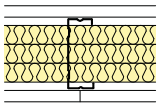

One layer of board each side of Gypframe 92 S 60 'C' Studs at 600mm centres. 3 x 25mm Isover APR 1200 in the cavity. Linings as in table.

Detail	Partition thickness mm	Board type	Lining thickness mm	Max. partition height[1] mm	Sound insulation R_w dB	Duty rating	Approx. weight kg/m²	System reference
60 minutes fire resistance BS								
1	124	DuraLine	1 x 15	4900	45	Severe	29	A206257
2	124	DuraLine	1 x 15	4900	48[2]	Severe	30	A206258
3	124	DuraLine	1 x 15	4900	52	Severe	30	Q606057

[1] Based on a limiting deflection of L/240 at 200 Pa. Greater heights can be achieved through the use of reduced stud centres. Refer to **section 3.4.2 - Principles of robust design**.
[2] Increasing insulation to 50mm Isover APR 1200 will not improve this system performance.

NB The fire resistance and sound insulation performances are for imperforate partitions, walls and ceilings incorporating boards with all joints taped and filled, or skimmed according to British Gypsum's recommendations. The quoted performances are achieved only if British Gypsum components are used throughout, and the Company's fixing recommendations are strictly observed. Any variation in the specifications should be checked with British Gypsum.

NB Gypframe Deep Flange Floor & Ceiling Channel or Gypframe Extra Deep Flange Floor & Ceiling Channel should be used at base and at head (subject to deflection criteria).

Performance (▶ Refer to **section 3 - Basic principles of system design**)

EN

Table 4a – GypWall ROBUST 92mm Gypframe AcouStuds - single layer board linings
Solutions to satisfy the requirements of *BS EN 1364-1: 1999*

1

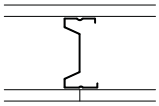

One layer of board each side of 92mm Gypframe AcouStuds at 600mm centres. Linings as in table.

2

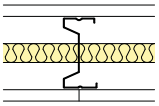

One layer of board each side of 92mm Gypframe AcouStuds at 600mm centres. 25mm Isover APR 1200 in the cavity. Linings as in table.

3

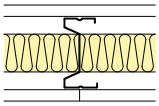

One layer of board each side of 92mm Gypframe AcouStuds at 600mm centres. 50mm Isover APR 1200 in the cavity. Linings as in table.

Detail	Partition thickness mm	Board type	Lining thickness mm	Max. partition height[1] mm	Sound insulation R_w dB	Duty rating	Approx. weight kg/m²	System reference
60 minutes fire resistance EN								
1	124	DuraLine	1 x 15	4000	45	Severe	29	A206A277
2	124	DuraLine	1 x 15	4000	50	Severe	30	A206A278
3	124	DuraLine	1 x 15	4000	52	Severe	30	A206A279

[1] The maximum heights quoted are limited by the fire state field of application or by limiting deflection of L/240 at 200 Pa, whichever is the more onerous.

NB The fire resistance and sound insulation performances are for imperforate partitions, walls and ceilings incorporating boards with all joints taped and filled, or skimmed according to British Gypsum's recommendations. The quoted performances are achieved only if British Gypsum components are used throughout, and the Company's fixing recommendations are strictly observed. Any variation in the specifications should be checked with British Gypsum.

NB Gypframe Deep Flange Floor & Ceiling Channel or Gypframe Extra Deep Flange Floor & Ceiling Channel should be used at base and at head (subject to deflection criteria).

Table 4b – GypWall ROBUST 92mm Gypframe AcouStuds - single layer board linings
Solutions to satisfy the requirements of *BS 476: Part 22: 1987*

1

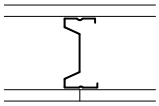

One layer of board each side of 92mm Gypframe AcouStuds at 600mm centres. Linings as in table.

2

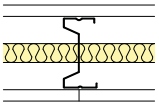

One layer of board each side of 92mm Gypframe AcouStuds at 600mm centres. 25mm Isover APR 1200 in the cavity. Linings as in table.

3

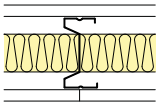

One layer of board each side of 92mm Gypframe AcouStuds at 600mm centres. 50mm Isover APR 1200 in the cavity. Linings as in table.

Detail	Partition thickness mm	Board type	Lining thickness mm	Max. partition height[1] mm	Sound insulation R_w dB	Duty rating	Approx. weight kg/m²	System reference
60 minutes fire resistance BS								
1	124	DuraLine	1 x 15	4900	45	Severe	29	A206A277
2	124	DuraLine	1 x 15	4900	50	Severe	30	A206A278
3	124	DuraLine	1 x 15	4900	52	Severe	30	A206A279

[1] Based on a limiting deflection of L/240 at 200 Pa. Greater heights can be achieved through the use of reduced stud centres. Refer to **section 3.4.2 - Principles of robust design**.

NB The fire resistance and sound insulation performances are for imperforate partitions, walls and ceilings incorporating boards with all joints taped and filled, or skimmed according to British Gypsum's recommendations. The quoted performances are achieved only if British Gypsum components are used throughout, and the Company's fixing recommendations are strictly observed. Any variation in the specifications should be checked with British Gypsum.

NB Gypframe Deep Flange Floor & Ceiling Channel or Gypframe Extra Deep Flange Floor & Ceiling Channel should be used at base and at head (subject to deflection criteria).

Performance (▶ Refer to **section 3 - Basic principles of system design**)

EN

Table 5a – GypWall ROBUST 70mm Gypframe 'I' Studs - single layer board linings
Solutions to satisfy the requirements of *BS EN 1364-1: 1999*

1

One layer of board each side of Gypframe 70 I 50 'I' Studs at 600mm centres. Linings as in table.

2

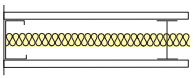

One layer of board each side of Gypframe 70 I 50 'I' Studs at 600mm centres. 25mm Isover APR 1200 in the cavity. Linings as in table.

3

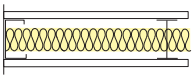

One layer of board each side of Gypframe 70 I 50 'I' Studs at 600mm centres. 50mm Isover APR 1200 in the cavity. Linings as in table.

4

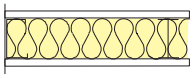

One layer of board each side of Gypframe 70 I 50 'I' Studs at 600mm centres. 80mm Isover Modular Roll in the cavity. Linings as in table.

Detail	Partition thickness mm	Board type	Lining thickness mm	Max. partition height[1] mm	Sound insulation R_w dB	Duty rating	Approx. weight kg/m²	System reference
60 minutes fire resistance EN								
1	102	DuraLine	1 x 15	4200	42	Severe	29	Q606049
2	102	DuraLine	1 x 15	4200	47	Severe	29	Q606050
3	102	DuraLine	1 x 15	4200	48	Severe	29	Q606051
4	102	DuraLine	1 x 15	4200	50	Severe	29	Q606052

[1] The maximum heights quoted are limited by the fire state field of application or by limiting deflection of L/240 at 200 Pa, whichever is the more onerous.

NB The fire resistance and sound insulation performances are for imperforate partitions, walls and ceilings incorporating boards with all joints taped and filled, or skimmed according to British Gypsum's recommendations. The quoted performances are achieved only if British Gypsum components are used throughout, and the Company's fixing recommendations are strictly observed. Any variation in the specifications should be checked with British Gypsum.

NB Gypframe Deep Flange Floor & Ceiling Channel or Gypframe Extra Deep Flange Floor & Ceiling Channel should be used at base and at head (subject to deflection criteria).

Table 5b – GypWall ROBUST 70mm Gypframe 'I' Studs - single layer board linings
Solutions to satisfy the requirements of *BS 476: Part 22: 1987*

1

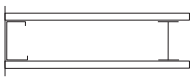

One layer of board each side of Gypframe 70 I 50 'I' Studs at 600mm centres. Linings as in table.

2

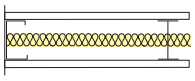

One layer of board each side of Gypframe 70 I 50 'I' Studs at 600mm centres. 25mm Isover APR 1200 in the cavity. Linings as in table.

3

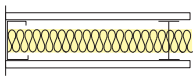

One layer of board each side of Gypframe 70 I 50 'I' Studs at 600mm centres. 50mm Isover APR 1200 in the cavity. Linings as in table.

4

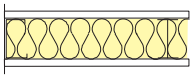

One layer of board each side of Gypframe 70 I 50 'I' Studs at 600mm centres. 80mm Isover Modular Roll in the cavity. Linings as in table.

Detail	Partition thickness mm	Board type	Lining thickness mm	Max. partition height[1] mm	Sound insulation R_w dB	Duty rating	Approx. weight kg/m²	System reference
60 minutes fire resistance BS								
1	102	DuraLine	1 x 15	4300	42	Severe	29	Q606049
2	102	DuraLine	1 x 15	4300	47	Severe	29	Q606050
3	102	DuraLine	1 x 15	4300	48	Severe	29	Q606051
4	102	DuraLine	1 x 15	4300	50	Severe	29	Q606052

[1] Based on a limiting deflection of L/240 at 200 Pa. Greater heights can be achieved through the use of reduced stud centres. Refer to **section 3.4.2 - Principles of robust design**.

NB The fire resistance and sound insulation performances are for imperforate partitions, walls and ceilings incorporating boards with all joints taped and filled, or skimmed according to British Gypsum's recommendations. The quoted performances are achieved only if British Gypsum components are used throughout, and the Company's fixing recommendations are strictly observed. Any variation in the specifications should be checked with British Gypsum.

NB Gypframe Deep Flange Floor & Ceiling Channel or Gypframe Extra Deep Flange Floor & Ceiling Channel should be used at base and at head (subject to deflection criteria).

Design

Services
The position of services and heavy fixtures should be pre-determined and their installation planned into the frame erection stage. If a plastered finish is specified, the thickness of the door or glazing frame must allow for the thickness of the plaster finish. Timber sole plates should be considered where the floor is uneven.
▶ Refer to **section 3.5 – Service installations.**

Cavity fire barriers
Minimum 12.5mm Gyproc plasterboard screw-fixed into the web of perimeter channels or vertical studs will provide a satisfactory closure to flame or smoke.
▶ Refer to **section 10 – Cavity fire barriers.**

Independent support
When designing for the installation of services such as fire dampers and associated ductwork through a **GypWall** partition, consideration should be given to the size and weight of the damper - this will determine whether it can be supported directly from the partition or needs to be independently supported from the structure.
▶ Refer to **section 3.5 – Service installations.**

Electrical
The installation of electrical services should be carried out in accordance with *BS 7671*. The cut-outs in the studs can be used for routing electrical and other small services (see **GypWall CLASSIC Construction details – 1**). Switch boxes and socket outlets can be supported from Gypframe 99 FC 50 or 150 FC 90 Fixing Channels fixed horizontally between studs, or a high performance socket box detail where higher acoustic performance is required.

Where Gypframe AcouStuds are used, services are routed through 50mm x 28mm 'H' shaped push-outs, at the same centres as shown in **GypWall CLASSIC Construction details – 1a** for conventional cut-outs. Cables should be protected by conduit, or other suitable precautions taken to prevent abrasion when they pass through the metal frame.

Fixing floor and ceiling channels
Gypframe Floor & Ceiling Channels must be securely fixed with a row of fixings at 600mm maximum centres. For 94mm channels and above, two rows of staggered fixings are required, each row at 600mm centres and each fixing 25mm in from the flange. If the floor is uneven, a 38mm thick timber sole plate equal to the width of the channel should be used.

If the concrete or screeded floor is new, consideration should be given to the installation of a damp-proof membrane between the floor surface and the channel or sole plate.

Door openings
The designer should consider the thickness tolerances of the partition types in relation to the proposed door frame detail. To satisfy *BS 5234: Part 2* requirements for Heavy and Severe Duty partitions, door framing should be specified as shown in **Construction details – 6 - 7**. The door manufacturer should also be consulted in relation to the door detail.

Control joints
Control joints may be required in the partition to relieve stresses induced by expansion and contraction of the structure. They should coincide with movement joints within the surrounding structure.

Deflection heads
Partition head deflection designs may be necessary to accommodate deflections in the supporting floor. Deflection heads may also be required to the underside of roof structures subjected to positive and negative pressures.

For special detailing that minimises the loss of acoustic performance:
▶ Refer to **section 3.2.2 – Principles of building acoustics**.

For deflection head design:
▶ Refer to **section 6 – Partition and wall systems, GypWall CLASSIC Construction details.**

Access for maintenance
Gyproc Profilex Access Panels are available to provide access for maintenance. Access panels must be fully compatible with drywall construction and match the fire rating of the partition.

Fixtures
Lightweight fixtures can be made directly to the partition linings. Medium weight fixtures can be made to Gypframe 99 FC 50 Fixing Channel. Heavyweight fixtures (to *BS 5234*), such as wash basins and wall cupboards, can be fixed using Gypframe 150 FC 90 Fixing Channel.
▶ Refer to **section 3.5.2 – Service penetrations and fixing into drywall systems**.

Board finishing
For increased resistance to accidental surface damage, the use of Thistle Durafinish is recommended.
▶ Refer to **section 13 – Finishing systems and decorative effects.**

For more information refer to the British Gypsum **SITE** BOOK, available to download from www.british-gypsum.com

▶ Please refer to **section 3 - Basic principles of system design** for general guidance

Construction details

1 Head

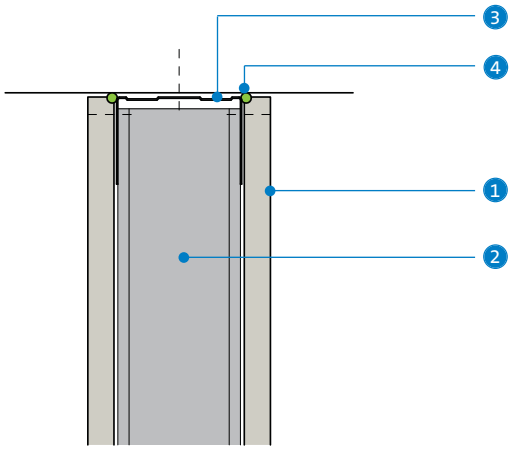

2 Base

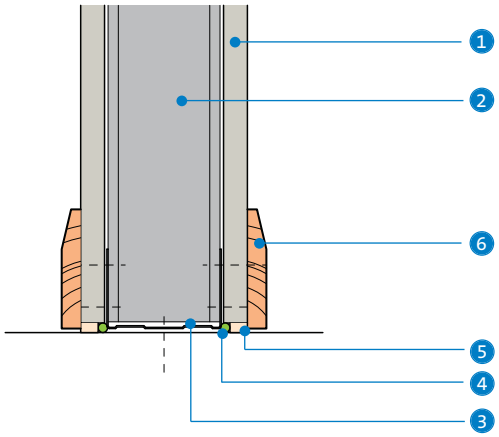

3 Junction with masonry and stop end

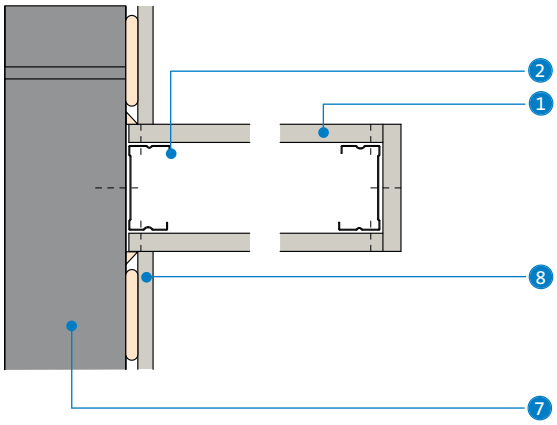

4 Internal / external corner

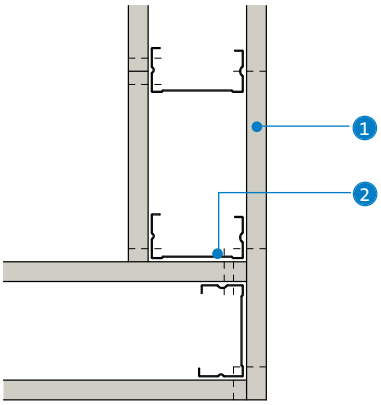

5 'T' junction

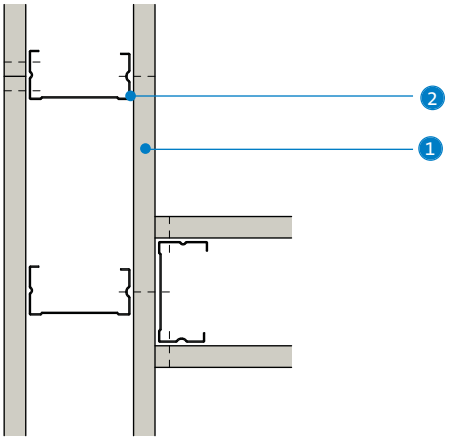

1. Gyproc DuraLine
2. Gypframe 'C' Stud
3. Gypframe Deep Flange Floor & Ceiling Channel
4. Gyproc Sealant
5. Bulk fill with Gyproc jointing materials (where gap exceeds 5mm)
6. Skirting
7. Internal blockwork
8. **DriLyner BASIC** wall lining system

Construction details

6 Door frame to satisfy *BS 5234: Parts 1 & 2: 1992 - Heavy and Severe Duty*

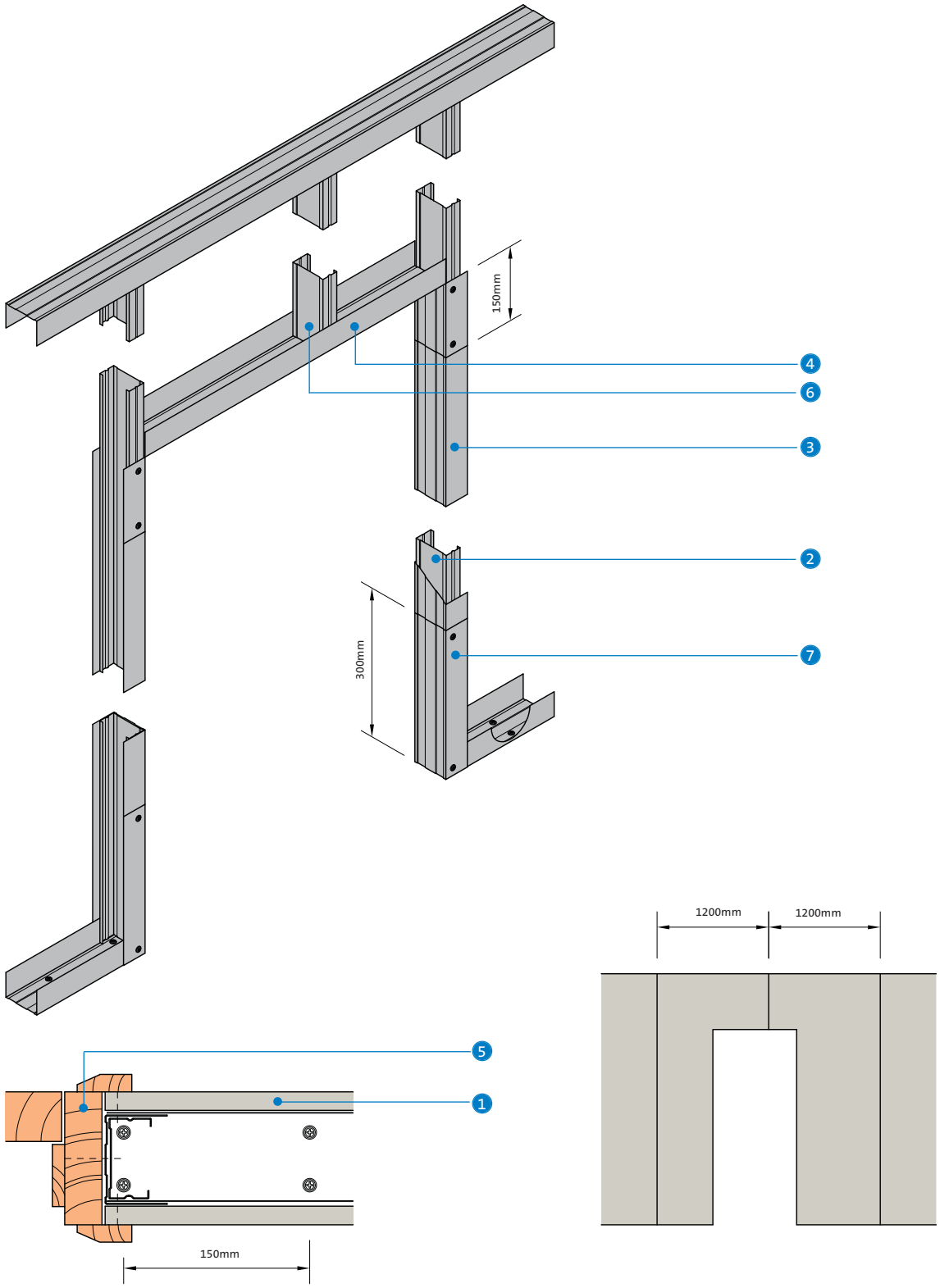

1. Gyproc DuraLine
2. Gypframe 'C' Stud
3. Gypframe Deep Flange Floor & Ceiling Channel to sleeve studs
4. Gypframe Deep Flange Floor & Ceiling Channel cut and bent to form door head
5. Timber door frame and architrave
6. Gypframe 'C' Stud to maintain stud module
7. Gypframe Deep Flange Floor & Ceiling Channel cut and bent to extend up studs

NB Advice should be sought from the door manufacturer prior to the construction of these details.

NB At the base, the channel is cut and bent to extend 300mm up the studs and fixed each side with two Gyproc Wafer Head Drywall Screws. The studs each side of the opening are sleeved full height of opening with Gypframe Deep Flange Floor & Ceiling Channel.

Construction details

7 Alternative door frame to satisfy *BS 5324: Parts 1 & 2: 1992 - Heavy and Severe Duty*

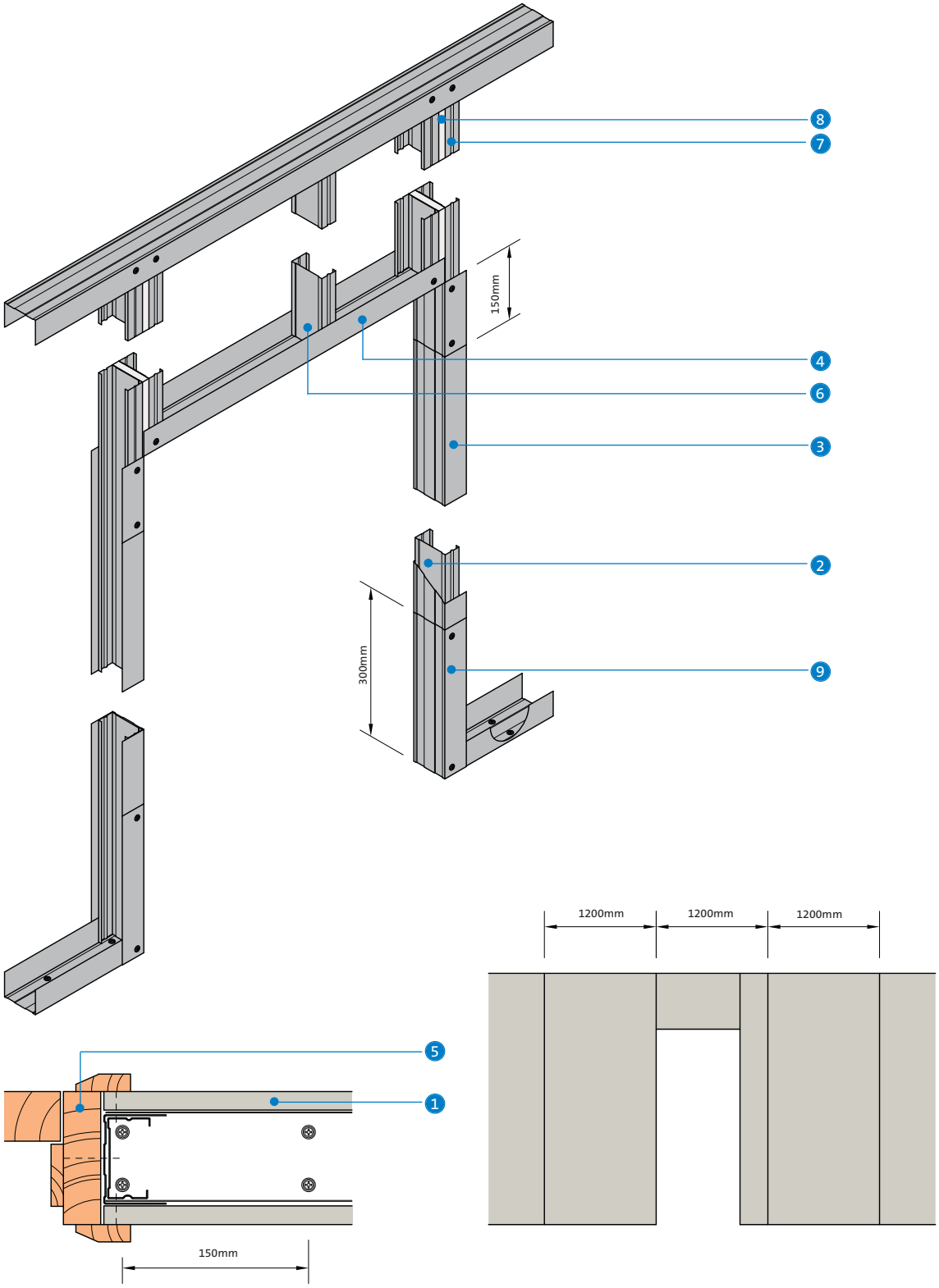

1. Gyproc DuraLine
2. Gypframe 'C' Stud
3. Gypframe Deep Flange Floor & Ceiling Channel to sleeve studs
4. Gypframe Deep Flange Floor & Ceiling Channel cut and bent to form door head
5. Timber door frame and architrave
6. Gypframe 'C' Stud to maintain stud module
7. Gypframe 'C' Studs fixed back to back with Gyproc Drywall Screws at 300mm centres staggered
8. Plasterboard infill (same type as lining) cut to fit between studs
9. Gypframe Deep Flange Floor & Ceiling Channel cut and bent to extend up studs

NB Advice should be sought from the door manufacturer prior to the construction of these details.

NB At the base, the channel is cut and bent to extend 300mm up the studs and fixed each side with two Gyproc Wafer Head Drywall Screws. The studs each side of the opening are sleeved full height of opening with Gypframe Deep Flange Floor & Ceiling Channel.

NB The principle of this reduced plasterboard waste door detail is only suitable for **GypWall CLASSIC**, **GypWall ROBUST** and **GypWall EXTREME** for fixed head situations only.

GypWall EXTREME

Ultimate impact and abrasion resistant partition system

This section includes updated information, added since it was first published in July 2009. Please see the WHITE BOOK update document for details.
Last updated 05/07/2010

Southwell Minster School,
Nottinghamshire

GypWall EXTREME

44 – 62 R_w dB

30 – 60 mins

GypWall EXTREME is British Gypsum's ultimate impact resistant partition for use where extra durability is required above and beyond Severe Duty. GypWall EXTREME is able to cope with the rigours of intensive high traffic use in commercial applications.

GypWall EXTREME combines Gyproc plasterboards, Gypframe metal products and Rigidur H advanced fibre reinforced gypsum board to create a lightweight, cost-effective solution both in terms of construction and lifetime costs. GypWall EXTREME is fully adaptable and compatible with other British Gypsum systems.

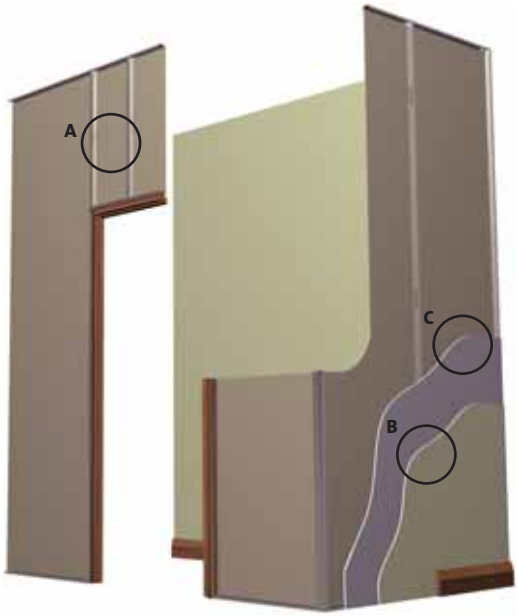

A Gypframe AcouStud

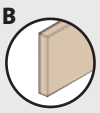
B Rigidur H

C Gyproc SoundBloc

Key facts

- Tested beyond the performance requirements of *BS 5234* Severe Duty[1] rating
- Capable of securing heavy fixtures on a single layer without the need for additional patressing
- Extremely durable and resilient linings
- Excellent resistance to vandalism
- Reduces maintenance cycle costs
- Excellent acoustic performance - achieves up to R_w 52 dB in single layer system on standard Gypframe 'C' Studs
- Extremely cost effective system compared to other fibre board offerings due to hybrid construction

[1] Refer to **section 3.4.2 - Principles of robust design**.

Applications

Intensively used applications, for example high traffic and unsupervised corridors, mental health partitioning, student accommodation.

Sector

- ✓ Sport and leisure
- ✓ Education
- ✓ Healthcare
- ✓ Industrial
- ✓ Custodial
- ✓ High-rise multi-occupancy

System components

Gypframe metal products

70 S 60 'C' Stud — **Length** 3600, 4200mm

146 S 50 'C' Stud (for door details) — **Length** 3000, 3600, 4200mm

70 AS 50 AcouStud — **Length** 2400, 2700, 3000mm 3600, 4200mm

146 AS 50 AcouStud — **Length** 3600mm

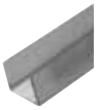

Deep Flange Floor & Ceiling Channel
72 DC 60, 148 DC 60
Extra Deep Flange Floor & Ceiling Channel
72 EDC 80, 148 EDC 80
All channels are available in 3600mm only.

99 FC 50 Fixing Channel — **Length** 2400mm

150 FC 90 Fixing Channel — **Length** 1197mm

GFS1 Fixing Strap — **Length** 2400mm

or

GFT1 Fixing 'T' — **Length** 2400mm

Board products

Gyproc WallBoard[1]
Thickness 15mm
Width 1200mm

Gyproc SoundBloc[1]
Thickness 12.5, 15mm
Width 1200mm

Gyproc DuraLine[1 2]
Thickness 15mm
Width 1200mm

Rigidur H
Thickness 12.5, 15mm
Width 1200mm

[1] Gyproc moisture resistant grades are specified in intermittent wet use areas, e.g. shower cubicles.
[2] For use in **GypWall EXTREME / ROBUST** hybrid, see pages 128 and 129.

Fixing and finishing products

Gyproc Wafer Head Drywall Screws
For Gypframe metal-to-metal fixing less than 0.8mm thick ('I' studs less than 0.6mm thick).

Gyproc Drywall Screws
For fixing boards to Gypframe metal framing less than 0.8mm thick ('I' studs less than 0.6mm thick).

Rigidur Screws
For fixing Rigidur H to Gypframe metal.

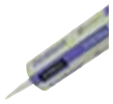

Gyproc Sealant
Sealing air paths for optimum sound insulation.

Gyproc jointing materials
For seamless jointing.

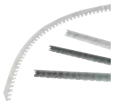

Gyproc edge and angle beads
Protecting and enhancing board edges and corners.

Gyproc Control Joint
To accommodate structural movement.

Gyproc FireStrip
For fire-stopping deflection heads.

Thistle Board Finish or Thistle Multi-Finish
To provide a plaster skim finish.

or

Thistle Durafinish
To provide improved resistance to accidental damage.

Insulation products

Isover APR 1200
25mm and 50mm, for improved acoustic performance.

Isover ULTIMATE Piano Plus
60mm, for improved acoustic performance and fire insulation.

Installation overview

Gypframe Deep Flange Floor & Ceiling Channel is fixed to the floor and soffit. Gypframe studs are fitted vertically to a friction-fit at 600mm centres within the channel sections, and to abutments, to form the framework. This allows for adjustment during boarding. Gypframe 'C' Studs or Gypframe AcouStuds are fitted so as to all face the same way. Additional framing is installed as required to support heavy fixtures.

Board fixing

In single layer systems, Rigidur H is fixed using either 30mm or 40mm Rigidur Screws at 300mm centres around the perimeter of the board, and at the intermediate stud positions, at least 13mm from the edge of the board.

For double layer systems the inner layers of Gyproc plasterboards should be fixed with 25mm Gyproc Drywall Screws around the perimeter of the board at 300mm centres, and at the intermediate stud at 600mm centres.

The outer layer of Rigidur H is fixed using 40mm Rigidur Screws at 300mm centres around the perimeter of the board, and at the intermediate stud positions, at least 13mm from the edge of the board. For all double layer / hybrid specifications Rigidur H is always fixed as the outer layer on the double layer side(s). When using Rigidur H, always fix from the bottom of the partition upwards, as per guidance set out in the **SITE** BOOK, available to download from www.british-gypsum.com

Services

Electrical and other services are normally installed after one side is boarded. Horizontal runs are routed through cut-outs in the studs. Gypframe 99 FC 50 Fixing Channel can be installed between studs to support recessed switch boxes / socket outlets.

For more information regarding handling, fixing and finishing of Rigidur H, see the Product Data Sheet '**Rigidur H for commercial applications**' and the **SITE** BOOK, available to download from www.british-gypsum.com

For full installation details, refer to the British Gypsum **SITE BOOK**, available to download from www.british-gypsum.com

Performance (▶ Refer to **section 3 - Basic principles of system design**)

EN

Table 1a – GypWall EXTREME 70mm Gypframe 'C' Stud and Gypframe AcouStud Solutions to satisfy the requirements of *BS EN 1364-1: 1999*

1

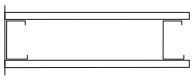

One layer of board each side of Gypframe 70 S 60 'C' Studs at 600mm centres. Linings as in table.

2

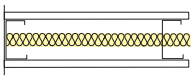

One layer of board each side of Gypframe 70 S 60 'C' Studs at 600mm centres. 25mm Isover APR 1200 in the cavity. Linings as in table.

3

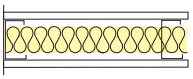

One layer of board each side of Gypframe 70 S 60 'C' Studs at 600mm centres. 50mm Isover APR 1200 in the cavity. Linings as in table.

4

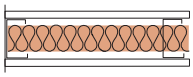

One layer of board each side of Gypframe 70 S 60 'C' Studs at 600mm centres. 60mm Isover ULTIMATE Piano Plus in the cavity. Linings as in table.

5

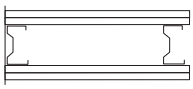

Two layers of board each side of Gypframe 70 AS 50 AcouStuds at 600mm centres. Linings as in table.

6

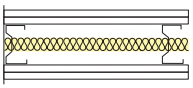

Two layers of board each side of Gypframe 70 AS 50 AcouStuds at 600mm centres. 25mm Isover APR 1200 in the cavity. Linings as in table.

Detail	Partition thickness mm	Inner board type mm	Outer board type mm	Max. partition height[1] mm	Sound insulation R_w dB	Duty rating	Approx. weight kg/m²	System reference
30 minutes fire resistance EN								
1	97	Rigidur H 12.5	-	3800	44	Severe[2]	30	X606009
2	97	Rigidur H 12.5	-	3800	47	Severe[2]	30	X606010
3	97	Rigidur H 12.5	-	3800	49	Severe[2]	30	X606011
1	102	Rigidur H 15	-	4000	45	Severe[2]	36	X606001
2	102	Rigidur H 15	-	4000	51	Severe[2]	36	X606002
3	102	Rigidur H 15	-	4000	52	Severe[2]	36	X606003
60 minutes fire resistance EN								
4	97	Rigidur H 12.5	-	3800	49	Severe[2]	30	X606012
4	102	Rigidur H 15	-	4000	51	Severe[2]	36	X606004
5	122	SoundBloc 12.5	Rigidur H 12.5	4000	54	Severe[2]	52	X606A006
5	127	WallBoard 15	Rigidur H 12.5	4000	54	Severe[2]	52	X606A005
6	127	SoundBloc 15	Rigidur H 12.5	4000	58	Severe[2]	56	X606A007

[1] The maximum heights quoted are limited by the fire state field of application or by limiting deflection of L/240 at 200 Pa, whichever is the more onerous.
[2] The resistance to impact of Rigidur H is higher than the most severe criteria set out in *BS 5234*. British Gypsum has conducted a number of additional structural performance and durability tests beyond Severe Duty to better reflect actual use in high traffic areas. Contact the British Gypsum Drywall Academy for more information.

NB The fire resistance and sound insulation performances are for imperforate partitions, walls and ceilings incorporating boards with all joints taped and filled, or skimmed according to British Gypsum's recommendations. The quoted performances are achieved only if British Gypsum components are used throughout, and the Company's fixing recommendations are strictly observed. Any variation in the specifications should be checked with British Gypsum.

NB Gypframe Deep Flange Floor & Ceiling Channel or Gypframe Extra Deep Flange Floor & Ceiling Channel should be used at base and at head (subject to deflection criteria).

Table 1b – GypWall EXTREME 70mm Gypframe 'C' Stud and Gypframe AcouStud Solutions to satisfy the requirements of *BS 476: Part 22: 1987*

1

One layer of board each side of Gypframe 70 S 60 'C' Studs at 600mm centres. Linings as in table.

2

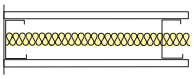

One layer of board each side of Gypframe 70 S 60 'C' Studs at 600mm centres. 25mm Isover APR 1200 in the cavity. Linings as in table.

3

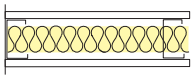

One layer of board each side of Gypframe 70 S 60 'C' Studs at 600mm centres. 50mm Isover APR 1200 in the cavity. Linings as in table.

4

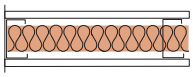

One layer of board each side of Gypframe 70 S 60 'C' Studs at 600mm centres. 60mm Isover ULTIMATE Piano Plus in the cavity. Linings as in table.

5

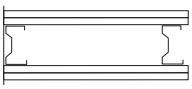

Two layers of board each side of Gypframe 70 AS 50 AcouStuds at 600mm centres. Linings as in table.

6

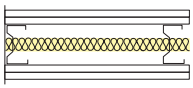

Two layers of board each side of Gypframe 70 AS 50 AcouStuds at 600mm centres. 25mm Isover APR 1200 in the cavity. Linings as in table.

Detail	Partition thickness mm	Inner board type mm	Outer board type mm	Max. partition height[1] mm	Sound insulation R_w dB	Duty rating	Approx. weight kg/m²	System reference
30 minutes fire resistance BS								
1	97	Rigidur H 12.5	-	3800	44	Severe[2]	30	X606009
2	97	Rigidur H 12.5	-	3800	47	Severe[2]	30	X606010
3	97	Rigidur H 12.5	-	3800	49	Severe[2]	30	X606011
1	102	Rigidur H 15	-	4000	45	Severe[2]	36	X606001
2	102	Rigidur H 15	-	4000	51	Severe[2]	36	X606002
3	102	Rigidur H 15	-	4000	52	Severe[2]	36	X606003
60 minutes fire resistance BS								
4	97	Rigidur H 12.5	-	3800	49	Severe[2]	30	X606012
4	102	Rigidur H 15	-	4000	51	Severe[2]	36	X606004
5	122	SoundBloc 12.5	Rigidur H 12.5	4700	54	Severe[2]	52	X606A006
5	127	WallBoard 15	Rigidur H 12.5	4700	54	Severe[2]	52	X606A005
6	127	SoundBloc 15	Rigidur H 12.5	4700	58	Severe[2]	56	X606A007

[1] Based on a limiting deflection of L/240 at 200 Pa.
[2] The resistance to impact of Rigidur H is higher than the most severe criteria set out in *BS 5234*. British Gypsum has conducted a number of additional structural performance and durability tests beyond Severe Duty to better reflect actual use in high traffic areas. Contact the British Gypsum Drywall Academy for more information.

NB The fire resistance and sound insulation performances are for imperforate partitions, walls and ceilings incorporating boards with all joints taped and filled, or skimmed according to British Gypsum's recommendations. The quoted performances are achieved only if British Gypsum components are used throughout, and the Company's fixing recommendations are strictly observed. Any variation in the specifications should be checked with British Gypsum.

NB Gypframe Deep Flange Floor & Ceiling Channel or Gypframe Extra Deep Flange Floor & Ceiling Channel should be used at base and at head (subject to deflection criteria).

Performance (▶ Refer to **section 3 - Basic principles of system design**)

EN

Table 2a – GypWall EXTREME 146mm Gypframe AcouStud
Solutions to satisfy the requirements of *BS EN 1364-1: 1999*

1

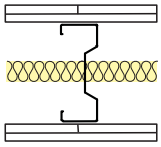

Two layers of board each side of Gypframe 146 AS 50 AcouStuds at 600mm centres. 25mm Isover APR 1200 in the cavity. Linings as in table.

2

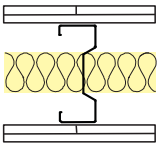

Two layers of board each side of Gypframe 146 AS 50 AcouStuds at 600mm centres. 50mm Isover APR 1200 in the cavity. Linings as in table.

Detail	Partition thickness mm	Inner board type mm	Outer board type mm	Max. partition height[1] mm	Sound insulation R_w (R_w + Ctr) dB	Duty rating	Approx. weight kg/m²	System reference
60 minutes fire resistance EN								
1	203	SoundBloc 15	Rigidur H 12.5	4000	60 (57)	Severe[2]	56	X606A013
2	203	SoundBloc 15	Rigidur H 12.5	4000	62 (59)	Severe[2]	56	X606A014

[1] The maximum heights quoted are limited by the fire state field of application or by limiting deflection of L/240 at 200 Pa, whichever is the more onerous.
[2] The resistance to impact of Rigidur H is higher than the most severe criteria set out in *BS 5234*. British Gypsum has conducted a number of additional structural performance and durability tests beyond Severe Duty to better reflect actual use in high traffic areas. Contact the British Gypsum Drywall Academy for more information.

NB The fire resistance and sound insulation performances are for imperforate partitions, walls and ceilings incorporating boards with all joints taped and filled, or skimmed according to British Gypsum's recommendations. The quoted performances are achieved only if British Gypsum components are used throughout, and the Company's fixing recommendations are strictly observed. Any variation in the specifications should be checked with British Gypsum.

NB Gypframe Deep Flange Floor & Ceiling Channel or Gypframe Extra Deep Flange Floor & Ceiling Channel should be used at base and at head (subject to deflection criteria).

Table 2b – GypWall EXTREME 146mm Gypframe AcouStud
Solutions to satisfy the requirements of *BS 476: Part 22: 1987*

1

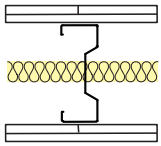

Two layers of board each side of Gypframe 146 AS 50 AcouStuds at 600mm centres. 25mm Isover APR 1200 in the cavity. Linings as in table.

2

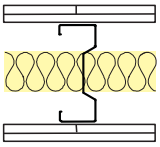

Two layers of board each side of Gypframe 146 AS 50 AcouStuds at 600mm centres. 50mm Isover APR 1200 in the cavity. Linings as in table.

Detail	Partition thickness mm	Board type	Lining thickness mm	Max. partition height[1] mm	Sound insulation R_w (R_w + Ctr) dB	Duty rating	Approx. weight kg/m²	System reference
60 minutes fire resistance BS								
1	203	SoundBloc + Rigidur H	15 + 12.5	7800	60 (57)	Severe[2]	56	X606A013
2	203	SoundBloc + Rigidur H	15 + 12.5	7800	62 (59)	Severe[2]	56	X606A014

[1] Based on a limiting deflection of L/240 at 200 Pa.
[2] The resistance to impact of Rigidur H is higher than the most severe criteria set out in *BS 5234*. British Gypsum has conducted a number of additional structural performance and durability tests beyond Severe Duty to better reflect actual use in high traffic areas. Contact the British Gypsum Drywall Academy for more information.

NB The fire resistance and sound insulation performances are for imperforate partitions, walls and ceilings incorporating boards with all joints taped and filled, or skimmed according to British Gypsum's recommendations. The quoted performances are achieved only if British Gypsum components are used throughout, and the Company's fixing recommendations are strictly observed. Any variation in the specifications should be checked with British Gypsum.

NB Gypframe Deep Flange Floor & Ceiling Channel or Gypframe Extra Deep Flange Floor & Ceiling Channel should be used at base and at head (subject to deflection criteria).

Performance

A number of hybrid specifications combining **GypWall EXTREME** and **GypWall ROBUST** have been developed to optimise the benefits of the two systems.

EN

Table 3a – GypWall EXTREME 70mm Gypframe 'C' Stud and Gypframe AcouStud Solutions to satisfy the requirements of *BS EN 1364-1: 1999*

SPECSURE LIFETIME SYSTEM WARRANTY

1

One layer of board each side of Gypframe 70 S 60 'C' Studs at 600mm centres. Linings as in table.

2

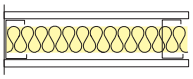

One layer of board each side of Gypframe 70 S 60 'C' Studs at 600mm centres. 50mm Isover APR 1200 in the cavity. Linings as in table.

3

One layer of board to side 1 and two layers of board to side 2 of Gypframe 70 AS 50 AcouStuds at 600mm centres. Linings as in table.

4

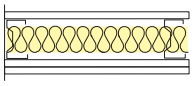

One layer of board to side 1 and two layers of board to side 2 of Gypframe 70 AS 50 AcouStuds at 600mm centres. 50mm Isover APR 1200 in the cavity. Linings as in table.

Detail	Partition thickness mm	Board type and thickness side 1	Board type and thickness side 2	Max. partition height[1] mm	Sound insulation R_w dB	Duty rating	Approx. weight kg/m²	System reference
30 minutes fire resistance EN								
1	102	DuraLine 15mm	Rigidur H 15mm	4000	45	Severe[2]	33	X606017
2	102	DuraLine 15mm	Rigidur H 15mm	4000	50	Severe[2]	33	X606018
3	115	DuraLine 15mm	WallBoard 15mm + Rigidur H 12.5mm	4200	47	Severe[2]	40	X606A019
3	115	DuraLine 15mm	SoundBloc 15mm + Rigidur H 12.5mm	4200	49	Severe[2]	44	X606A021
4	115	DuraLine 15mm	WallBoard 15mm + Rigidur H 12.5mm	4200	52	Severe[2]	40	X606A020
4	115	DuraLine 15mm	SoundBloc 15mm + Rigidur H 12.5mm	4200	55	Severe[2]	44	X606A022
60 minutes fire resistance EN								
3	115	DuraLine 15mm	DuraLine 15mm + Rigidur H 12.5mm	4200	50	Severe[2]	44	X606A023
4	115	DuraLine 15mm	DuraLine 15mm + Rigidur H 12.5mm	4200	56	Severe[2]	44	X606A024

[1] The maximum heights quoted are limited by the fire state field of application or by limiting deflection of L/240 at 200 Pa, whichever is the more onerous.
[2] The resistance to impact of Rigidur H is higher than the most severe criteria set out in *BS 5234*. British Gypsum has conducted a number of additional structural performance and durability tests beyond Severe Duty to better reflect actual use in high traffic areas. Contact the British Gypsum Drywall Academy for more information.

NB The fire resistance and sound insulation performances are for imperforate partitions, walls and ceilings incorporating boards with all joints taped and filled, or skimmed according to British Gypsum's recommendations. The quoted performances are achieved only if British Gypsum components are used throughout, and the Company's fixing recommendations are strictly observed. Any variation in the specifications should be checked with British Gypsum.

NB Gypframe Deep Flange Floor & Ceiling Channel or Gypframe Extra Deep Flange Floor & Ceiling Channel should be used at base and at head (subject to deflection criteria).

Performance

A number of hybrid specifications combining **GypWall EXTREME** and **GypWall ROBUST** have been developed to optimise the benefits of the two systems.

BS

Table 3b – GypWall EXTREME 70mm Gypframe 'C' Stud and Gypframe AcouStud Solutions to satisfy the requirements of *BS 476: Part 22: 1987*

1

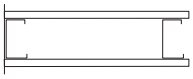

One layer of board each side of Gypframe 70 S 60 'C' Studs at 600mm centres. Linings as in table.

2

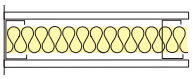

One layer of board each side of Gypframe 70 S 60 'C' Studs at 600mm centres. 50mm Isover APR 1200 in the cavity. Linings as in table.

3

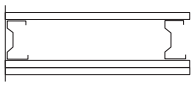

One layer of board to side 1 and two layers of board to side 2 of Gypframe 70 AS 50 AcouStuds at 600mm centres. Linings as in table.

4

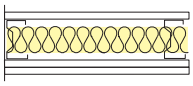

One layer of board to side 1 and two layers of board to side 2 of Gypframe 70 AS 50 AcouStuds at 600mm centres. 50mm Isover APR 1200 in the cavity. Linings as in table.

Detail	Partition thickness mm	Board type and thickness side 1	Board type and thickness side 2	Max. partition height[1] mm	Sound insulation R_w dB	Duty rating	Approx. weight kg/m²	System reference
30 minutes fire resistance BS								
1	102	DuraLine 15mm	Rigidur H 15mm	4000	45	Severe[2]	33	X606017
2	102	DuraLine 15mm	Rigidur H 15mm	4000	50	Severe[2]	33	X606018
3	115	DuraLine 15mm	WallBoard 15mm + Rigidur H 12.5mm	4200	47	Severe[2]	40	X606A019
3	115	DuraLine 15mm	SoundBloc 15mm + Rigidur H 12.5mm	4200	49	Severe[2]	44	X606A021
4	115	DuraLine 15mm	WallBoard 15mm + Rigidur H 12.5mm	4200	52	Severe[2]	40	X606A020
4	115	DuraLine 15mm	SoundBloc 15mm + Rigidur H 12.5mm	4200	55	Severe[2]	44	X606A022
60 minutes fire resistance BS								
3	115	DuraLine 15mm	DuraLine 15mm + Rigidur H 12.5mm	4200	50	Severe[2]	44	X606A023
4	115	DuraLine 15mm	DuraLine 15mm + Rigidur H 12.5mm	4200	56	Severe[2]	44	X606A024

[1] Based on a limiting deflection of L/240 at 200 Pa.
[2] The resistance to impact of Rigidur H is higher than the most severe criteria set out in *BS 5234*. British Gypsum has conducted a number of additional structural performance and durability tests beyond Severe Duty to better reflect actual use in high traffic areas. Contact the British Gypsum Drywall Academy for more information.

NB The fire resistance and sound insulation performances are for imperforate partitions, walls and ceilings incorporating boards with all joints taped and filled, or skimmed according to British Gypsum's recommendations. The quoted performances are achieved only if British Gypsum components are used throughout, and the Company's fixing recommendations are strictly observed. Any variation in the specifications should be checked with British Gypsum.

NB Gypframe Deep Flange Floor & Ceiling Channel or Gypframe Extra Deep Flange Floor & Ceiling Channel should be used at base and at head (subject to deflection criteria).

Design

Services
The position of services and heavy fixtures should be pre-determined and their installation planned into the frame erection stage. If a plastered finish is specified, the thickness of the door or glazing frame must allow for the thickness of the plaster finish.
▶ Refer to **section 3.5 – Service installations.**

Cavity fire barriers
Minimum 12.5mm Gyproc plasterboard screw-fixed into the web of perimeter channels or vertical studs will provide a satisfactory closure to flame or smoke.
▶ Refer to **section 10 – Cavity fire barriers.**

Independent support
When designing for the installation of services such as fire dampers and associated ductwork through a **GypWall** partition, consideration should be given to the size and weight of the damper - this will determine whether it can be supported directly from the partition or needs to be independently supported from the structure.
▶ Refer to **section 3.5 – Service installations.**

Electrical
The installation of electrical services should be carried out in accordance with *BS 7671*. The cut-outs in the studs can be used for routing electrical and other small services (see **GypWall CLASSIC Construction details – 1**). Switch boxes and socket outlets can be supported from Gypframe 99 FC 50 or 150 FC 90 Fixing Channels fixed horizontally between studs, or a high performance socket box detail where higher acoustic performance is required.

Where Gypframe AcouStuds are used, services are routed through 50mm x 28mm 'H' shaped push-outs, at the same centres as shown in **GypWall CLASSIC Construction details – 1a** for conventional cut-outs. Cables should be protected by conduit, or other suitable precautions taken to prevent abrasion when they pass through the metal frame.
▶ Refer to **section 3.5 – Service installations.**

Fixing floor and ceiling channels
Gypframe Floor & Ceiling Channels must be securely fixed with a row of fixings at 600mm maximum centres. For 94mm channels and above, two rows of staggered fixings are required, each row at 600mm centres and each fixing 25mm in from the flange. If the floor is uneven, a 38mm thick timber sole plate equal to the width of the channel should be used.

If the concrete or screeded floor is new, consideration should be given to the installation of a damp-proof membrane between the floor surface and the channel or sole plate.

Door openings
The designer should consider the thickness tolerances of the partition types in relation to the proposed door frame detail. To satisfy *BS 5234* requirements for Heavy and Severe Duty partitions, door framing should be specified as shown in **Construction details – 6 - 7**. The door manufacturer should also be consulted in relation to the door detail.

Control joints
Control joints may be required in the partition to relieve stresses induced by expansion and contraction of the structure. They should coincide with movement joints within the surrounding structure.

Deflection heads
Partition head deflection designs may be necessary to accommodate deflections in the supporting floor. Deflection heads may also be required to the underside of roof structures subjected to positive and negative pressures.

For special detailing that minimises the loss of acoustic performance:
▶ Refer to **section 3.2.2 – Principles of building acoustics**.

For deflection head design:
▶ Refer to **section 6 – Partition and wall systems, GypWall CLASSIC Construction details.**

Access for maintenance
Gyproc Profilex Access Panels are available to provide access for maintenance. Access panels must be fully compatible with drywall construction and match the fire rating of the partition.

Fixtures
Due to the inherent strength of Rigidur H, some fixtures can be made directly to the board – please see the **Rigidur H for commercial applications** Product Data Sheet and the British Gypsum **SITE BOOK** for more information, available to download from www.british-gypsum.com. Heavyweight fixtures (to *BS 5234*), such as wash basins and wall cupboards, can be fixed using Gypframe 150 FC 90 Fixing Channel.
▶ Refer to **section 3.5.2 – Service penetrations and fixing into drywall systems.**

Board finishing
▶ For increased resistance to accidental damage, refer to the **Rigidur H for commercial applications** Product Data Sheet, available to download from www.british-gypsum.com

▶ Please refer to **section 3 - Basic principles of system design** for general guidance

Construction details

1 Head

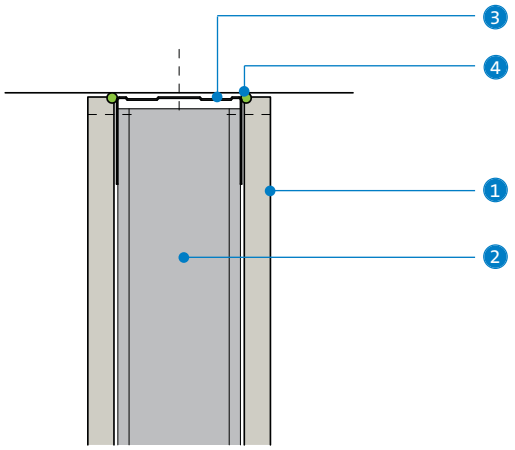

2 Base

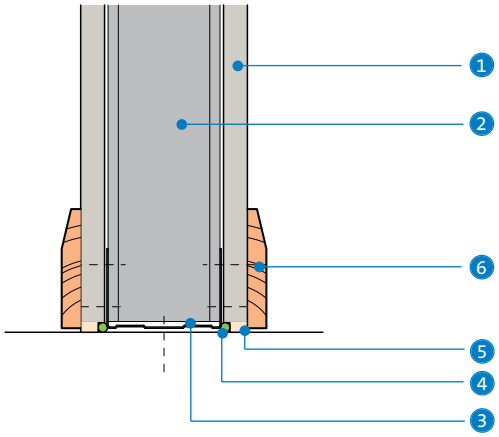

3 Junction with masonry and stop end

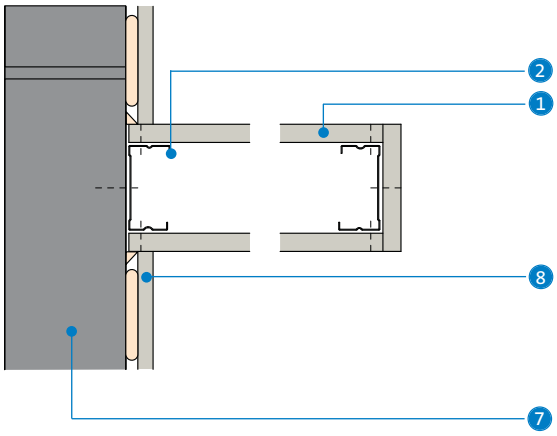

4 Internal / external corner

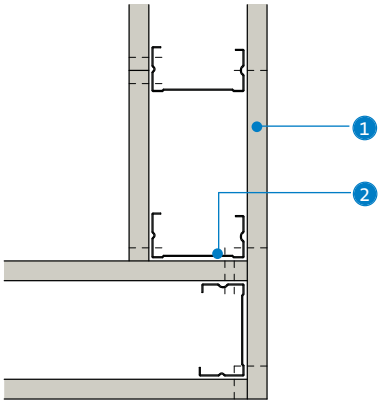

5 'T' junction

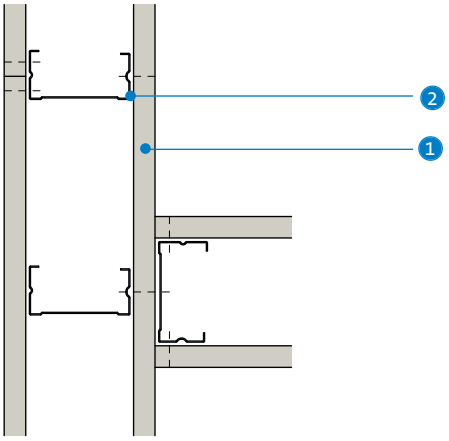

1. Rigidur H
2. Gypframe 'C' Stud
3. Gypframe Deep Flange Floor & Ceiling Channel
4. Gyproc Sealant
5. Bulk fill with Gyproc jointing materials (where gap exceeds 5mm)
6. Skirting
7. Internal blockwork
8. **DriLyner BASIC** wall lining system

Construction details

6 Door frame to satisfy *BS 5234: Parts 1 & 2: 1992 - Heavy and Severe Duty*

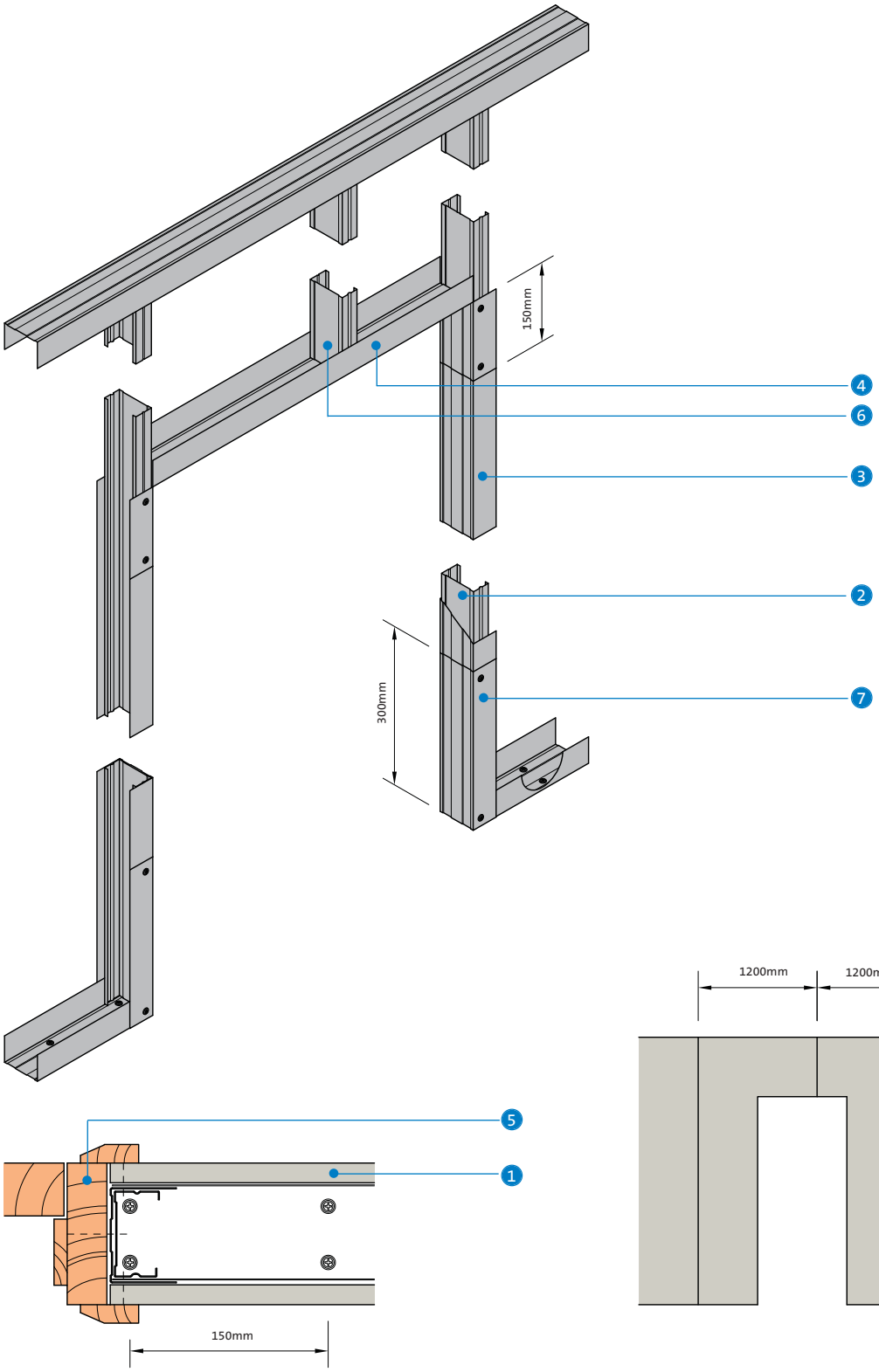

1. Rigidur H
2. Gypframe 'C' Stud
3. Gypframe Deep Flange Floor & Ceiling Channel to sleeve studs
4. Gypframe Deep Flange Floor & Ceiling Channel cut and bent to form door head
5. Timber door frame and architrave
6. Gypframe 'C' Stud to maintain stud module
7. Gypframe Deep Flange Floor & Ceiling Channel cut and bent to extend up studs

NB Advice should be sought from the door manufacturer prior to the construction of these details.

NB At the base, the channel is cut and bent to extend 300mm up the studs and fixed each side with two Gyproc Wafer Head Drywall Screws. The studs each side of the opening are sleeved full height of opening with Gypframe Deep Flange Floor & Ceiling Channel.

Construction details

7 Alternative door frame to satisfy *BS 5324: Parts 1 & 2: 1992 - Heavy and Severe Duty*

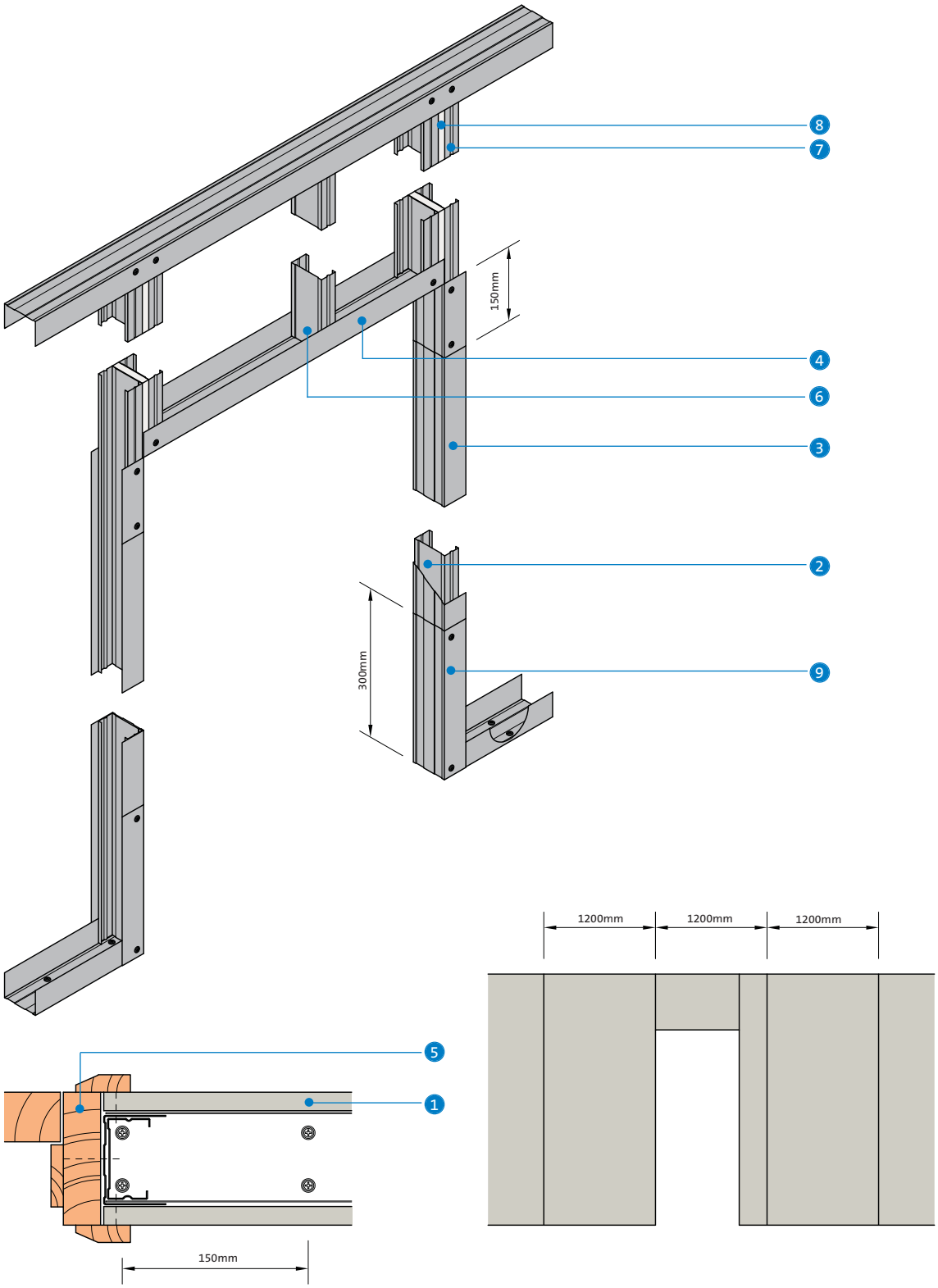

1. Rigidur H
2. Gypframe 'C' Stud
3. Gypframe Deep Flange Floor & Ceiling Channel to sleeve studs
4. Gypframe Deep Flange Floor & Ceiling Channel cut and bent to form door head
5. Timber door frame and architrave
6. Gypframe 'C' Stud to maintain stud module
7. Gypframe 'C' Studs fixed back to back with Gyproc Drywall Screws at 300mm centres staggered
8. Plasterboard infill (same type as lining) cut to fit between studs
9. Gypframe Deep Flange Floor & Ceiling Channel cut and bent to extend up studs

NB Advice should be sought from the door manufacturer prior to the construction of these details.

NB At the base, the channel is cut and bent to extend 300mm up the studs and fixed each side with two Gyproc Wafer Head Drywall Screws. The studs each side of the opening are sleeved full height of opening with Gypframe Deep Flange Floor & Ceiling Channel.

NB The principle of this alternative door detail is only suitable for **GypWall CLASSIC**, **GypWall ROBUST** and **GypWall EXTREME** for fixed head situations only.

GypWall RAPID dB Plus

Metal stud housing partition system

This section includes updated information, added since it was first published in July 2009. Please see the WHITE BOOK update document for details.
Last updated 01/04/2010

George Wimpey,
Pembroke Grange, Caversham

Images courtesy of Taylor Wimpey

GypWall RAPID dB Plus

40 – 46 R_w dB | 30 mins

GypWall RAPID dB Plus is a specialist non-loadbearing Gypframe metal stud internal wall system for use in housing. This versatile system incorporates Gyproc SoundBloc RAPID linings, which provide acoustic solutions to comply with Building Regulations Approved Document E, and also provide fire and impact resistance. The system is quick to build, timber-free, and provides pre-finished service cut-outs. There are two build options – 450mm stud framing without noggings, and 900mm stud framing with horizontal noggings.

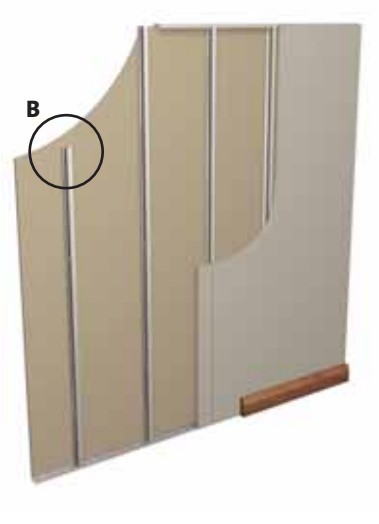

A Swaged Gypframe AcouStud

B 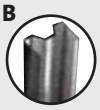 Gypframe AcouStud

Key facts

- Lightweight, versatile and quick to install
- Achieves the R_w 40 dB Building Regulations Approved Document E requirement for internal partitions
- Choice of 450mm stud centres (without noggings) or 900mm centres (with noggings)
- Fast-track alternative to non-loadbearing timber stud
- Satisfies *BS 5234* requirements up to and including Medium Duty[1]
- 30 minutes fire resistance
- Accommodates services through pre-cut apertures
- Single layer sound-resisting linings

[1] Refer to **section 3.4.2 - Principles of robust design**.

Applications

Internal wall applications, for example housing and apartments.

Sector

✓ **Housing**

✓ **Apartment buildings**

System components

Gypframe metal products

43 AS 50 AcouStud
(swaged to accommodate mid-height noggings).

Length
2395, 2695mm

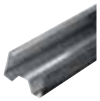

70 AS 50 AcouStud

Length
3000, 3600, 4200mm

GWR2 Nogging Channel 43mm

Length
896mm

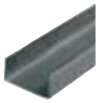

GWR3 Floor & Ceiling Channel (45 C 50)

Length 2400mm
Width 45mm

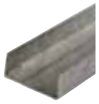

72 C 50 Standard Floor & Ceiling Channel

Length 3600mm
Width 72mm

GA6 Splayed Angle
Length 2400, 3600mm
Prime dimensions 85 x 85mm

99 FC 50 Fixing Channel

Length
2400mm

Board products

Gyproc SoundBloc RAPID [1]
Thickness 15mm
Width 900mm

[1] Moisture resistant boards are specified in intermittent wet use areas, e.g. shower cubicles.

Fixing and finishing products

Gyproc Wafer Head Drywall Screws
For Gypframe metal-to-metal fixing less than 0.8mm thick ('I' studs less than 0.6mm thick).

Gyproc Drywall Screws
For fixing boards to Gypframe metal framing less than 0.8mm thick ('I' studs less than 0.6mm thick).

Gyproc Sealant
Sealing air paths for optimum sound insulation.

Gyproc jointing materials
For seamless jointing.

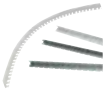

Gyproc edge and angle beads
Protecting and enhancing board edges and corners.

Thistle Board Finish or Thistle Multi-Finish
To provide a plaster skim finish.

or

Thistle Durafinish
To provide improved resistance to accidental damage.

Insulation products

Isover APR 1200
25mm, for improved acoustic performance.

Always use genuine branded British Gypsum components to qualify for **SpecSure**® lifetime warranty

Installation overview

Gypframe channel is fixed to the floor, soffit and abutments. Gypframe AcouStuds are friction-fitted vertically at either 450mm or 900mm centres (only use Gypframe 43 AS 50 AcouStuds at 900mm centres) within the channel sections to form the framework. This allows for adjustment during boarding. Studs are fitted so as to all face the same way.

With 43 AS 50 stud framing at 900mm centres, mid-height noggings are located between studs. Additional framing is installed as required to support heavy fixtures. Gyproc SoundBloc RAPID boards are screw-fixed at 400mm centres to all framing members to form the lining.

Openings

To satisfy a Medium Duty rating, Gypframe AcouStuds are sleeved with a Gypframe channel to full height either side of the door opening or, alternatively, a timber ground is fitted.

Services

Electrical and other services are normally installed after one side is boarded. Horizontal runs are routed through cut-outs in the studs. Gypframe 99 FC 50 Fixing Channel can be installed between studs to support recessed switch boxes / socket outlets.

For more information regarding services in GypWall RAPID dB Plus, please see the Product Data Sheet 'TI-009 - Services in GypWall RAPID dB Plus', available to download from www.british-gypsum.com

For full installation details, refer to the British Gypsum **SITE BOOK**, available to download from www.british-gypsum.com

For full installation details, refer to the British Gypsum **SITE BOOK**, available to download from www.british-gypsum.com

Performance (▶ Refer to **section 3 - Basic principles of system design**)

EN

Table 1 – GypWall RAPID dB Plus
Solutions to satisfy the requirements of *BS EN 1364-1: 1999*

1

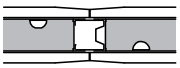

One layer of board each side of Gypframe
43 AS 50 AcouStuds at 900mm centres.
43mm Gypframe GWR2 mid-height nogging.
Linings as in table.

2

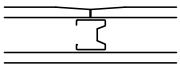

One layer of board each side of Gypframe
43 AS 50 AcouStuds at 450mm centres.
Linings as in table.

3

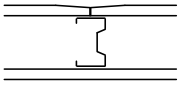

One layer of board each side of Gypframe
70 AS 50 AcouStuds at 450mm centres.
Linings as in table.

4

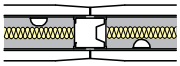

One layer of board each side of Gypframe
43 AS 50 AcouStuds at 900mm centres.
43mm Gypframe GWR2 mid-height nogging.
25mm Isover APR 1200. Linings as in table.

5

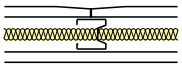

One layer of board each side of Gypframe
43 AS 50 AcouStuds at 450mm centres.
25mm Isover APR 1200. Linings as in table.

6

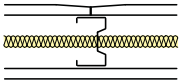

One layer of board each side of Gypframe
70 AS 50 AcouStuds at 450mm centres.
25mm Isover APR 1200. Linings as in table.

Detail	Partition thickness mm	Board type	Lining thickness mm	Maximum partition height[1] mm	Sound insulation R_w dB	Duty rating	Approx. weight kg/m²	System reference
30 minutes fire resistance EN								
1	75	SoundBloc RAPID	1 x 15	2400	40	Medium	27	A139A001
2	75	SoundBloc RAPID	1 x 15	2700	40	Medium	27	A139A005
5	75	SoundBloc RAPID	1 x 15	2700	43	Medium	28	A139A006
4	75	SoundBloc RAPID	1 x 15	2400	44	Medium	28	A139A003
3	102	SoundBloc RAPID	1 x 15	2700	42	Medium	28	A139A011
6	102	SoundBloc RAPID	1 x 15	2700	46	Medium	29	A139A012

[1] The maximum heights quoted are limited by the fire state field of application or by limiting deflection of L/240 at 200 Pa, whichever is the more onerous.

NB The fire resistance and sound insulation performances are for imperforate partitions, walls and ceilings incorporating boards with all joints taped and filled, or skimmed according to British Gypsum's recommendations. The quoted performances are achieved only if British Gypsum components are used throughout, and the Company's fixing recommendations are strictly observed. Any variation in the specifications should be checked with British Gypsum.

Table 2 – GypWall RAPID dB Plus
Solutions to satisfy the requirements of *BS 476: Part 22: 1987*

1

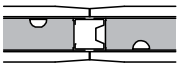

One layer of board each side of Gypframe
43 AS 50 AcouStuds at 900mm centres.
43mm Gypframe GWR2 mid-height nogging.
Linings as in table.

2

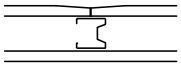

One layer of board each side of Gypframe
43 AS 50 AcouStuds at 450mm centres.
Linings as in table.

3

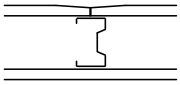

One layer of board each side of Gypframe
70 AS 50 AcouStuds at 450mm centres.
Linings as in table.

4

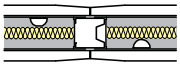

One layer of board each side of Gypframe
43 AS 50 AcouStuds at 900mm centres.
43mm Gypframe GWR2 mid-height nogging.
25mm Isover APR 1200. Linings as in table.

5

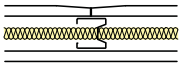

One layer of board each side of Gypframe
43 AS 50 AcouStuds at 450mm centres.
25mm Isover APR 1200. Linings as in table.

6

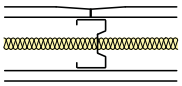

One layer of board each side of Gypframe
70 AS 50 AcouStuds at 450mm centres.
25mm Isover APR 1200. Linings as in table.

Detail	Partition thickness mm	Board type	Lining thickness mm	Maximum partition height[1] mm	Sound insulation R_w dB	Duty rating	Approx. weight kg/m²	System reference
30 minutes fire resistance BS								
1	75	SoundBloc RAPID	1 x 15	2400	40	Medium	27	A139A001
2	75	SoundBloc RAPID	1 x 15	2700	40	Medium	27	A139A005
5	75	SoundBloc RAPID	1 x 15	2700	43	Medium	28	A139A006
4	75	SoundBloc RAPID	1 x 15	2400	44	Medium	28	A139A003
3	102	SoundBloc RAPID	1 x 15	2700	42	Medium	28	A139A011
6	102	SoundBloc RAPID	1 x 15	2700	46	Medium	29	A139A012

[1] Based on a limiting deflection of L/240 at 200 Pa.

NB The fire resistance and sound insulation performances are for imperforate partitions, walls and ceilings incorporating boards with all joints taped and filled, or skimmed according to British Gypsum's recommendations. The quoted performances are achieved only if British Gypsum components are used throughout, and the Company's fixing recommendations are strictly observed. Any variation in the specifications should be checked with British Gypsum.

Design

Planning - key factors
The position of services should be pre-determined and their installation planned into the frame erection stage.

Cavity fire barriers
Gyproc SoundBloc RAPID screw-fixed into the web of perimeter channels or vertical studs will provide a satisfactory closure to flame and smoke.
▶ Refer to **section 10 – Cavity fire barriers**.

Services
Electrical
The installation of electrical services should be carried out in accordance with *BS 7671*. The cut-outs in the studs can be used for routing electrical and other small services (see **GypWall CLASSIC Construction details – 1**). Switch boxes and socket outlets can be supported from Gypframe 99 FC 50 Fixing Channel fixed horizontally between studs, or a high performance socket box detail where higher acoustic performance is required.

Where Gypframe AcouStuds are used, services are routed through 50mm x 28mm 'H' shaped push-outs, at the same centres as shown in **GypWall CLASSIC Construction details – 1a** for conventional cut-outs. Cables should be protected by conduit, or other suitable precautions taken to prevent abrasion when they pass through the metal frame.

Heating pipes
Where heating pipes, particularly micro-bore systems, are to be located within the partition, it is recommended that only one pipe is passed through each aperture in the metal framework. If this cannot be accommodated for whatever reason, it may then be necessary to incorporate proprietary pipe restraining clips or other means of keeping the pipes apart to prevent vibration noise.

Ducts
Where a large number of electrical cables or pipes have to be accommodated, a service duct can be created by closing up the stud centres to 450mm and omitting the intermediate nogging. Electrical cables should be attached using an appropriate cable retaining device in order to satisfy the requirements of *BS 7671*.

Fixtures
Lightweight fixtures can be made directly to the partition linings. Medium weight fixtures can be made to Gypframe 99 FC 50 Fixing Channel. Heavyweight fixtures (to *BS 5234*), such as wash basins and wall cupboards, can be fixed using Gypframe 150 FC 90 Fixing Channel.
▶ Refer to **section 3.5.2 – Service penetrations and fixing into drywall systems**.

Board finishing
▶ Refer to **section 13 – Finishing systems and decorative effects**.

NB In intermittently damp use areas, such as around baths and shower cubicles, Gyproc SoundBloc RAPID MR should be used in accordance with NHBC recommendations. Two coats of Gyproc Drywall Sealer applied to the face of standard grade plasterboards, with the edges adequately protected from moisture may also be suitable to receive a tile finish. The application of Gyproc Drywall Sealer provides surface water absorption resistance only, and does not meet the performance requirements for moisture resistant grade boards as defined in *BS EN 520, type H1*.

For more information refer to the British Gypsum **SITE** BOOK, available to download from www.british-gypsum.com.

▶ Please refer to **section 3 - Basic principles of system design** for general guidance

Construction details

1 Head and base (900mm stud centres with horizontal noggings)

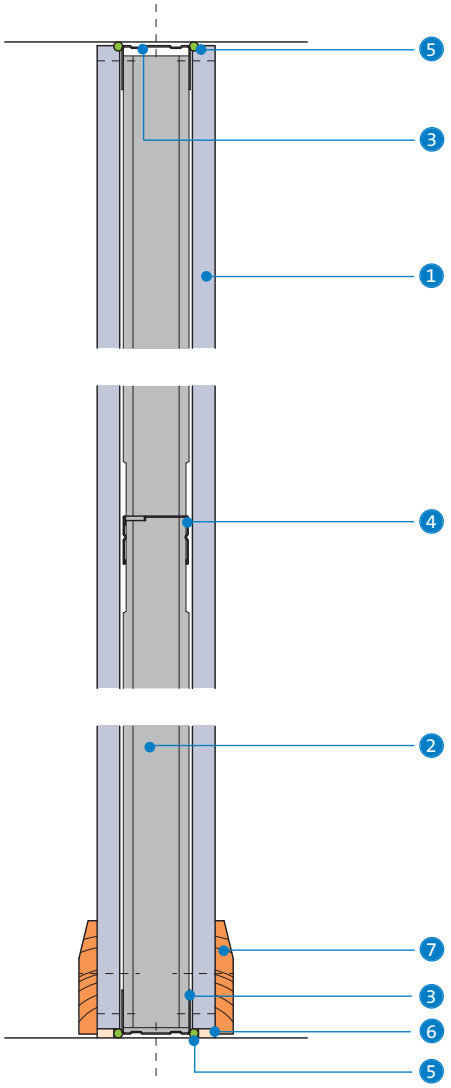

2 Junction with masonry (900mm stud centres with horizontal noggings)

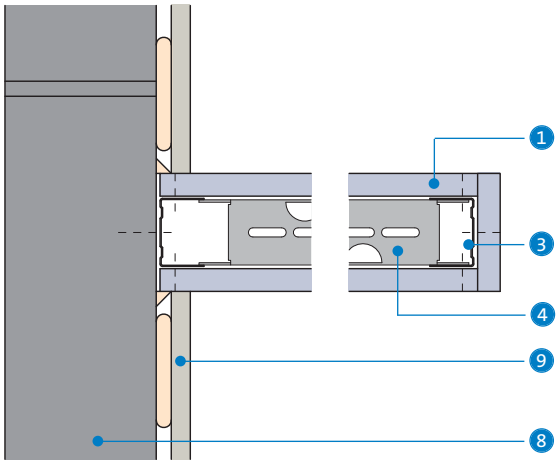

3 Junction with masonry (900mm stud centres with horizontal noggings)

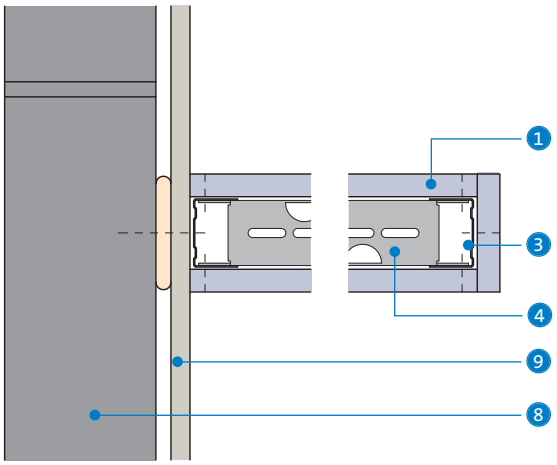

4 Intermediate stud (900mm stud centres with horizontal noggings)

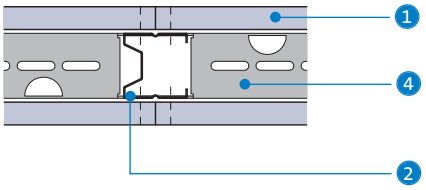

5 Internal / external corner (900mm stud centres with horizontal noggings)

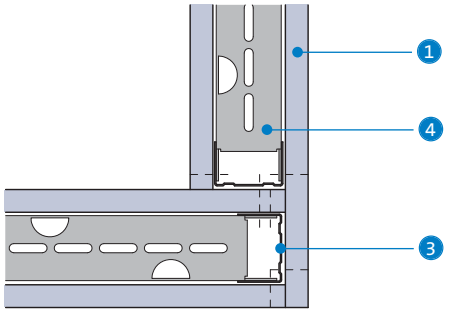

1. Gyproc SoundBloc RAPID
2. Gypframe 43 AS 50 AcouStud
3. Gypframe channel
4. Gypframe GWR2 Nogging Channel
5. Gyproc Sealant
6. Bulk fill with Gyproc jointing materials (where gap exceeds 5mm)
7. Skirting
8. Blockwork
9. **DriLyner BASIC** wall lining system

6 'T' junction (900mm stud centres with horizontal noggings)

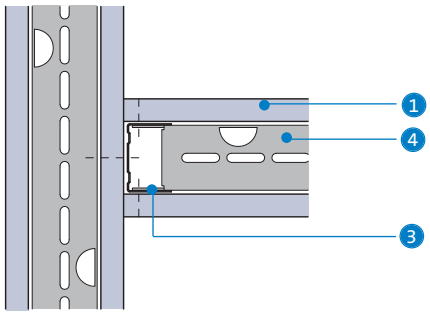

7 Splayed angle (900mm stud centres with horizontal noggings)

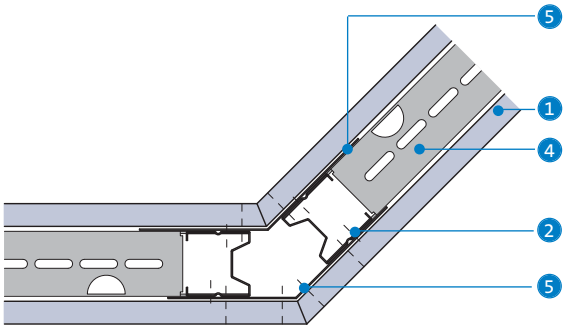

8 Wall abutment (900mm stud centres with horizontal noggings)

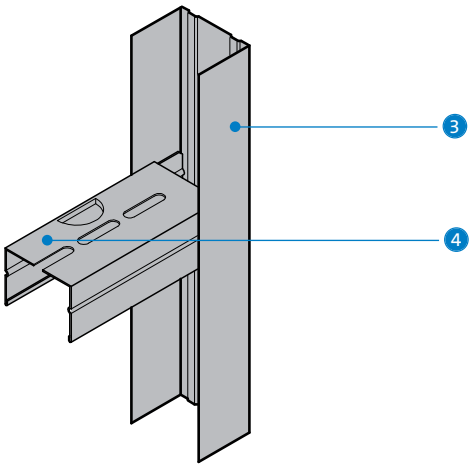

9 Framing intersection (900mm stud centres with horizontal noggings)

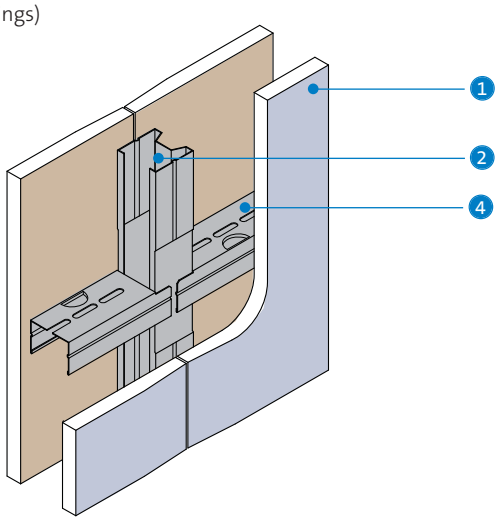

10 Additional framing for heavy fixtures

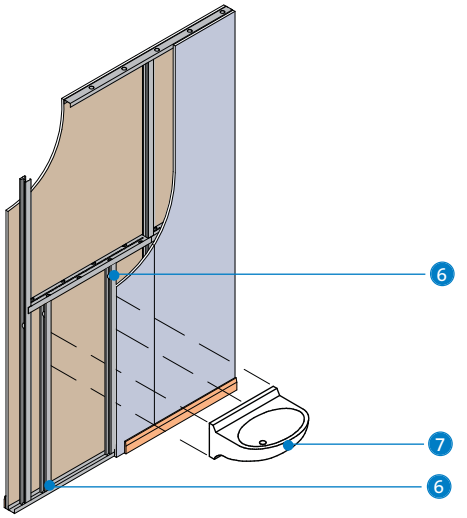

1. Gyproc SoundBloc RAPID
2. Gypframe 43 AS 50 AcouStud
3. Gypframe channel
4. Gypframe GWR2 Nogging Channel
5. Gypframe GA6 Splayed Angle
6. Additional framing
7. Wash basin

11 Head and base (450mm stud centres without horizontal noggings)

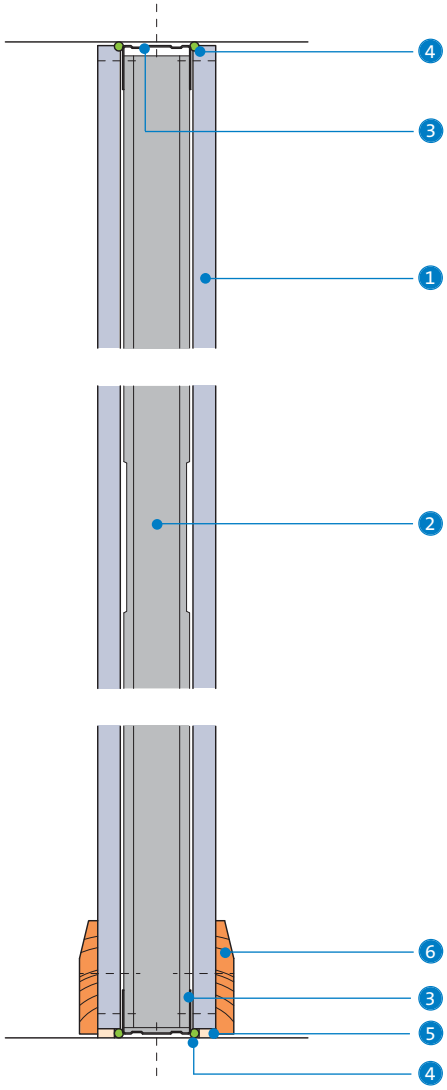

12 Junction with masonry (450mm stud centres without horizontal noggings)

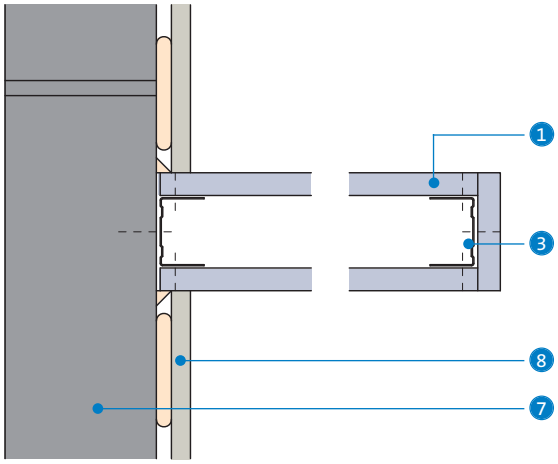

13 Junction with masonry (450mm stud centres without horizontal noggings)

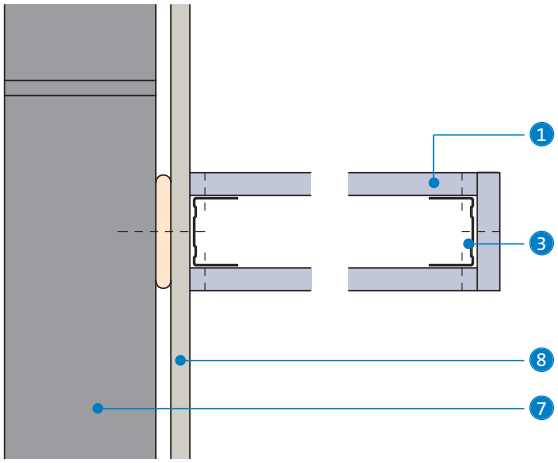

14 Intermediate stud (450mm stud centres without horizontal noggings)

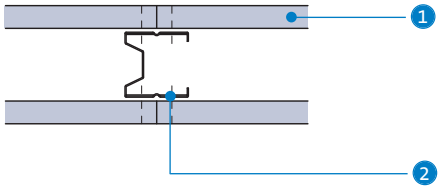

15 Internal / external corner (450mm stud centres without horizontal noggings)

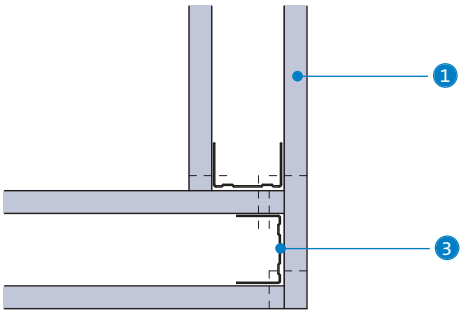

1. Gyproc SoundBloc RAPID
2. Gypframe AcouStud
3. Gypframe channel
4. Gyproc Sealant
5. Bulk fill with Gyproc jointing materials (where gap exceeds 5mm)
6. Skirting
7. Blockwork
8. **DriLyner BASIC** wall lining system

16 'T' junction (450mm stud centres without horizontal noggings)

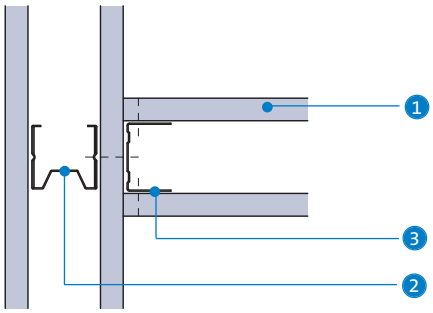

17 Splayed angle (450mm stud centres without horizontal noggings)

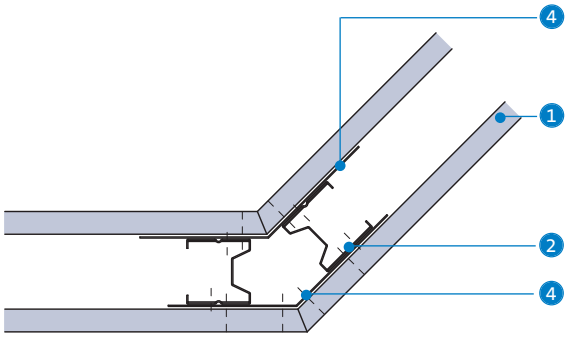

1. Gyproc SoundBloc RAPID
2. Gypframe AcouStud
3. Gypframe channel
4. Gypframe GA6 Splayed Angle

18 Door frame detailing to *BS 5234* - Medium Duty, studs either side of door opening fully sleeved

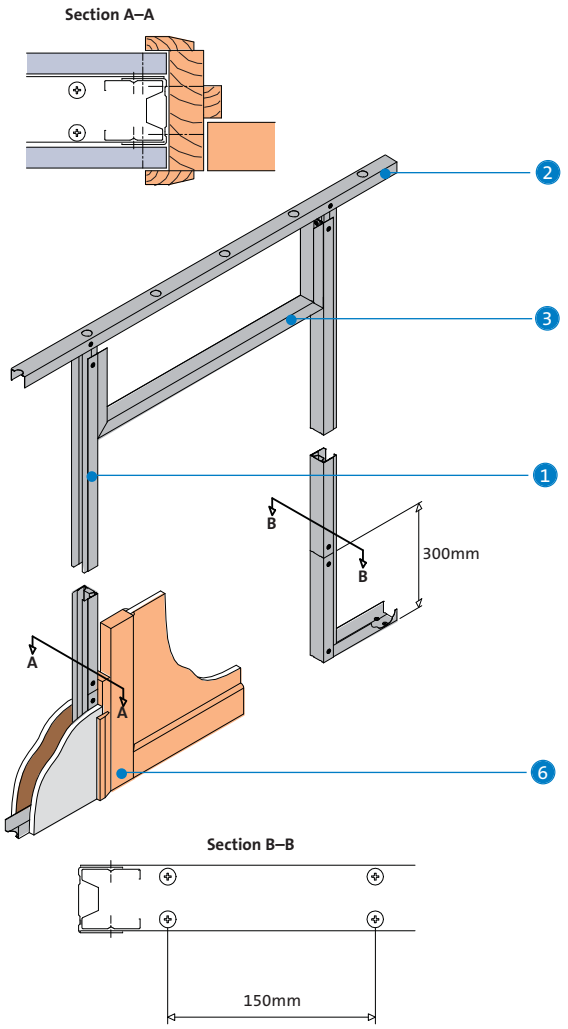

19 Door frame detailing to *BS 5234* - Medium Duty, timber sub-frame around door opening

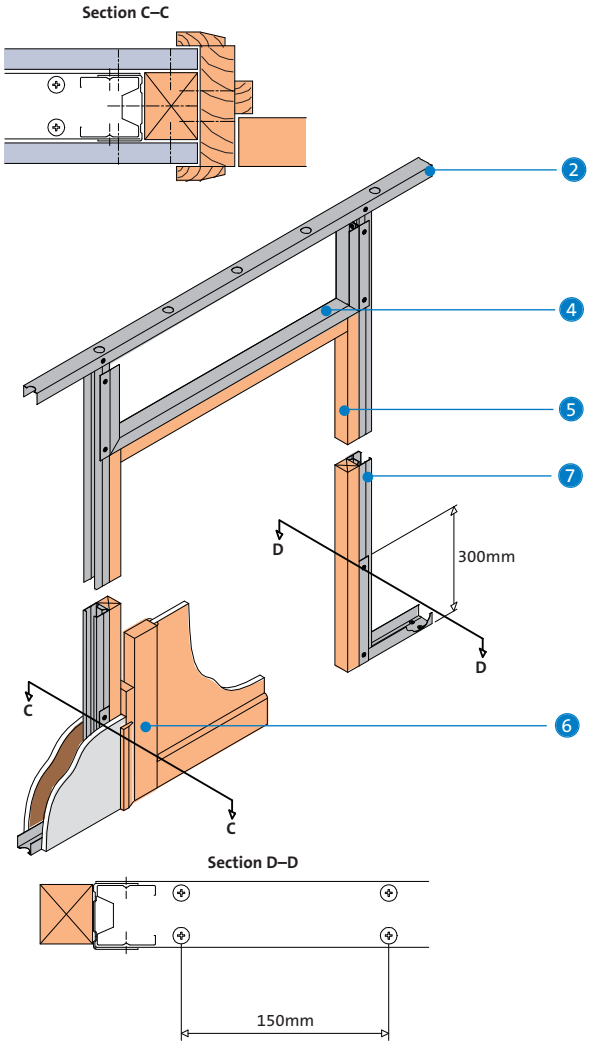

20 Forming door head where studs either side of door opening have a timber ground fitted

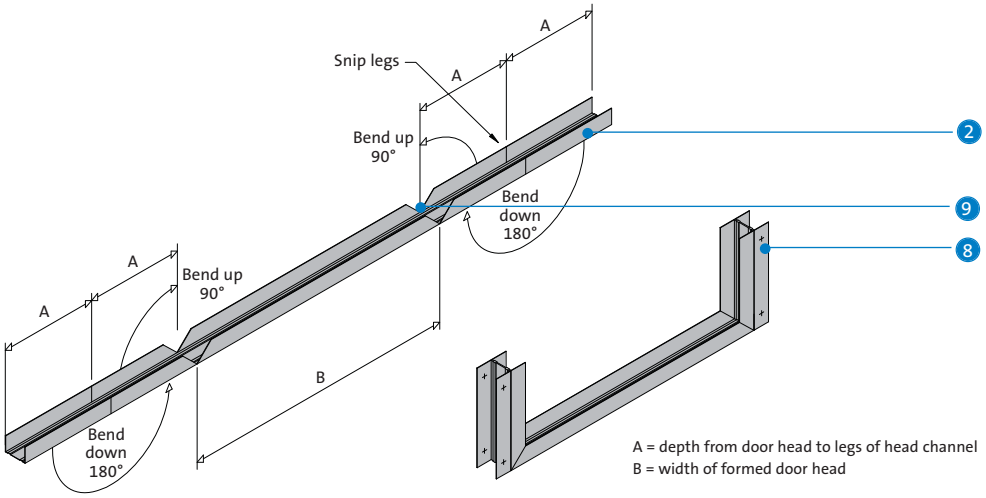

1. Gypframe AcouStud fully sleeved with Gypframe channel (both sides of opening)
2. Gypframe channel
3. Gypframe channel cut and bent to form door head
4. Gypframe channel cut, bent and bent back on itself to form door head (▶ Refer to **Construction details - 20**)
5. Timber sub-frame
6. Doorset
7. Gypframe AcouStud
8. Finished assembly fixed to Gypframe AcouStuds with Gyproc Wafer Head Drywall Screws
9. Mitre cuts

NB ⊕ Denotes location of fixings into floor.

GypWall QUIET

Acoustic separating wall system

This section includes updated information, added since it was first published in July 2009. Please see the WHITE BOOK update document for details.
Last updated 21/01/2011

Barratt Homes,
Lytham St. Annes

GypWall QUIET

61 – 64 R_w dB

60 – 120 mins

GypWall QUIET is a lightweight, non-loadbearing, twin framed acoustic separating wall, primarily used as a sound resisting wall in residential units such as flats and apartments, to meet the requirements of the Building Regulations Approved Document E. The system can also be specified in commercial and industrial buildings to meet a specific level of sound insulation performance.

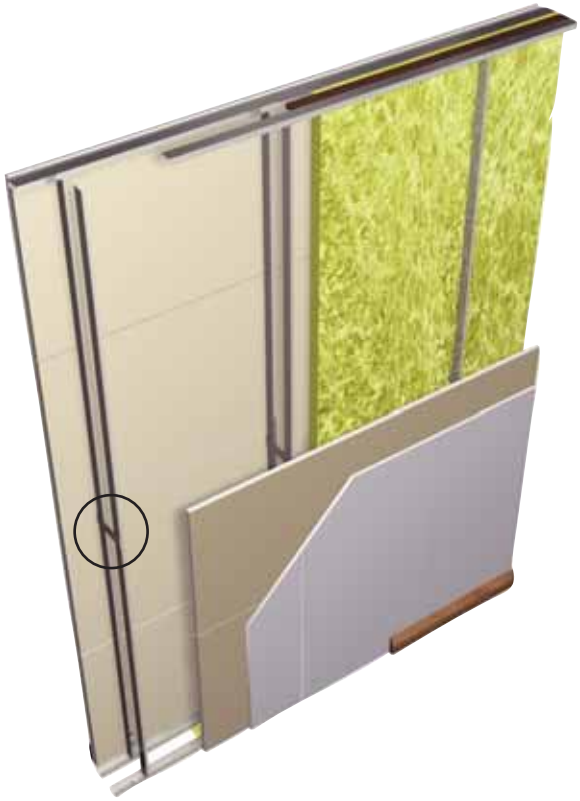

Gypframe 'C' Stud

+

Gypframe Fixing Channel cross brace

+

Gypframe 'C' Stud

Key facts

- Provides sound insulation solutions which meet Building Regulations Approved Document E for sound insulation between residential dwellings
- Accommodates services between the twin stud frameworks
- Satisfies *BS 5234* requirements up to and including Severe Duty[1]
- Accommodates concrete or steel columns within the cavity

[1] Refer to **section 3.4.2 - Principles of robust design**.

Applications

A wide range of applications, primarily used in flats and apartments.

Sector

- ✓ Education
- ✓ Healthcare
- ✓ Apartment buildings
- ✓ High-rise multi-occupancy

System components

Gypframe metal products

48 S 50 'C' Stud

Length
2400, 2700, 3000mm
3600mm

Standard Floor & Ceiling Channel
50 C 50
Deep Flange Floor & Ceiling Channel
50 DC 60
Extra Deep Flange Floor & Ceiling Channel
50 EDC 70
All channels are available in 3600mm only.

GFS1 Fixing Strap

99 FC 50
Fixing Channel
(for cross braces)

Length
2400mm

150 FC 90
Fixing Channel

Length
1197mm

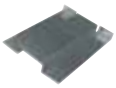

Service Support Plate
For the installation of plywood within a partition cavity.

Length
130mm

Board products

Gyproc Plank

Thickness	19mm
Width	600mm

Gyproc FireLine[1]

Thickness	15mm
Width	1200mm

Gyproc SoundBloc[1]

Thickness	12.5mm, 15mm
Width	1200mm

[1] Moisture resistant boards are specified in intermittently wet use areas, e.g. shower cubicles.

Fixing and finishing products

Gyproc Wafer Head Drywall Screws
For Gypframe metal-to-metal fixing less than 0.8mm thick ('I' studs less than 0.6mm thick).

Gyproc Drywall Screws
For fixing boards to Gypframe metal framing less than 0.8mm thick ('I' studs less than 0.6mm thick).

Gyproc Sealant
Sealing airpaths for optimum sound insulation.

Gyproc jointing materials
For seamless jointing.

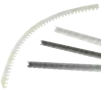

Gyproc edge and angle beads
Protecting and enhancing board edges and corners.

Gyproc Control Joint
To accommodate structural movement.

Gyproc FireStrip
For fire-stopping deflection heads.

Thistle Board Finish or Thistle Multi-Finish
To provide a plaster skim finish.

or

Thistle Durafinish
To provide improved resistance to accidental damage.

Insulation products

Isover APR 1200
25mm and 50mm, to achieve acoustic performance.

Isover High Performance Acoustic Slab
75mm, to achieve acoustic performance.

Installation overview

Gypframe Floor & Ceiling Channels are fixed to the floor and soffit to achieve the specified wall thickness. Gypframe 'C' Studs are fitted vertically to a friction-fit within the channel sections, and to abutments, to form the framework. This allows for adjustment during boarding. Studs are fitted to face the same way and extended by splicing to the specified height.

The frameworks are braced using Gypframe 99 FC 50 Fixing Channel at 1200mm maximum centres, or mid-height for walls less than 2400mm high. Additional framing is installed as required to support heavy fixtures. The specified Isover insulation is installed between frameworks. Gyproc Sealant is applied to the framework perimeters to seal airpaths.

Boards are screw-fixed to framing members to form the lining. Gyproc Plank is fixed horizontally to framing members and end joints are half-staggered in alternate courses. Face lining boards are fixed vertically, joints staggered with Gyproc Plank. Horizontal board-end joints should be backed with Gypframe GFS1 Fixing Strap.

Openings
Openings must be constructed with care to maintain the acoustic performance. Specialist heavy acoustic door sets may be required.

Services
Electrical and other services are normally installed after one side is boarded. Horizontal runs are routed through cut-outs in the studs. Gypframe 99 FC 50 Fixing Channel is installed between studs to support recessed switch boxes / socket outlets, or a high performance socket box detail used where higher acoustic performance is required.

For full installation details, refer to the British Gypsum **SITE BOOK**, available to download from www.british-gypsum.com

For full installation details, refer to the British Gypsum **SITE BOOK**, available to download from www.british-gypsum.com

Performance (▶ Refer to **section 3 - Basic principles of system design**)

EN

Table 1a – GypWall QUIET 48mm Gypframe 'C' Studs with cross braces
Solutions to satisfy the requirements of *BS EN 1364-1: 1999*

1

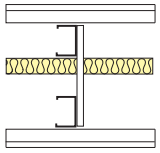

Two Gypframe 'C' Stud frameworks braced at max. 1200mm centres. Studs at 600mm centres. Isover APR 1200 in the cavity (cavity width 137mm[1]). Linings and insulation as in table.

2

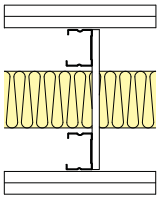

Two Gypframe 'C' Stud frameworks braced at max. 1200mm centres. Studs at 600mm centres. Isover High Performance Acoustic Slab in the cavity (cavity width 190mm[1]). Linings and insulation as in table.

3

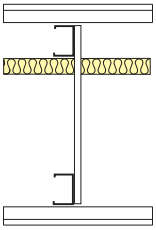

Two Gypframe 'C' Stud frameworks braced at max. 1200mm centres. Studs at 600mm centres. Isover APR 1200 in the cavity (cavity width 237mm[1]). Linings and insulation as in table.

Detail	Partition thickness mm	Board type	Lining thickness mm	Maximum partition height[2] mm	Insulation thickness mm	Sound insulation R_w (R_w + Ctr)[3] dB	Partition duty	Approx. weight kg/m²	System reference
60 minutes fire resistance EN									
1	200	Plank + SoundBloc	19 + 12.5	6200	25	61 (47)	Severe	55	A216001
1	200	SoundBloc	2 x 15	6200	50	62 (56)	Severe	55	A216009
2	250	SoundBloc	2 x 15	6200	75	63 (57)	Severe	55	A216011
3	300	Plank + SoundBloc	19 + 12.5	6200	25	62 (52)	Severe	55	A216002
3	300	SoundBloc	2 x 15	6200	25	63 (57)	Severe	55	A216008
90 minutes fire resistance EN									
1	200	Plank + SoundBloc	19 + 12.5	5000	25	61 (47)	Severe	55	A216001
2	250	SoundBloc	2 x 15	5000	75	63 (57)	Severe	55	A216011
3	300	Plank + SoundBloc	19 + 12.5	5000	25	62 (52)	Severe	55	A216002
3	300	SoundBloc	2 x 15	5000	100	64 (58)	Severe	55	A216012
120 minutes fire resistance EN									
1	200	FireLine	2 x 15	7500	50	60 (53)	Severe	52	A216010

[1] Increasing cavity width improves acoustic performance, especially at low frequencies (R_w + Ctr).
[2] The maximum heights quoted are limited by the fire state field of application or by limiting deflection of L/240 at 200 Pa, whichever is the more onerous.
[3] Sound insulation performance explanation for residential specification shown below:

	Approved Document E requirement D_{nTw} + Ctr dB	Minimum solution[4] (R_w + Ctr) dB	Recommended solution[4] (R_w + Ctr) dB
Conversions	43	(47)	(52)
New-build	45	(49)	(54)

[4] Minimum solutions provide little or no margin of safety to allow for reductions in performance due to flanking transmissions. Recommended solutions have greater potential to satisfy the requirements of Building Regulations Approved Document E.

NB For heights above 4200mm Gypframe Deep Flange Floor & Ceiling Channel should be used at base and at head (subject to deflection criteria).

NB The fire resistance and sound insulation performances are for imperforate partitions, walls and ceilings incorporating boards with all joints taped and filled, or skimmed according to British Gypsum's recommendations. The quoted performances are achieved only if British Gypsum components are used throughout, and the Company's fixing recommendations are strictly observed. Any variation in the specifications should be checked with British Gypsum.

BS Table 1b – GypWall QUIET 48mm Gypframe 'C' Studs with cross braces
Solutions to satisfy the requirements of *BS 476: Part 22: 1987*

1

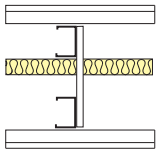

Two Gypframe 'C' Stud frameworks braced at max. 1200mm centres. Studs at 600mm centres. Isover APR 1200 in the cavity (cavity width 137mm[1]). Linings and insulation as in table.

2

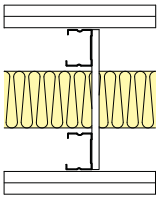

Two Gypframe 'C' Stud frameworks braced at max. 1200mm centres. Studs at 600mm centres. Isover High Performance Acoustic Slab in the cavity (cavity width 190mm[1]). Linings and insulation as in table.

3

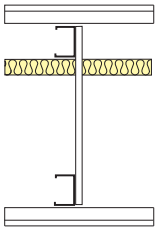

Two Gypframe 'C' Stud frameworks braced at max. 1200mm centres. Studs at 600mm centres. Isover APR 1200 in the cavity (cavity width 237mm[1]). Linings and insulation as in table.

Detail	Partition thickness mm	Board type	Lining thickness mm	Maximum partition height[2] mm	Insulation thickness mm	Sound insulation R_w (R_w + Ctr)[3] dB	Partition duty	Approx. weight kg/m²	System reference
90 minutes fire resistance BS									
1	200	Plank + SoundBloc	19 + 12.5	6200	25	61 (47)	Severe	55	A216001
1	200	SoundBloc	2 x 15	7500	50	62 (56)	Severe	55	A216009
2	250	SoundBloc	2 x 15	7500	75	63 (57)	Severe	55	A216011
3	300	Plank + SoundBloc	19 + 12.5	6200	25	62 (52)	Severe	55	A216002
3	300	SoundBloc	2 x 15	7500	25	63 (57)	Severe	55	A216008
120 minutes fire resistance BS									
1	200	FireLine	2 x 15	7500	50	60 (53)	Severe	52	A216010

[1] Increasing cavity width improves acoustic performance, especially at low frequencies (R_w + Ctr).
[2] Based on a limiting deflection of L/240 at 200 Pa.
[3] Sound insulation performance explanation for residential specification shown below:

	Approved Document E requirement D_{nTw} + Ctr dB	Minimum solution[4] (R_w + Ctr) dB	Recommended solution[4] (R_w + Ctr) dB
Conversions	43	(47)	(52)
New-build	45	(49)	(54)

[4] Minimum solutions provide little or no margin of safety to allow for reductions in performance due to flanking transmissions. Recommended solutions have greater potential to satisfy the requirements of Building Regulations Approved Document E.

NB For heights above 4200mm Gypframe Deep Flange Floor & Ceiling Channel should be used at base and at head (subject to deflection criteria).

NB The fire resistance and sound insulation performances are for imperforate partitions, walls and ceilings incorporating boards with all joints taped and filled, or skimmed according to British Gypsum's recommendations. The quoted performances are achieved only if British Gypsum components are used throughout, and the Company's fixing recommendations are strictly observed. Any variation in the specifications should be checked with British Gypsum.

Design

Planning - key factors
The position of services and heavy fixtures should be pre-determined and their installation planned into the frame erection stage. All penetrations will need to be adequately stopped for fire and acoustics.

Cross-bracing
The Gypframe 'C' Stud frameworks must be braced using short lengths of Gypframe 99 FC 50 Fixing Channel. Braces should be installed at 1200mm maximum centres, or at mid-height for walls less than 2400mm high. Braces must be fixed using two Gyproc Wafer Head Drywall Screws into each Gypframe 'C' Stud.

Cavity fire barriers
Stone mineral wool cut neatly to fit across the cavity forms a suitable closure.

Services
Penetrations
Penetrations of fire-resistant or sound-insulating constructions for services need careful consideration to ensure that the performance of the element is not downgraded and also that the services themselves do not act as the mechanism of fire spread or sound transmission.
▶ Refer to **section 3.5 – Service installations.**

Electrical
The installation of electrical services should be carried out in accordance with *BS 7671*. The cut-outs in the studs can be used for routing electrical and other small services (see **GypWall CLASSIC Construction details – 1**). Switch boxes and socket outlets can be supported from Gypframe 99 FC 50 or 150 FC 90 Fixing Channels fixed horizontally between studs, or a high performance socket box detail where higher acoustic performance is required.

Cables should be protected by conduit, or other suitable precautions taken to prevent abrasion when they pass through the metal frame.
▶ Refer to **section 3.5 – Service installations.**

Fixing floor and ceiling channels
Gypframe Floor & Ceiling Channels must be securely fixed with a row of fixings at 600mm maximum centres. For 94mm channels and above, two rows of staggered fixings are required, each row at 600mm centres and each fixing 25mm in from the flange. If the floor is uneven, a 38mm thick timber sole plate equal to the width of the channel should be used.

If the concrete or screeded floor is new, consideration should be given to the installation of a damp-proof membrane between the floor surface and the channel or sole plate.

Deflection heads
Partition head deflection designs may be necessary to accommodate deflections in the supporting floor. Deflection heads may also be required to the underside of roof structures subjected to positive and negative pressures.

For special detailing which minimises the loss of acoustic performance:
▶ Refer to **section 3.2.2 – Principles of building acoustics.**

For deflection head design:
▶ Refer to **section 6 – Partition and wall systems, GypWall CLASSIC Construction details.**

Fixtures
Lightweight fixtures can be made directly to the partitions. Medium weight fixtures can be made to Gypframe 99 FC 50 Fixing Channel. Heavyweight fixtures (to *BS 5234*), such as wash basins and wall cupboards, can be fixed using Gypframe 150 FC 90 Fixing Channel.
▶ Refer to **section 3.5.2 – Service penetrations and fixing into drywall systems.**

Board finishing
▶ Refer to **section 13 – Finishing systems and decorative effects.**

For more information, refer to the British Gypsum **SITE BOOK**, available to download from www.british-gypsum.com

▶ Please refer to **section 3 - Basic principles of system design** for general guidance

Construction details

1 Head and base

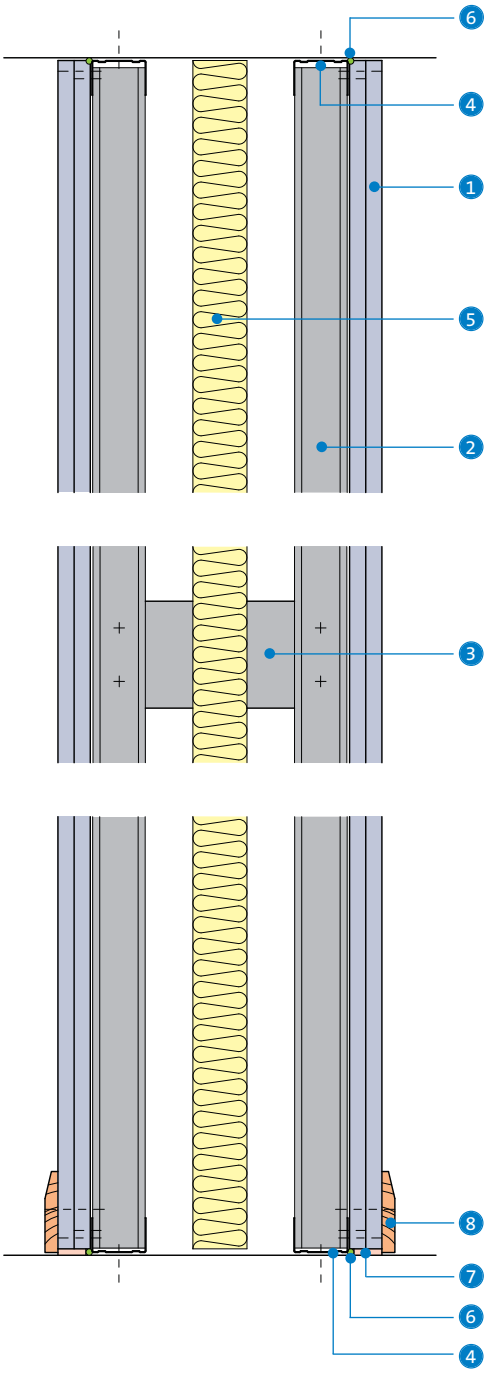

2 Deflection head for 15mm downward movement and 60 minutes fire resistance

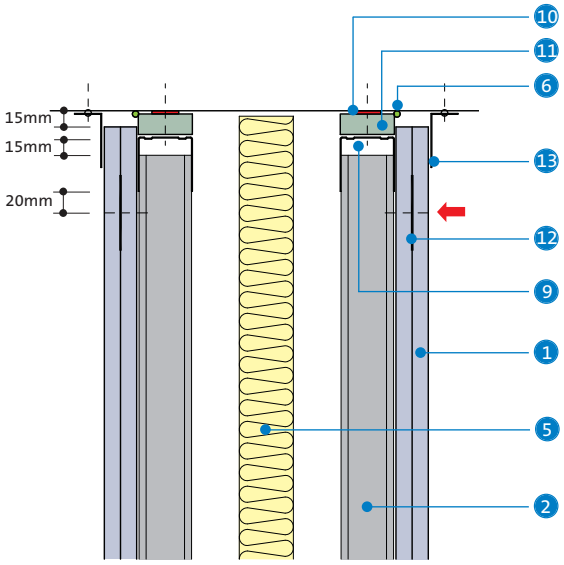

1. Gyproc plasterboard
2. Gypframe 'C' Stud
3. Gypframe 99 FC 50 Fixing Channel (at 1200mm vertical centres)
4. Gypframe Standard Floor & Ceiling Channel
5. Isover insulation
6. Gyproc Sealant
7. Bulk fill with Gyproc jointing materials (where gap exceeds 5mm)
8. Skirting
9. Gypframe Deep Flange Floor & Ceiling Channel suitably fixed through fire-stop to structure
10. Gyproc FireStrip
11. Gyproc CoreBoard
12. Gypframe GFS1 Fixing Strap
13. Gypframe Steel Angle

NB No fixings should be made through the boards into the flanges of the head channel. The arrow ( ) denotes the position of the uppermost board fixing, which should be made into Gypframe GFS1 Fixing Strap. Continuous Gyproc FireStrip must be installed as shown to maintain fire performance.

3 'T' junction

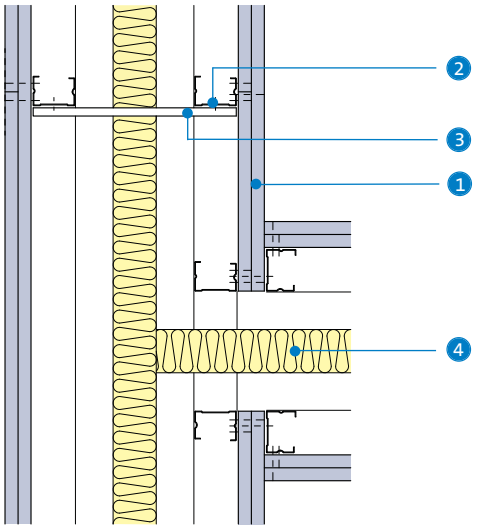

4 Alternative 'T' junction with Gypframe GA5 Internal Fixing Angle

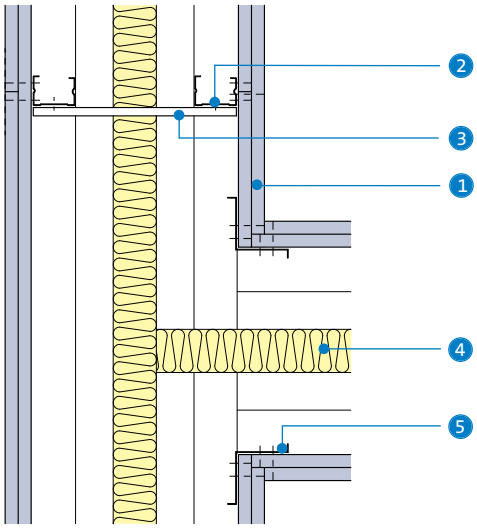

5 'T' junction with **GypWall CLASSIC** partition

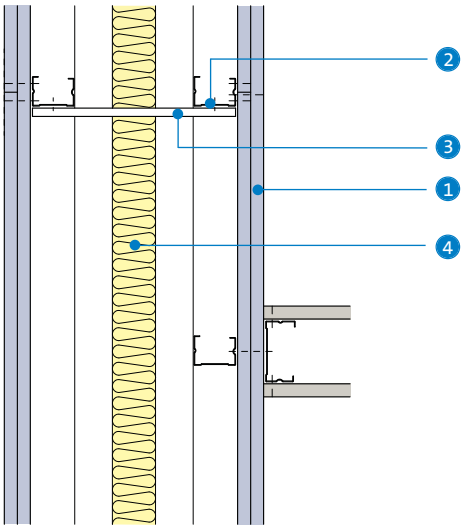

6 Internal / external corner

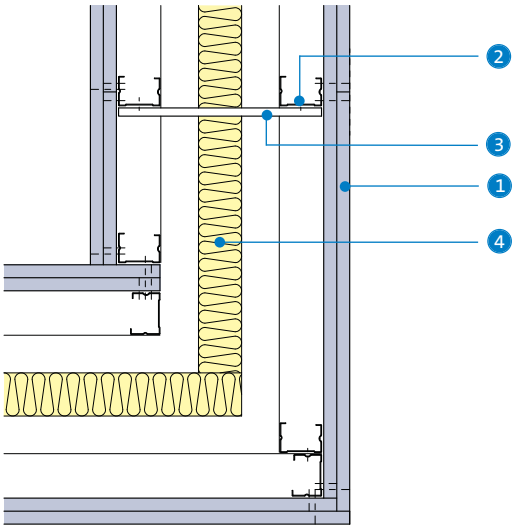

1. Gyproc plasterboard
2. Gypframe 'C' Stud
3. Gypframe 99 FC 50 Fixing Channel
4. Isover insulation
5. Gypframe GA5 Internal Fixing Angle

GypWall QUIET IWL

Independent twin frame acoustic separating wall system

This section includes updated information, added since it was first published in July 2009. Please see the WHITE BOOK update document for details.
Last updated 01/04/2010

Berkeley Homes,
Royal Arsenal, Woolwich

GypWall QUIET IWL

Approved Robust Detail (RD) E-WS-2 Performance

66 – 70 R_w dB

60 – 120 mins

GypWall QUIET IWL is a lightweight, non-loadbearing, steel 'I' stud twin frame acoustic separating wall, that requires no bracing. As an approved Robust Detail construction (E-WS-2) it is primarily used as a sound resisting wall in residential units such as flats and apartments, to meet the requirements of Building Regulations Approved Document E. The system can also be specified in commercial and industrial buildings to meet a specific level of sound insulation performance.

Key facts

- An approved Robust Detail construction that can be used to meet Building Regulations Approved Document E for separating walls without pre-completion testing
- Accommodates services between the twin stud frameworks
- Satisfies *BS 5234* requirements up to and including Severe Duty[1]

[1] Refer to **section 3.4.2 - Principles of robust design**.

Applications

A wide range of applications. Primarily used in flats and apartments specifying Robust Details.

Sector

- ✓ Education
- ✓ Healthcare
- ✓ Apartment buildings
- ✓ High-rise multi-occupancy

System components

Gypframe metal products

48 I 50 'I' Stud — **Length** 2700, 3000mm

60 I 50 'I' Stud — **Length** 2700, 3600mm

60 I 70 'I' Stud — **Length** 3600, 4200mm

70 I 70 'I' Stud — **Length** 3600, 4200mm

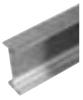

92 I 90 'I' Stud — **Length** 3600, 5000, 6000mm

For abutments and openings only

Equivalent 'C' Studs

48 S 50 — **Length** 2400, 2700, 3000, 3600mm

60 S 50 — **Length** 3000, 3600mm

70 S 50 — **Length** 2400, 2700, 3000, 3600mm 4200mm

92 S 50 — **Length** 3600, 4200mm

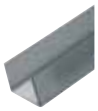

Standard Floor & Ceiling Channels
50 C 50
62 C 50
72 C 50
94 C 50
Deep Flange Floor & Ceiling Channels
50 DC 60
62 DC 60
72 DC 60
94 DC 60
Extra Deep Flange Floor & Ceiling Channels
50 EDC 70
72 EDC 80
94 EDC 70
All channels are available in 3600mm only.

99 FC 50 Fixing Channel — **Length** 2400mm

150 FC 90 Fixing Channel — **Length** 1197mm

GFS1 Fixing Strap — **Length** 2400mm

Board products

Gyproc FireLine[1]
Thickness 12.5, 15mm
Width 1200mm

Gyproc SoundBloc[1]
Thickness 15mm
Width 1200mm

[1] Moisture resistant boards are specified in intermittent wet use areas, e.g. shower cubicles.

Fixing and finishing products

Gyproc Wafer Head Drywall Screws
For Gypframe metal-to-metal fixing less than 0.8mm thick ('I' studs less than 0.6mm thick).
or

Gyproc Wafer Head Jack-Point Screws
For Gypframe metal-to-metal fixing 0.8mm thick or greater ('I' studs 0.6mm thick and greater).

Gyproc Drywall Screws
For fixing boards to Gypframe metal framing less than 0.8mm thick ('I' studs less than 0.6mm thick).
or

Gyproc Jack-Point Screws
For fixing boards to Gypframe metal framing 0.8mm thick or greater ('I' studs 0.6mm thick and greater).

Gyproc Sealant
Sealing air paths for optimum sound insulation.

Gyproc jointing materials
For seamless jointing.

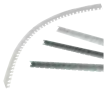

Gyproc edge and angle beads
Protecting and enhancing board edges and corners.

Gyproc Control Joint
To accommodate structural movement.

Gyproc FireStrip
For fire-stopping deflection heads.

Thistle Board Finish or Thistle Multi-Finish
To provide a plaster skim finish.

or

Thistle Durafinish
To provide improved resistance to accidental damage.

Insulation products

Isover APR 1200
50mm and 100mm, to achieve acoustic performance.

Always use genuine branded British Gypsum components to qualify for **SpecSure®** lifetime warranty

Installation overview

Gypframe Floor & Ceiling Channel is fixed to the floor and soffit. Gypframe 'I' Studs are fitted vertically to a friction-fit within the channel sections, and Gypframe 'C' Studs to abutments, to form the first framework. The second framework is installed as the first, with stud frameworks spaced to achieve the specified wall thickness. Do not brace the two frames. Boards are screw-fixed to framing members to form the lining.

Openings

Openings must be constructed with care to maintain the acoustic performance. Specialist heavy acoustic door sets may be required.

Services

Electrical and other services are normally installed after one side is boarded. Horizontal runs are routed through cut-outs in the studs. Gypframe 99 FC 50 Fixing Channel is installed between studs to support recessed switch boxes / socket outlets, or a high performance socket box detail used where higher acoustic performance is required.

For full installation details, refer to the British Gypsum **SITE** BOOK, available to download from www.british-gypsum.com

For full installation details, refer to the British Gypsum **SITE BOOK**, available to download from www.british-gypsum.com

Performance (▶ Refer to **section 3 - Basic principles of system design**)

EN

Table 1a – GypWall QUIET IWL
Solutions to satisfy the requirements of *BS EN 1364-1: 1999*

1
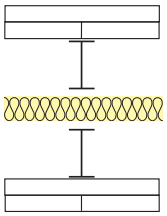

Two layers of board fixed to the outside faces of two Gypframe 48 I 50 'I' Stud frameworks with studs at 600mm centres. 50mm Isover APR 1200 in the cavity (cavity width 140mm). Linings as in table.

2
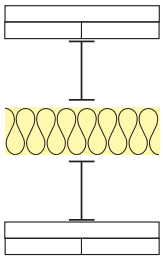

Two layers of board fixed to the outside faces of two Gypframe 60 I 70 'I' Stud frameworks with studs at 600mm centres. 100mm Isover APR 1200 in the cavity (cavity width 190mm). Linings as in table.

3
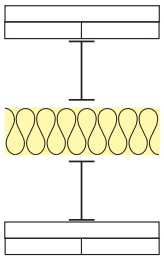

Two layers of board fixed to the outside faces of two Gypframe 60 I 50 'I' Stud frameworks with studs at 600mm centres. 100mm Isover APR 1200 in the cavity (cavity width 190mm). Linings as in table.

4
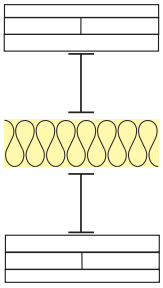

Three layers of board fixed to the outside faces of two Gypframe 60 I 70 'I' Stud frameworks with studs at 600mm centres. 100mm Isover APR 1200 in the cavity (cavity width 190mm). Linings as in table.

Detail	Partition thickness mm	Board type	Lining thickness mm	Maximum partition height[1] mm	Sound insulation R_w (R_w + Ctr)[2] dB	Duty rating	Approx. weight kg/m²	System reference
90 minutes fire resistance EN								
1	200	SoundBloc	2 x 15	2800	66 (58)	Severe	55	A216014
2	250	SoundBloc	2 x 15	3900	RD[3]	Severe	55	A216007
3	250	SoundBloc	2 x 15	3300	70 (62) / RD[3]	Severe	55	A216013
120 minutes fire resistance EN								
1	200	DuraLine	2 x 15	2800	66 (58)	Severe	60	X216011
4	275	SoundBloc + FireLine	2 x 15 1 x 12.5	3900	RD[3]	Severe	75	A216005

[1] The maximum heights quoted are limited by the fire state field of application or by limiting deflection of L/240 at 200 Pa, whichever is the more onerous.
[2] British Gypsum Approved System designed to achieve minimum D_{nTw} + Ctr 43 dB, subject to Pre-Completion Testing (see table below). For further explanation, refer to **section 3.2 – Building acoustics**.
[3] **RD** = Robust Detail E-WS-2 - approved Robust Detail solution designed to achieve minimum D_{nTw} + Ctr 45 dB. Minimum 60mm Gypframe 'I' Studs required.

	Approved Document E requirement D_{nTw} + Ctr dB	Minimum solution[4] (R_w + Ctr) dB	Recommended solution[4] (R_w + Ctr) dB
Conversions	43	(47)	(52)
New-build	45	(49)	(54)

[4] Minimum solutions provide little or no margin of safety to allow for reductions in performance due to flanking transmissions. Recommended solutions have greater potential to satisfy the requirements of Building Regulations Approved Document E.

NB The fire resistance and sound insulation performances are for imperforate partitions, walls and ceilings incorporating boards with all joints taped and filled, or skimmed according to British Gypsum's recommendations. The quoted performances are achieved only if British Gypsum components are used throughout, and the Company's fixing recommendations are strictly observed. Any variation in the specifications should be checked with British Gypsum.

Table 1b – GypWall QUIET IWL
Solutions to satisfy the requirements of *BS 476: Part 22*

1
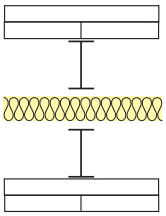

Two layers of board fixed to the outside faces of two Gypframe 48 I 50 'I' Stud frameworks with studs at 600mm centres. 50mm Isover APR 1200 in the cavity (cavity width 140mm). Linings as in table.

2
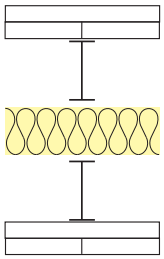

Two layers of board fixed to the outside faces of two Gypframe 60 I 70 'I' Stud frameworks with studs at 600mm centres. 100mm Isover APR 1200 in the cavity (cavity width 190mm). Linings as in table.

3
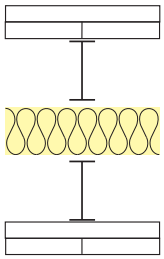

Two layers of board fixed to the outside faces of two Gypframe 60 I 50 'I' Stud frameworks with studs at 600mm centres. 100mm Isover APR 1200 in the cavity (cavity width 190mm). Linings as in table.

4
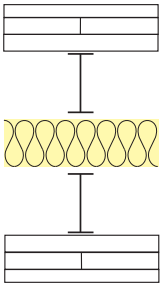

Three layers of board fixed to the outside faces of two Gypframe 60 I 70 'I' Stud frameworks with studs at 600mm centres. 100mm Isover APR 1200 in the cavity (cavity width 190mm). Linings as in table.

Detail	Partition thickness mm	Board type	Lining thickness mm	Maximum partition height[1] mm	Sound insulation R_w (R_w + Ctr)[2] dB	Duty rating	Approx. weight kg/m²	System reference
90 minutes fire resistance BS								
1	200	SoundBloc	2 x 15	2800	66 (58)	Severe	55	A216014
2	250	SoundBloc	2 x 15	3900	RD[3]	Severe	55	A216007
3	250	SoundBloc	2 x 15	3300	70 (62) / RD[3]	Severe	55	A216013
120 minutes fire resistance BS								
1	200	DuraLine	2 x 15	2800	66 (58)	Severe	60	X216011
4	275	SoundBloc + FireLine	2 x 15 1 x 12.5	3900	RD[3]	Severe	75	A216005

[1] Based on a limiting deflection of L/240 at 200 Pa.
[2] British Gypsum Approved System designed to achieve minimum D_{nTw} + Ctr 43 dB, subject to Pre-Completion Testing (see table below). For further explanation, refer to **section 3.2 – Building acoustics**.
[3] **RD** = Robust Detail E-WS-2 - approved Robust Detail solution designed to achieve minimum D_{nTw} + Ctr 45 dB. Minimum 60mm Gypframe 'I' Studs required.

	Approved Document E requirement D_{nTw} + Ctr dB	Minimum solution[4] (R_w + Ctr) dB	Recommended solution[4] (R_w + Ctr) dB
Conversions	43	(47)	(52)
New-build	45	(49)	(54)

[4] Minimum solutions provide little or no margin of safety to allow for reductions in performance due to flanking transmissions. Recommended solutions have greater potential to satisfy the requirements of Building Regulations Approved Document E.

NB The fire resistance and sound insulation performances are for imperforate partitions, walls and ceilings incorporating boards with all joints taped and filled, or skimmed according to British Gypsum's recommendations. The quoted performances are achieved only if British Gypsum components are used throughout, and the Company's fixing recommendations are strictly observed. Any variation in the specifications should be checked with British Gypsum.

Design

Planning - key factors
The position of services and heavy fixtures should be pre-determined and their installation planned into the frame erection stage.
All penetrations will need to be adequately stopped for fire and acoustics.

Cavity fire barriers
Stone mineral wool cut neatly to fit across the cavity forms a suitable closure.

Services
Penetrations
Penetrations of fire-resistant or sound-insulating constructions for services need careful consideration to ensure that the performance of the element is not downgraded, and also that the services themselves do not act as the mechanism of fire spread or sound transmission.
▶ Refer to **section 3.5 – Service installations**

Electrical
The installation of electrical services should be carried out in accordance with *BS 7671*. The cut-outs in the studs can be used for routing electrical and other small services (see **GypWall CLASSIC Construction details – 1**). Switch boxes and socket outlets can be supported from Gypframe 99 FC 50 or 150 FC 90 Fixing Channels fixed horizontally between studs, or a high performance socket box detail where higher acoustic performance is required.

Cables should be protected by conduit, or other suitable precautions taken to prevent abrasion when they pass through the metal frame.

Fixing floor and ceiling channels
Gypframe Floor & Ceiling Channels must be securely fixed with a row of fixings at 600mm maximum centres. For 94mm channels and above, two rows of staggered fixings are required, each row at 600mm centres and each fixing 25mm in from the flange. If the floor is uneven, a 38mm thick timber sole plate equal to the width of the channel should be used.

If the concrete or screeded floor is new, consideration should be given to the installation of a damp-proof membrane between the floor surface and the channel or sole plate.

Deflection heads
Performance details apply to fixed head constructions. Partition head deflection designs may be necessary to accommodate deflections in the supporting floor. Deflection heads may also be required to the underside of roof structures subjected to positive and negative pressures.

For special detailing that minimises the loss of acoustic performance:
▶ Refer to **section 3.2.2 – Principles of building acoustics.**

For deflection head design:
▶ Refer to **section 6 – Partition and wall systems, GypWall CLASSIC**, Construction details.

If using as a Robust Detail compliant solution, refer to the Robust Detail Handbook for principles. Further information can be found at www.robustdetails.com

Fixtures
Lightweight fixtures can be made directly to the partitions. Medium weight fixtures can be made to Gypframe 99 FC 50 Fixing Channel. Heavyweight fixtures (to *BS 5234*), such as wash basins and wall cupboards, can be fixed using Gypframe 150 FC 90 Fixing Channel.
▶ Refer to **section 3.5.2 – Service penetrations and fixing into drywall systems**.

Board finishing
▶ Refer to **section 13 – Finishing systems and decorative effects.**

For more information refer to the British Gypsum **SITE** BOOK, available to download from www.british-gypsum.com

▶ Please refer to **section 3 - Basic principles of system design** for general guidance

GypWall QUIET SF

Single frame acoustic separating wall system

This section includes updated information, added since it was first published in July 2009. Please see the WHITE BOOK update document for details.
Last updated 21/01/2011

Ashburn Hotel,
London

GypWall QUIET SF

61 – 65 R_w dB 60 – 120 mins

GypWall QUIET SF is a non-loadbearing partition, which provides high levels of sound insulation up to and exceeding Building Regulations Approved Document E separating wall standards. GypWall QUIET SF also satisfies the requirements of Building Bulletin 93 (Education) and Health Technical Memorandum 08-01. The partition is specified in many types of buildings, both new-build and refurbishment.

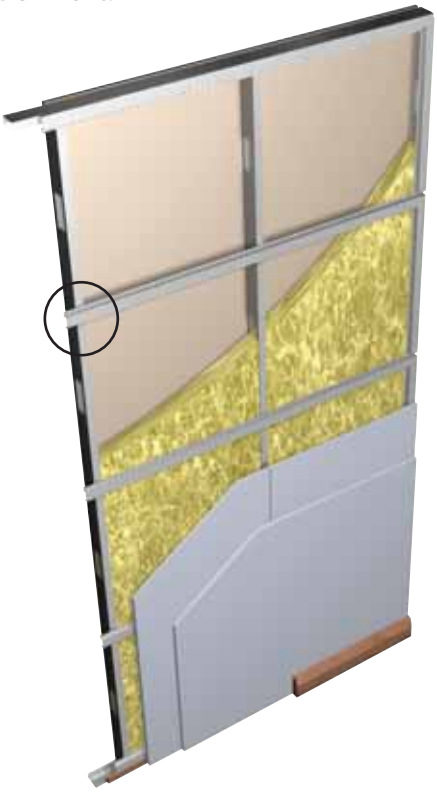

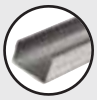

Gypframe 'C' Stud

+

Gypframe RB1 Resilient Bar

Key facts

- Single stud framework, maximising available floor space
- Resilient bars provide improved acoustic separation
- Sound insulation up to R_w + Ctr 59 dB and capable of meeting separating wall requirements
- Satisfies *BS 5234* requirements up to and including Severe Duty[1]
- 60 - 120 minutes fire resistance
- Accommodates services within stud cavity
- Durable, high performance Gyproc linings

[1] Refer to **section 3.4.2 - Principles of robust design**.

Applications

A wide range of separating wall applications, for example between apartments.

Sector

- ✓ Education
- ✓ Healthcare
- ✓ Apartment buildings
- ✓ High-rise multi-occupancy

System components

Gypframe metal products

70 S 50 'C' Stud

Length
2400, 2700mm
3000, 3600mm
4200mm

92 S 50 'C' Stud

Length
3600, 4200mm

146 S 50 'C' Stud

Length
3000, 3600mm
4200mm

Standard Floor & Ceiling Channels
72 C 50
94 C 50
148 C 50
Deep Flange Floor & Ceiling Channel (DC)
72 DC 60
94 DC 60
148 DC 60
Extra Deep Flange Floor & Ceiling Channel (EDC)
72 EDC 80
94 EDC 70
148 EDC 80
All channels are available in 3600mm only.

RB1 Resilient Bar

Length
3000mm

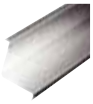

GA5 Internal Fixing Angle

Length
3600mm

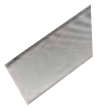

99 FC 50 Fixing Channel

Length
2400mm

150 FC 90 Fixing Channel

Length
1197mm

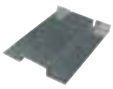

Service Support Plate
For the installation of plywood within a partition cavity.

Length
130mm

GFS1 Fixing Strap

Length
2400mm

Board products

Gyproc WallBoard[1]
Thickness 12.5mm
Width 1200mm

Board products (continued)

Gyproc SoundBloc[1]
Thickness 12.5, 15mm
Width 1200mm

Gyproc Plank
Thickness 19mm
Width 600mm

Gyproc DuraLine[1]
Thickness 15mm
Width 1200mm

Gyproc FireLine[1]
Thickness 15mm
Width 1200mm

[1] Moisture resistant boards are specified in intermittent wet use areas, e.g. shower cubicles.

Fixing and finishing products

Gyproc Wafer Head Drywall Screws
For Gypframe metal-to-metal fixing less than 0.8mm thick ('I' studs less than 0.6mm thick).

Gyproc Drywall Screws
For fixing boards to Gypframe metal framing less than 0.8mm thick ('I' studs less than 0.6mm thick).

Gyproc Sealant
Sealing airpaths for optimum sound insulation.

Gyproc jointing materials
For seamless jointing.

Gyproc edge and angle beads
Protecting and enhancing board edges and corners.

Gyproc Control Joint
To accommodate structural movement.

Gyproc FireStrip
For fire-stopping deflection heads.

Thistle Board Finish or Thistle Multi-Finish
To provide a plaster skim finish.

or

Thistle Durafinish
To provide improved resistance to accidental damage.

Insulation products

Isover APR 1200
50mm, to achieve acoustic performance.

Always use genuine branded British Gypsum components to qualify for **SpecSure®** lifetime warranty

Installation overview

Gypframe Floor & Ceiling Channel is fixed to the floor and soffit. Gypframe studs are fitted vertically to a friction-fit within the channel sections, and to abutments, to form the framework. Studs are fitted to all face the same way.

Gypframe RB1 Resilient Bars are fixed transverse to the stud framing. Select correct length screws to eliminate contact with metal studs when board fixing to Gypframe RB1 Resilient Bar. Bars are joined by nesting them together over a stud, with the base flange fixed to the stud. The bars are normally fixed with the base flange on the top side, with the exception of the uppermost bar, which is fixed base flange down to provide board fixing at the head (see **Construction details – 1**).

Both layers of boards are fixed vertically to the Gypframe RB1 Resilient Bars with joints staggered. Where Gyproc Plank is required as an inner layer fixed to the resilient bar, it is fixed vertically across its width at each bar position.

Openings

Any openings must be constructed with care to maintain the acoustic performance. Specialist heavy acoustic door sets may be required.

For full installation details, refer to the British Gypsum **SITE** BOOK, available to download from www.british-gypsum.com

For full installation details, refer to the British Gypsum **SITE BOOK**, available to download from www.british-gypsum.com

Performance (▶ Refer to **section 3 - Basic principles of system design**)

EN

Table 1a – GypWall QUIET SF 70mm, 92mm and 146mm Gypframe 'C' Studs
Solutions to satisfy the requirements of *BS EN 1364-1: 1999*

1

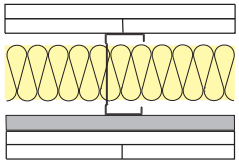

Two layers of board each side of Gypframe 'C' Studs at 600mm centres with Gypframe RB1 Resilient Bar at 600mm centres to one side. 50mm Isover APR 1200 in the cavity. Linings as in table.

2

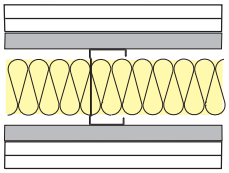

Two layers of board each side of Gypframe 'C' Studs at 600mm centres with Gypframe RB1 Resilient Bar at 600mm centres to both sides. 50mm Isover APR 1200 in the cavity. Linings as in table.

3

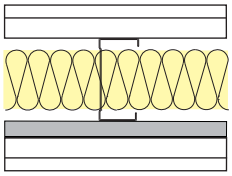

Two layers of board each side of Gypframe 'C' Studs at 600mm centres with Gypframe RB1 Resilient Bar at 600mm centres to one side. 50mm Isover APR 1200 in the cavity. Linings as in table.

Detail	Partition thickness mm	Board type[1]	Lining thickness mm	Stud size mm	Max. partition height[2] mm	Sound insulation R_w (R_w + Ctr) dB	Partition duty	Approx. weight kg/m²	System reference
60 minutes fire resistance EN									
1	137	SoundBloc	2 x 12.5	70	4000	61 (53)	Severe	43	A316008
2	152	SoundBloc	2 x 12.5	70	3200	62 (55)	Severe	43	A316012
1	159	SoundBloc	2 x 12.5	92	5000	61 (53)	Severe	43	A316014
2	174	SoundBloc	2 x 12.5	92	4000	63 (55)	Severe	43	A316015
1	213	SoundBloc	2 x 12.5	146	6800	62 (56)	Severe	43	A316016
2	228	SoundBloc	2 x 12.5	146	5700	64 (58)	Severe	43	A316018
90 minutes fire resistance EN									
1	147	SoundBloc	2 x 15	70	4200	62 (54)	Severe	51	A316009
3	150	Plank + SoundBloc	1 x 19 + 1 x 12.5	70	3700	63 (54)	Severe	54	A316011
2	162	SoundBloc	2 x 15	70	3200	65 (57)	Severe	51	A316013
1	223	SoundBloc	2 x 15	146	5000	62 (57)	Severe	51	A316017
2	238	SoundBloc	2 x 15	146	5000	65 (59)	Severe	51	A316019
120 minutes fire resistance EN									
1	146	FireLine + DuraLine	15 + 15	70	4000	61 (53)	Severe	53	Q606040

[1] For improved durability and impact resistance, the outer layer can be replaced with a layer of 15mm Gyproc DuraLine.
[2] The maximum heights quoted are limited by the fire state field of application or by limiting deflection of L/240 at 200 Pa, whichever is the more onerous.

NB The fire resistance and sound insulation performances are for imperforate partitions, walls and ceilings incorporating boards with all joints taped and filled, or skimmed according to British Gypsum's recommendations. The quoted performances are achieved only if British Gypsum components are used throughout, and the Company's fixing recommendations are strictly observed. Any variation in the specifications should be checked with British Gypsum.

NB For heights between 4200mm and 8000mm, Gypframe Deep Flange Floor & Ceiling Channel should be used at base and at head (subject to deflection criteria).

Table 1b – GypWall QUIET SF 70mm, 92mm and 146mm Gypframe 'C' Studs
Solutions to satisfy the requirements of *BS 476: Part 22: 1987*

1

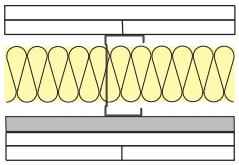

Two layers of board each side of Gypframe 'C' Studs at 600mm centres with Gypframe RB1 Resilient Bar at 600mm centres to one side. 50mm Isover APR 1200 in the cavity. Linings as in table.

2

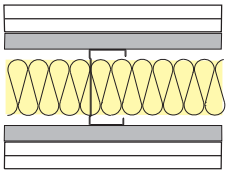

Two layers of board each side of Gypframe 'C' Studs at 600mm centres with Gypframe RB1 Resilient Bar at 600mm centres to both sides. 50mm Isover APR 1200 in the cavity. Linings as in table.

3

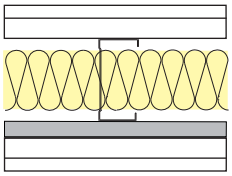

Two layers of board each side of Gypframe 'C' Studs at 600mm centres with Gypframe RB1 Resilient Bar at 600mm centres to one side. 50mm Isover APR 1200 in the cavity. Linings as in table.

Detail	Partition thickness mm	Board type[1]	Lining thickness mm	Stud size mm	Max. partition height[2] mm	Sound insulation R_w (R_w + Ctr) dB	Partition duty	Approx. weight kg/m²	System reference
60 minutes fire resistance BS									
1	137	SoundBloc	2 x 12.5	70	4000	61 (53)	Severe	43	A316008
2	152	SoundBloc	2 x 12.5	70	3200	62 (55)	Severe	43	A316012
1	159	SoundBloc	2 x 12.5	92	5000	61 (53)	Severe	43	A316014
2	174	SoundBloc	2 x 12.5	92	4000	63 (55)	Severe	43	A316015
1	213	SoundBloc	2 x 12.5	146	6800	62 (56)	Severe	43	A316016
2	228	SoundBloc	2 x 12.5	146	5700	64 (58)	Severe	43	A316018
90 minutes fire resistance BS									
1	147	SoundBloc	2 x 15	70	4200	62 (54)	Severe	51	A316009
3	150	Plank + WallBoard	1 x 19 + 1 x 12.5	70	3700	61 (53)	Severe	49	A316010
3	150	Plank + SoundBloc	1 x 19 + 1 x 12.5	70	3700	63 (54)	Severe	54	A316011
2	162	SoundBloc	2 x 15	70	3200	65 (57)	Severe	51	A316013
1	223	SoundBloc	2 x 15	146	6900	62 (57)	Severe	51	A316017
2	238	SoundBloc	2 x 15	146	5700	65 (59)	Severe	51	A316019
120 minutes fire resistance BS									
1	146	FireLine + DuraLine	15 + 15	70	4200	61 (53)	Severe	53	Q606040

[1] For improved durability and impact resistance, the outer layer can be replaced with a layer of 15mm Gyproc DuraLine.
[2] Based on a limiting deflection of L/240 at 200 Pa.

NB The fire resistance and sound insulation performances are for imperforate partitions, walls and ceilings incorporating boards with all joints taped and filled, or skimmed according to British Gypsum's recommendations. The quoted performances are achieved only if British Gypsum components are used throughout, and the Company's fixing recommendations are strictly observed. Any variation in the specifications should be checked with British Gypsum.

NB For heights between 4200mm and 8000mm, Gypframe Deep Flange Floor & Ceiling Channel should be used at base and at head (subject to deflection criteria).

Design

Planning - key factors
The position of services and heavy fixtures should be pre-determined and their installation planned into the frame erection stage. Timber sole plates should be considered where the floor is uneven. All penetrations will need to be adequately fire-stopped.
▶ Refer to **section 3.5 – Service installations.**

Cavity barriers
Stone mineral wool cut neatly to fit across the cavity forms a suitable closure.

Acoustic performance
The partition achieves high levels of sound insulation by virtue of the separation between the board and the stud framing afforded by the Gypframe RB1 Resilient Bars. It is important that, when screw-fixing boards, the screws do not contact the stud framing and also that services, fixtures, etc, do not form a bridge between the lining boards on each side of the partition.

For optimum performance all air paths should be sealed. Gyproc Sealant should be applied to the perimeter of the inner layer immediately prior to fitting the face layer board on the side(s) of the partition where resilient bars are located.

Fixing floor and ceiling channels
Gypframe Floor & Ceiling Channels must be securely fixed with a row of fixings at 600mm maximum centres. For 94mm channels and above, two rows of staggered fixings are required, each row at 600mm centres and each fixing 25mm in from the flange. If the floor is uneven, a 38mm thick timber sole plate equal to the width of the channel should be used.

If the concrete or screeded floor is new, consideration should be given to the installation of a damp-proof membrane between the floor surface and the channel or sole plate.

Deflection heads
Partition head deflection designs may be necessary to accommodate deflections in the supporting floor. Deflection heads may also be required to the underside of roof structures subjected to positive and negative pressures.

The partitions can incorporate head deflection designs with only a slight reduction in sound insulation performance. See **Construction details – 3**.
▶ Refer to **section 3.2.2 – Principles of building acoustics.**

Services
Penetrations
Penetrations within the constructions for services need careful consideration to ensure that the sound insulation and fire integrity of the element are not impaired and also that the services themselves do not act as the mechanism of fire spread.
▶ Refer to **section 3.5 – Service installations.**

Independent support
When designing for the installation of services such as fire dampers and associated ductwork through a **GypWall** partition, consideration should be given to the size and weight of the damper - this will determine whether it can be supported directly from the partition or needs to be independently supported from the structure.
▶ Refer to **section 3.5 – Service installations.**

Electrical
The installation of electrical services should be carried out in accordance with *BS 7671*. The cut-outs in the studs can be used for routing electrical and other small services (see **GypWall CLASSIC Construction details – 1**). Switch boxes and socket outlets can be supported from Gypframe 99 FC 50 or 150 FC 90 Fixing Channels fixed horizontally between studs, or a high performance socket box detail where higher acoustic performance is required.

Cables should be protected by conduit, or other suitable precautions taken to prevent abrasion when they pass through the metal frame.

Door openings
Any openings will require very careful detailing if the acoustic performance of the partition is to be maintained. Specialist heavy acoustic doorsets may require additional support.

Fixtures
Lightweight fixtures can be made directly to the partitions. Medium weight fixtures can be made to Gypframe 99 FC 50 Fixing Channel. Heavyweight fixtures (to *BS 5234*), such as wash basins and wall cupboards, can be fixed using Gypframe 150 FC 90 Fixing Channel. In all instances the Fixing Channel is fixed to the side without Resilient Bar.

Medium and heavy weight fixings can only be made when the lining boards are fixed directly to the stud framing. The installation of fixings may downgrade the acoustic performance of the wall - see also 'Acoustic performance' earlier.
▶ Refer to **section 3.5.2 – Service penetrations and fixing into drywall systems**.

Board finishing
▶ Refer to **section 13 – Finishing systems and decorative effects.**

For more information refer to the British Gypsum **SITE** BOOK, available to download from www.british-gypsum.com

▶ Please refer to **section 3 - Basic principles of system design** for general guidance

Construction details

1 Head and base

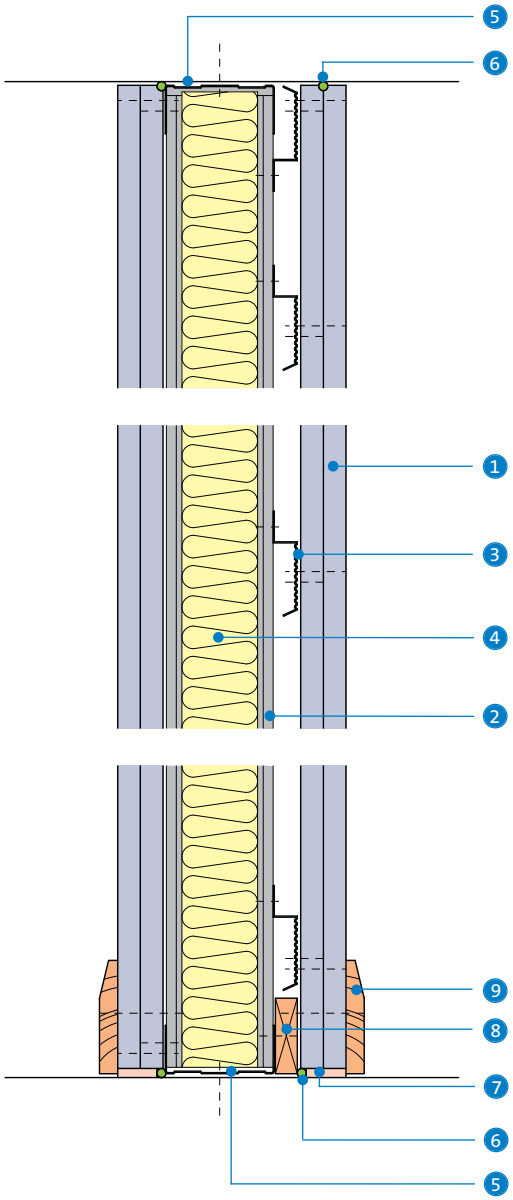

2 Junction with masonry

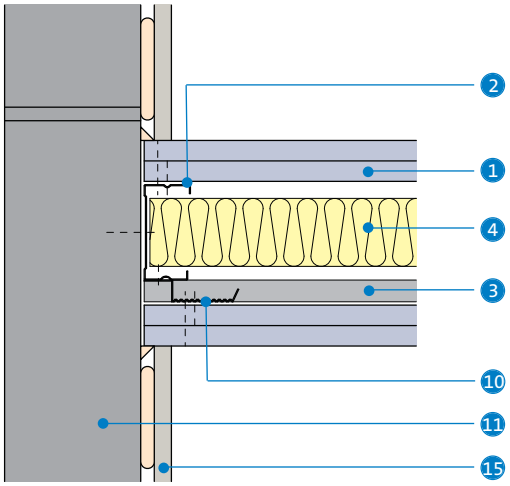

3 Deflection head for 15mm downward movement and 60 minutes fire resistance

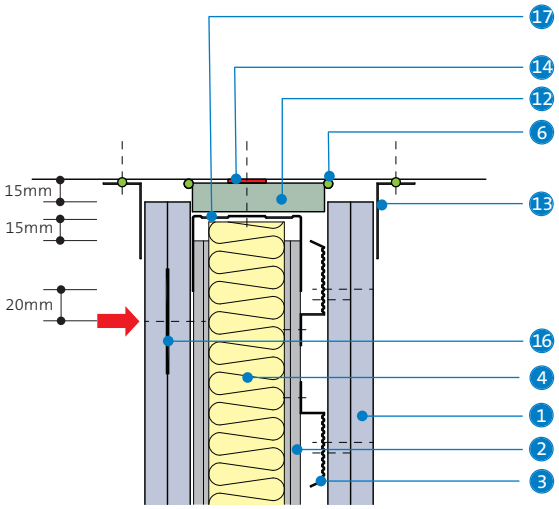

1. Gyproc plasterboard
2. Gypframe 'C' Stud
3. Gypframe RB1 Resilient Bar
4. Isover insulation
5. Gypframe Standard Floor & Ceiling Channel
6. Gyproc Sealant
7. Bulk fill with Gyproc jointing materials (where gap exceeds 5mm)
8. Timber packer (16 x 50mm)
9. Skirting
10. Vertical Gypframe RB1 Resilient Bar noggings
11. Blockwork
12. Gyproc CoreBoard
13. Gypframe Steel Angle
14. Gyproc Fire Strip
15. **DriLyner BASIC** wall lining system
16. Gypframe GFS1 Fixing Strap
17. Gypframe Deep Flange Floor & Ceiling Channel suitably fixed through fire-stop to structure

NB The board fixings should be made into the head channel. The arrow (➡) denotes the uppermost board fixing, which should be made into Gypframe GFS1 Fixing Strap. Continuous Gyproc Fire Strip must be installed as shown to maintain fire performances.

4 Internal / external corner - resilient bar to external corner

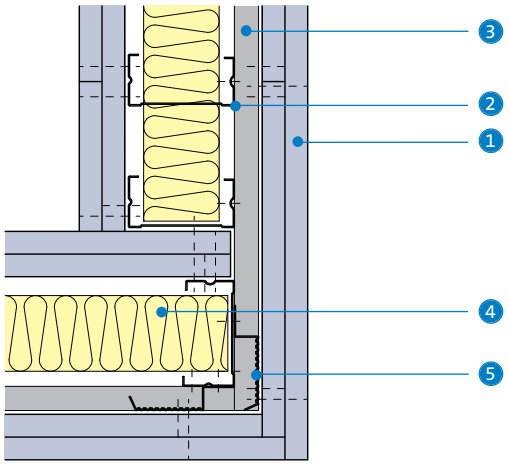

5 Internal / external corner - resilient bar to internal corner

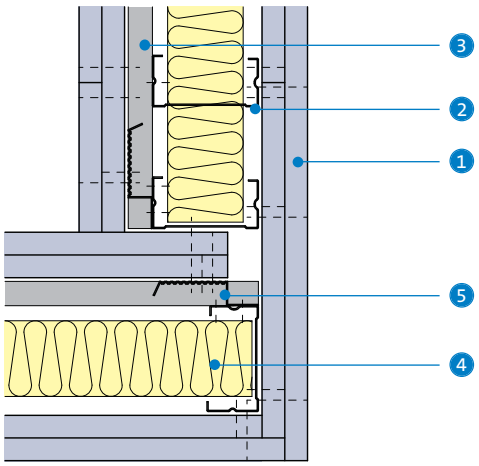

6 'T' junction (resilient bar on opposite side)

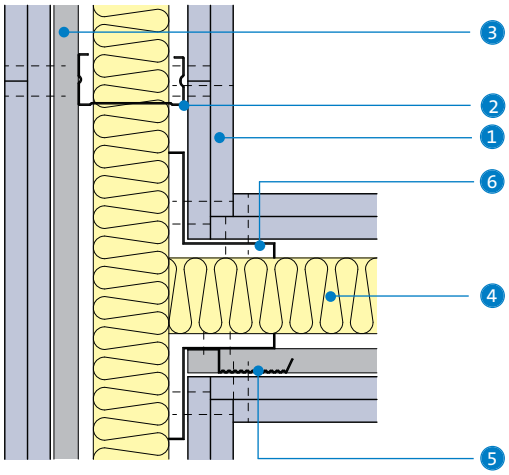

7 'T' junction (resilient bar on abutment side)

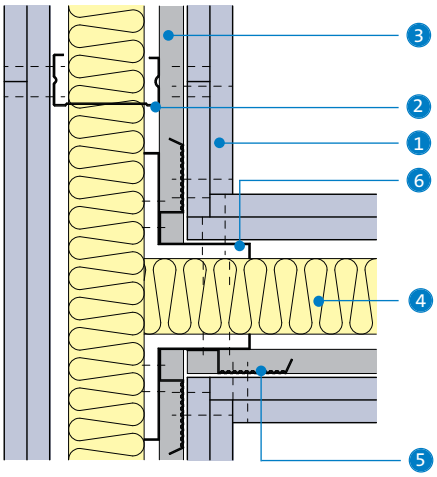

1. Gyproc plasterboard
2. Gypframe 'C' Stud
3. Gypframe RB1 Resilient Bar
4. Isover insulation
5. Vertical Gypframe RB1 Resilient Bar nogging
6. Gypframe GA5 Internal Fixing Angle

8 Door frame to satisfy *BS 5234: Parts 1 and 2: 1992 - Light and Medium Duty*

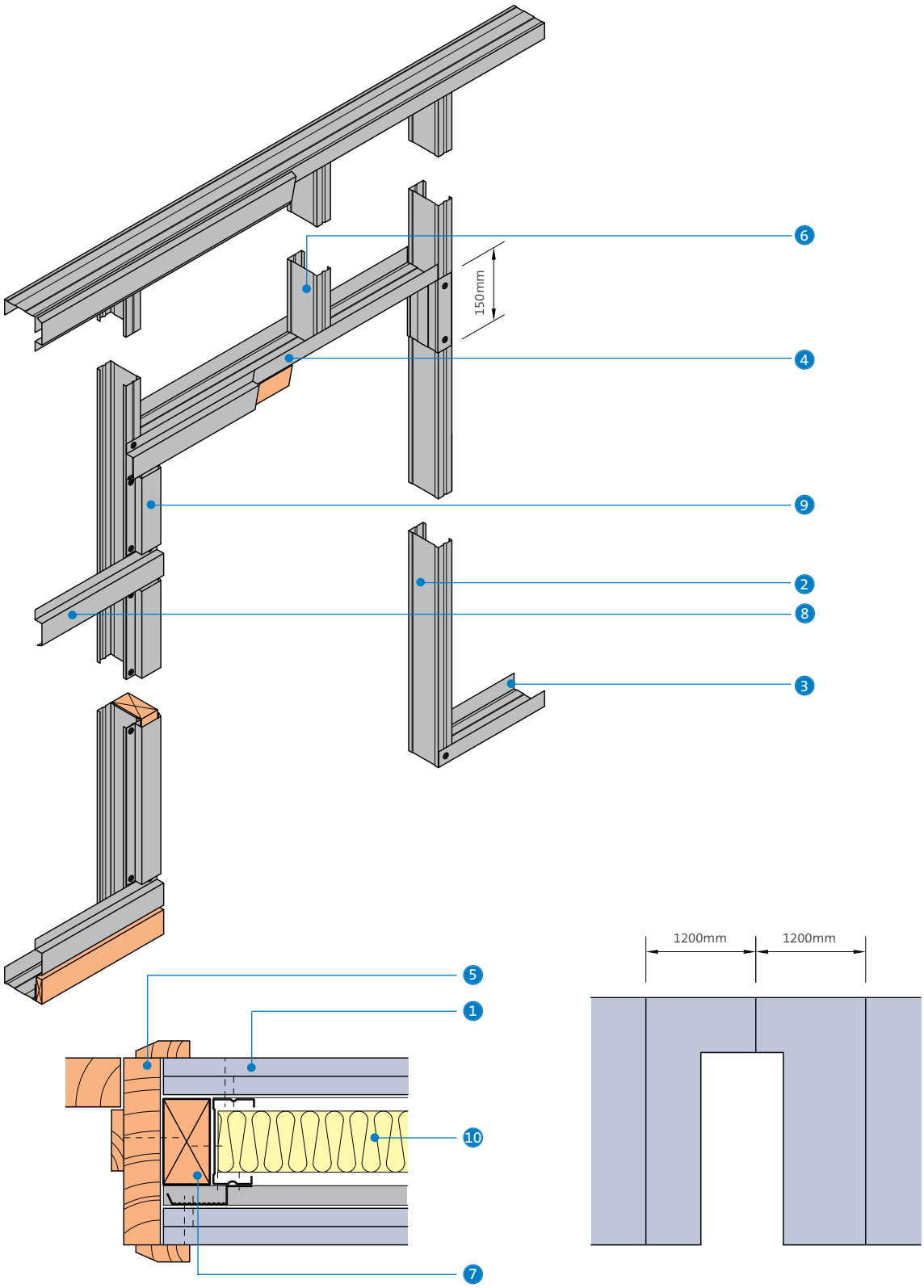

1. Gyproc plasterboard
2. Gypframe 'C' Stud
3. Gypframe Standard Floor & Ceiling Channel
4. Gypframe Standard Floor & Ceiling Channel cut and bent to form door head
5. Timber door frame and architrave
6. Gypframe 'C' Stud to maintain stud module
7. Timber sub-frame
8. Gypframe RB1 Resilient Bar
9. Gypframe RB1 Resilient Bar vertical nogging
10. Isover insulation

NB Advice should be sought from the door manufacturer prior to the construction of these details.

9 Door frame to satisfy *BS 5234: Parts 1 and 2: 1992 - Heavy and Severe Duty*

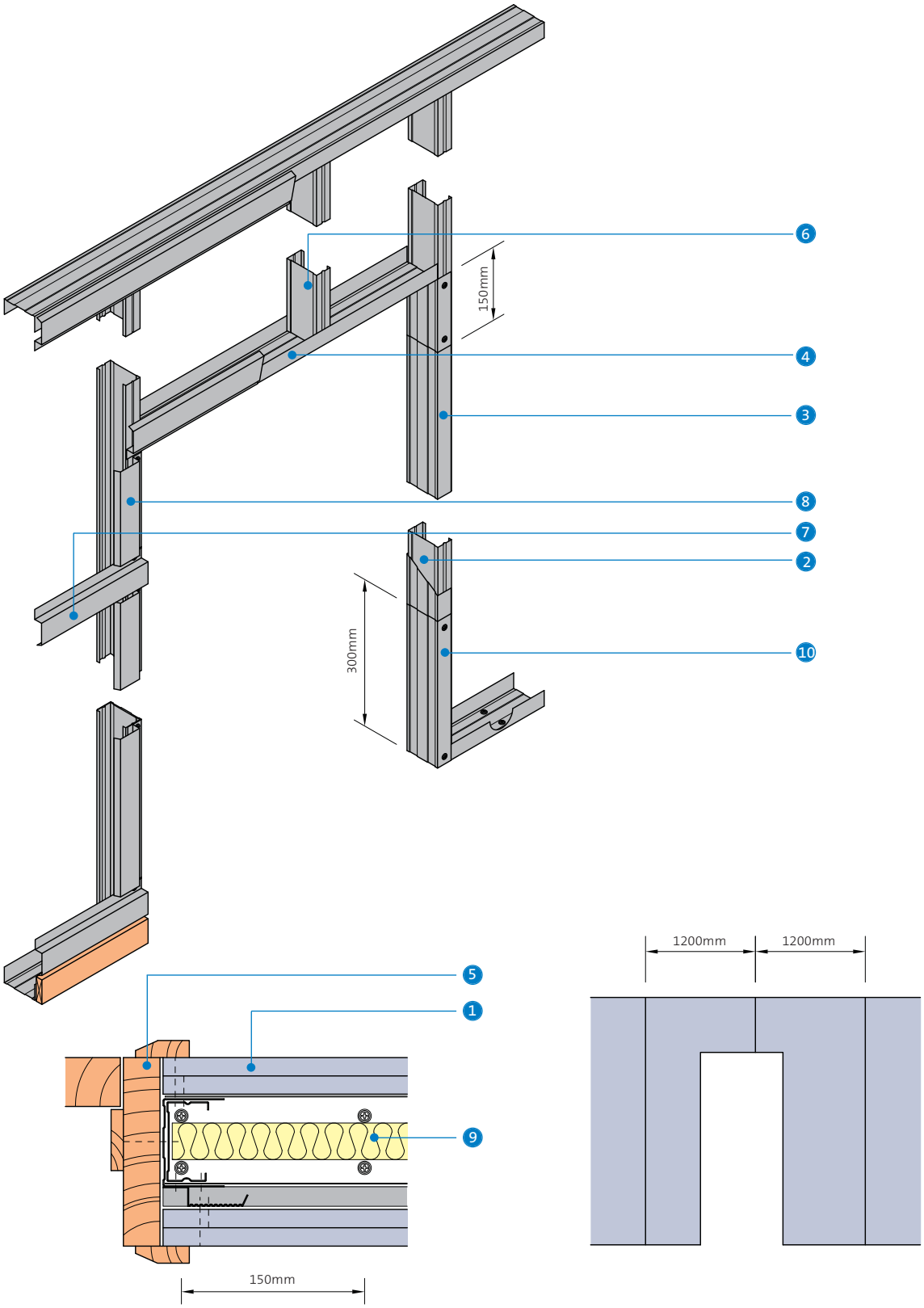

1. Gyproc plasterboard
2. Gypframe 'C' Stud
3. Gypframe Standard Floor & Ceiling Channel to sleeve studs
4. Gypframe Standard Floor & Ceiling Channel cut and bent to form door head
5. Timber door frame and architrave
6. Gypframe 'C' Stud to maintain stud module
7. Gypframe RB1 Resilient Bar
8. Gypframe RB1 Resilient Bar vertical nogging
9. Isover insulation
10. Gypframe Standard Floor & Ceiling Channel cut and bent to extend up studs

NB Advice should be sought from the door manufacturer prior to the construction of these details.

NB At the base, the channel is cut and bent to extend 300mm up the studs and fixed each side with two Gyproc Wafer Head Drywall Screws. The studs each side of the opening are sleeved full height of opening with Gypframe Standard Floor & Ceiling Channel.

GypWall STAGGERED

Staggered stud acoustic partition system

This section includes updated information, added since it was first published in July 2009. Please see the WHITE BOOK update document for details.
Last updated 01/04/2010

The Sage, Gateshead

GypWall STAGGERED

49 – 63 R_w dB

30 – 90 mins

GypWall STAGGERED is a non-loadbearing stud partition, which provides very high levels of sound insulation. Designed for use in apartments, offices, hotels, schools, hospitals, recreational complexes, shops, and conference centres with high acoustic requirements, in situations where space is at a premium.

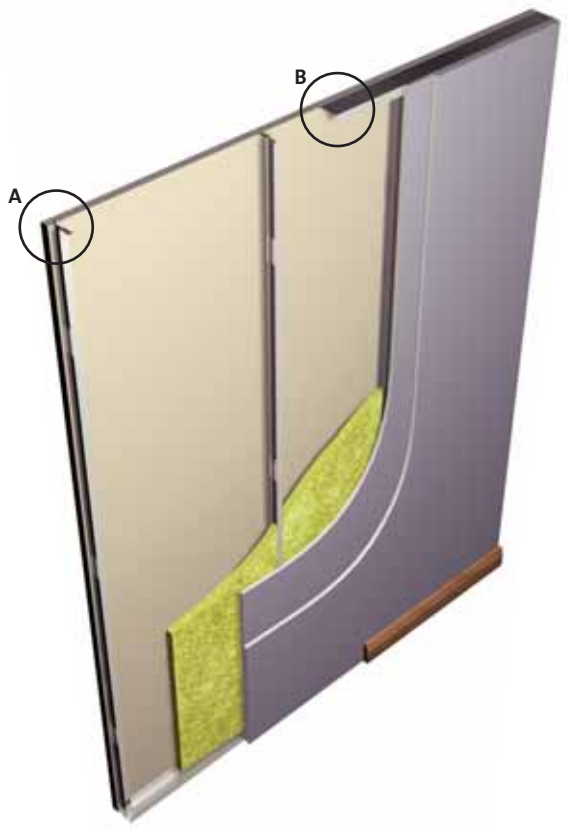

A Gypframe 'I' Stud

Gypframe Spacer Clip

B Gypframe Floor & Ceiling Channel

Key facts

- De-coupled framing for increased structural isolation
- Choice of framing sizes to suit range of performance requirements
- Achieves very high levels of sound insulation at a minimal partition width
- Satisfies *BS 5234* requirements up to and including Severe Duty[1]
- Easy to install noggings
- Up to 90 minutes fire resistance
- Single and double board lining solutions

[1] Refer to **section 3.4.2 - Principles of robust design**.

Applications

A wide range of applications, for example hotel division walls, student accommodation and refurbishment projects.

Sector

✓ **Office / commercial**

✓ **Apartment buildings**

✓ **High-rise multi-occupancy**

System components

Gypframe metal products

60 I 70 'I' Stud
Used with 72mm Gypframe Floor & Ceiling Channel to form 60/72 combination.

Length
3600, 4200mm

92 I 90 'I' Stud
Used with 148mm Gypframe Floor & Ceiling Channel to form 92/148 combination.

Length
3600, 5000, 6000mm

For abutments and openings only

70 S 50 'C' Stud

Length
2400, 2700, 3000mm
3600, 4200mm

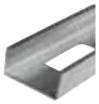

146 S 50 'C' Stud

Length
3000, 3600, 4200mm

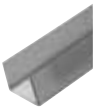

Floor & Ceiling Channels
Standard, Deep Flange (DC) and Extra Deep Flange (EDC) Floor & Ceiling Channels.
All channels are available in 3600mm only.

SC1 Spacer Clip (used in 60 / 72 combination)
SC2 Spacer Clip (used in 92 / 148 combination)

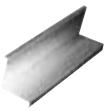

GA5 Internal Fixing Angle
Prime dimensions 60mm x 60mm

99 FC 50
Fixing Channel

Length
2400mm

150 FC 90
Fixing Channel

Length
1197mm

GFS1 Fixing Strap

Length
2400mm

or

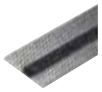

GFT1 Fixing 'T'

Length
2400mm

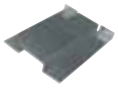

Service Support Plate
For the installation of plywood within a partition cavity.

Length
130mm

Board products

Gyproc SoundBloc[1]

Thickness	12.5, 15mm
Width	1200mm

Gyproc DuraLine[1]

Thickness	15mm
Width	1200mm

[1] Moisture resistant boards are specified in intermittent wet use areas, e.g. shower cubicles.

Fixing and finishing products

Gyproc Wafer Head Drywall Screws
For Gypframe metal-to-metal fixing less than 0.8mm thick ('I' studs less than 0.6mm thick).

Gyproc Wafer Head Jack-Point Screws
For Gypframe metal-to-metal fixing 0.8mm thick or greater ('I' studs 0.6mm thick and greater).

Gyproc Drywall Screws
For fixing boards to Gypframe metal framing less than 0.8mm thick ('I' studs less than 0.6mm thick).

Gyproc Jack-Point Screws
For fixing boards to Gypframe metal framing 0.8mm thick or greater ('I' studs 0.6mm thick and greater).

Gyproc Sealant
Sealing air paths for optimum sound insulation.

Gyproc jointing materials
For seamless jointing.

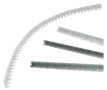

Gyproc edge and angle beads
Protecting and enhancing board edges and corners.

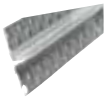

Gyproc Control Joint
To accommodate structural movement.

Gyproc FireStrip
For fire-stopping deflection heads.

Thistle Board Finish or Thistle Multi-Finish
To provide a plaster skim finish.

or

Thistle Durafinish
To provide improved resistance to accidental damage.

Insulation products

Isover APR 1200
25mm or 50mm, to achieve acoustic performance.

Always use genuine branded British Gypsum components to qualify for **SpecSure**® lifetime warranty

Installation overview

Gypframe Floor & Ceiling Channel is fixed to the floor and soffit. Gypframe 'I' Studs are fitted vertically into the channel sections and held in place by spacer clips, alternate studs are staggered (offset). As the spacer clips are friction-fitted this allows for stud adjustment during boarding. Gypframe 'C' Studs are fixed at abutments. Isover insulation is fitted between studs and the perimeter sealed using Gyproc Sealant prior to boarding.

Boards are screw-fixed to form a lining. Horizontal board joints of face layer boards should be backed with Gypframe GFS1 Fixing Strap (single or double layer) or Gypframe GFT1 Fixing 'T' (single layer only).

Openings

Openings must be constructed with care to maintain the acoustic performance. Specialist heavy acoustic door sets may be required.

Services

Electrical and other services are normally installed after one side is boarded. Horizontal runs are routed through cut-outs in the studs. Gypframe 99 FC 50 Fixing Channel is installed between studs to support recessed switch boxes / socket outlets, or a high performance socket box detail used where higher acoustic performance is required.

Noggings can be cut to fit neatly between Gypframe 'I' Studs and screw-fixed into position through the stud flange.

For full installation details, refer to the British Gypsum **SITE** BOOK, available to download from www.british-gypsum.com

For full installation details, refer to the British Gypsum **SITE BOOK**, available to download from www.british-gypsum.com

Performance (▶ Refer to **section 3 - Basic principles of system design**)

EN

Table 1a – GypWall STAGGERED 60 / 72 and 92 / 148 combinations
Solutions to satisfy the requirements of *BS EN 1364-1: 1999*

1

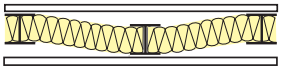

60 / 72 combination

Two rows of Gypframe 60 I 70 'I' Studs in Gypframe 72 C 50 Standard Floor & Ceiling Channel. Gypframe SC1 Spacer Clips and alternate studs staggered in the channel at 300mm centres. Linings and insulation as in table.

2

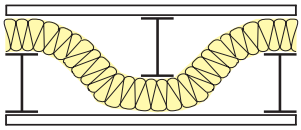

92 / 148 combination

Two rows of Gypframe 92 I 90 'I' Studs in Gypframe 148 DC 60 Deep Flange Floor & Ceiling Channel. Gypframe SC2 Spacer Clips and alternate studs staggered in the channel at 300mm centres. Linings and insulation as in table.

3

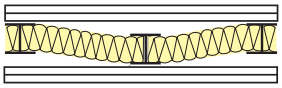

60 / 72 combination

Two rows of Gypframe 60 I 70 'I' Studs in Gypframe 72 C 50 Standard Floor & Ceiling Channel. Gypframe SC1 Spacer Clips and alternate studs staggered in the channel at 300mm centres. Linings and insulation as in table.

4

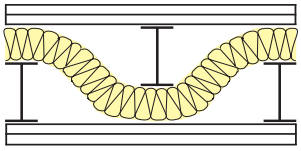

92 / 148 combination

Two rows of Gypframe 92 I 90 'I' Studs in Gypframe 148 DC 60 Deep Flange Floor & Ceiling Channel. Gypframe SC2 Spacer Clips and alternate studs staggered in the channel at 300mm centres. Linings and insulation as in table.

Detail	Partition thickness mm	Board type[1]	Lining thickness mm	Approx. weight kg/m²	Max. partition height[2] mm	Sound insulation[3] R_w (R_w + Ctr) dB 25mm[4]	50mm[4]	Partition duty	System reference
30 minutes fire resistance EN									
1	102	SoundBloc	1 x 15	28	3300	49	52	Heavy	A233001/021
2	178	SoundBloc	1 x 15	28	5400	53	55	Heavy	A233006/026
60 minutes fire resistance EN									
3	122	SoundBloc	2 x 12.5	44	3600	57	59 (48)	Severe	A233002/022
4	198	SoundBloc	2 x 12.5	44	5700	61 (51)	62 (53)	Severe	A233007/027
90 minutes fire resistance EN									
3	132	SoundBloc	2 x 15	53	3900	59 (49)	61 (53)	Severe	A233003/023
4	208	SoundBloc	2 x 15	53	5000	62 (54)	63 (55)	Severe	A233008/028

[1] For improved durability and impact resistance, the outer layer of Gyproc SoundBloc can be replaced with a layer of 15mm Gyproc DuraLine. On single layer linings this will improve duty rating to Severe Duty.
[2] The maximum heights quoted are limited by the fire state field of application or by limiting deflection of L/240 at 200 Pa, whichever is the more onerous.
[3] Sound insulation performance guidance for residential specification shown below:
[4] Isover APR 1200 insulation.

	Approved Document E requirement D_{nTw} + Ctr dB	Minimum solution[5] (R_w + Ctr) dB	Recommended solution[5] (R_w + Ctr) dB
Conversions	43	(47)	(52)
New-build	45	(49)	(54)

[5] Minimum solutions provide little or no margin of safety to allow for reductions in performance due to flanking transmission. Recommended solutions have greater potential to satisfy the requirements of Building Regulations Approved Document E.

NB The fire resistance and sound insulation performances are for imperforate partitions, walls and ceilings incorporating boards with all joints taped and filled, or skimmed according to British Gypsum's recommendations. The quoted performances are achieved only if British Gypsum components are used throughout, and the Company's fixing recommendations are strictly observed. Any variation in the specifications should be checked with British Gypsum.

Table 1b – GypWall STAGGERED 60 / 72 and 92 / 148 combinations
Solutions to satisfy the requirements of *BS 476: Part 22: 1987*

1

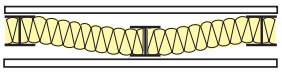

60 / 72 combination

Two rows of Gypframe 60 I 70 'I' Studs in Gypframe 72 C 50 Standard Floor & Ceiling Channel. Gypframe SC1 Spacer Clips and alternate studs staggered in the channel at 300mm centres. Linings and insulation as in table.

2

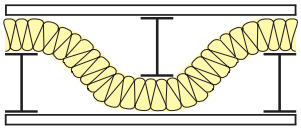

92 / 148 combination

Two rows of Gypframe 92 I 90 'I' Studs in Gypframe 148 DC 60 Deep Flange Floor & Ceiling Channel. Gypframe SC2 Spacer Clips and alternate studs staggered in the channel at 300mm centres. Linings and insulation as in table.

3

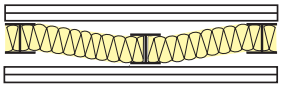

60 / 72 combination

Two rows of Gypframe 60 I 70 'I' Studs in Gypframe 72 C 50 Standard Floor & Ceiling Channel. Gypframe SC1 Spacer Clips and alternate studs staggered in the channel at 300mm centres. Linings and insulation as in table.

4

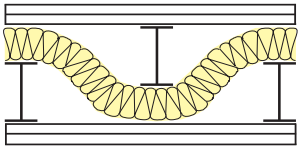

92 / 148 combination

Two rows of Gypframe 92 I 90 'I' Studs in Gypframe 148 DC 60 Deep Flange Floor & Ceiling Channel. Gypframe SC2 Spacer Clips and alternate studs staggered in the channel at 300mm centres. Linings and insulation as in table.

Detail	Partition thickness mm	Board type[1]	Lining thickness mm	Approx. weight kg/m²	Max. partition height[2] mm	Sound insulation[3] R_w (R_w + Ctr) dB 25mm[4]	50mm[4]	Partition duty	System reference
30 minutes fire resistance BS									
1	102	SoundBloc	1 x 15	28	3300	49	52	Heavy	A233001/021
2	178	SoundBloc	1 x 15	28	5400	53	55	Heavy	A233006/026
60 minutes fire resistance BS									
3	122	SoundBloc	2 x 12.5	44	3600	57	59	Severe	A233002/022
4	198	SoundBloc	2 x 12.5	44	5700	61 (51)	62 (53)	Severe	A233007/027
90 minutes fire resistance BS									
3	132	SoundBloc	2 x 15	53	3900	59 (49)	61 (53)	Severe	A233003/023
4	208	SoundBloc	2 x 15	53	6000	62 (54)	63 (55)	Severe	A233008/028

[1] For improved durability and impact resistance, the outer layer of Gyproc SoundBloc can be replaced with a layer of 15mm Gyproc DuraLine. On single layer linings this will improve duty rating to Severe Duty.
[2] Based on a limiting deflection of L/240 at 200 Pa.
[3] Sound insulation performance guidance for residential specification shown below:
[4] Isover APR 1200 insulation.

	Approved Document E requirement D_{nTw} + Ctr dB	Minimum solution[5] (R_w + Ctr) dB	Recommended solution[5] (R_w + Ctr) dB
Conversions	43	(47)	(52)
New-build	45	(49)	(54)

[5] Minimum solutions provide little or no margin of safety to allow for reductions in performance due to flanking transmission. Recommended solutions have greater potential to satisfy the requirements of Building Regulations Approved Document E.

NB The fire resistance and sound insulation performances are for imperforate partitions, walls and ceilings incorporating boards with all joints taped and filled, or skimmed according to British Gypsum's recommendations. The quoted performances are achieved only if British Gypsum components are used throughout, and the Company's fixing recommendations are strictly observed. Any variation in the specifications should be checked with British Gypsum.

Design

Planning - key factors
The position of services and heavy fixtures should be pre-determined and their installation planned into the frame erection stage.
▶ Refer to **section 3.5 – Service installations.**

Cavity fire barriers
Stone mineral wool cut neatly to fit across the cavity forms a suitable closure.

Acoustic performance
The partition achieves high levels of sound insulation by virtue of the separation between the two rows of studs. It is important that this isolation is maintained, and that services, fixtures, etc, do not form a bridge between the two linings.

Fixing floor and ceiling channels
Gypframe Floor & Ceiling Channels must be securely fixed with a row of fixings at 600mm maximum centres. For 94mm channels and above, two rows of staggered fixings are required, each row at 600mm centres and each fixing 25mm in from the flange. If the floor is uneven, a 38mm thick timber sole plate equal to the width of the channel should be used.

If the concrete or screeded floor is new, consideration should be given to the installation of a damp-proof membrane between the floor surface and the channel or sole plate.

Deflection heads
Performance details apply to fixed head constructions. Partition head deflection designs may be necessary to accommodate deflections in the supporting floor. Deflection heads may also be required to the underside of roof structures subjected to positive and negative pressures.

For deflection head design:
▶ Refer to **section 6 – Partition and wall systems, GypWall CLASSIC, Construction details.**

The partitions can incorporate head deflection designs with only a slight reduction in sound insulation performance. See **Construction details – 2 - 3**.
▶ Refer to **section 3.2.2 – Principles of building acoustics.**

Services
Penetrations
Penetrations with the constructions for services need careful consideration to ensure that the integrity of the element is not impaired and also that the services themselves do not act as the mechanism of fire spread.
▶ Refer to **section 3.5 – Service installations.**

Independent support
When designing for the installation of services such as fire dampers and associated ductwork through a **GypWall** partition, consideration should be given to the size and weight of the damper - this will determine whether it can be supported directly from the partition or needs to be independently supported from the structure.
▶ Refer to **section 3.5 – Service installations.**

Electrical
The installation of electrical services should be carried out in accordance with *BS 7671*. The cut-outs in the studs can be used for routing electrical and other small services (see **GypWall CLASSIC Construction details – 1**). Switch boxes and socket outlets can be supported from Gypframe 99 FC 50 or 150 FC 90 Fixing Channels fixed horizontally between studs, or a high performance socket box detail where higher acoustic performance is required.

Door openings
Any openings will require careful detailing if the acoustic performance of the partition is to be maintained. Specialist heavy acoustic doorsets may require additional support.

The designer should consider thickness tolerances of the partition types in relation to the proposed door frame detail. For standard door frame detailing to suit *BS 5234* Light and Medium Duty applications, and detailing to satisfy *BS 5234* requirements for Heavy and Severe Duty, refer to **GypWall CLASSIC Construction details** section. Additional provision is required to support heavy doorsets. The door manufacturer should also be consulted in relation to door details.

Fixtures
Lightweight fixtures can be made directly to the partitions. Medium weight fixtures can be made to Gypframe 99 FC 50 Fixing Channel. Heavyweight fixtures (to *BS 5234*), such as wash basins and wall cupboards, can be fixed using Gypframe 150 FC 90 Fixing Channel.
▶ Refer to **section 3.5.2 – Service penetrations and fixing into drywall systems**.

Board finishing
▶ Refer to **section 13 – Finishing systems and decorative effects.**

For more information refer to the British Gypsum **SITE** BOOK, available to download from www.british-gypsum.com

Construction details (60 / 72 combination illustrated)

1 Head and base

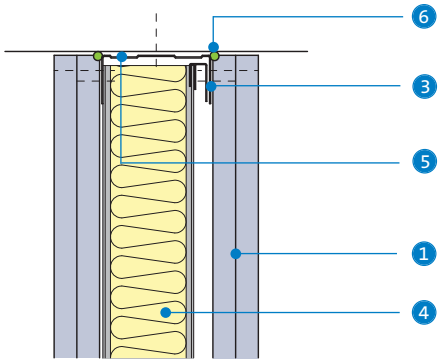

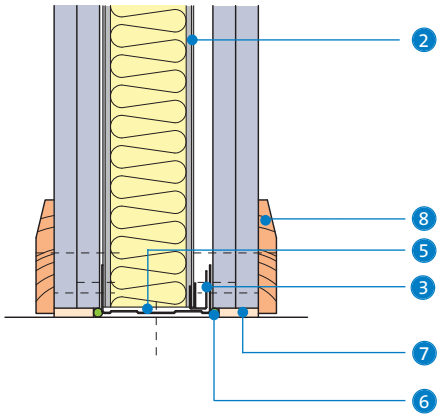

2 Deflection head for 15mm downward movement and 60 minutes fire resistance

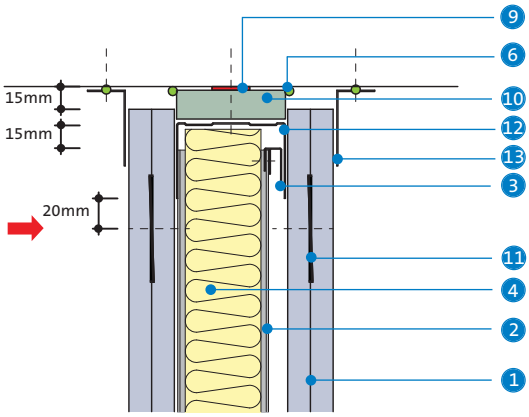

3 Deflection head for ± 25mm movement and 60 minutes fire resistance

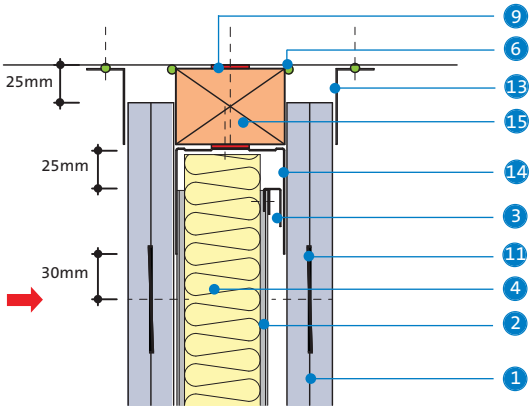

4 Clip attachment

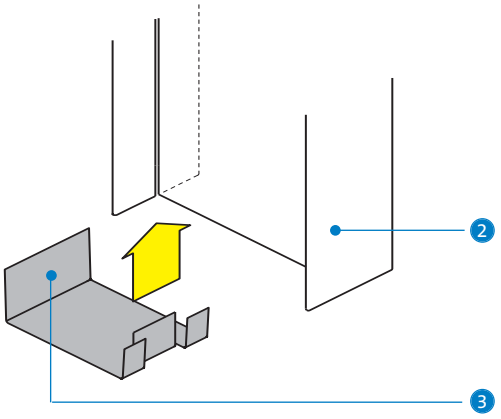

1. Gyproc SoundBloc
2. Gypframe 'I' Stud
3. Gypframe Spacer Clip
4. Isover insulation
5. Gypframe Floor & Ceiling Channel
6. Gyproc Sealant
7. Bulk fill with Gyproc jointing materials (where gap exceeds 5mm)
8. Skirting
9. Gyproc FireStrip
10. Gyproc CoreBoard
11. Gypframe GFS1 Fixing Strap
12. Gypframe Deep Flange Floor & Ceiling Channel suitably fixed through fire-stop to structure
13. Gypframe Steel Angle
14. Gypframe Extra Deep Flange Floor & Ceiling Channel fixed to timber head plate
15. Timber head plate suitably fixed to structure

NB No board fixings should be made into the head channel. The arrow (➡) denotes the uppermost board fixing, which should be made into Gypframe GFS1 Fixing Strap. Continuous Gyproc FireStrip must be installed as shown in order to maintain fire performance. Gypframe Steel Angle or approved decorative trim (by others) should be fixed to the soffit either side of the partition as shown to maintain the acoustic performance. Where ± deflection is a requirement, Gypframe SC1 or SC2 Spacer Clips must be pre-fixed to the 'I' studs to avoid the risk of disengagement once deflection is taken up.

5 Junction with masonry

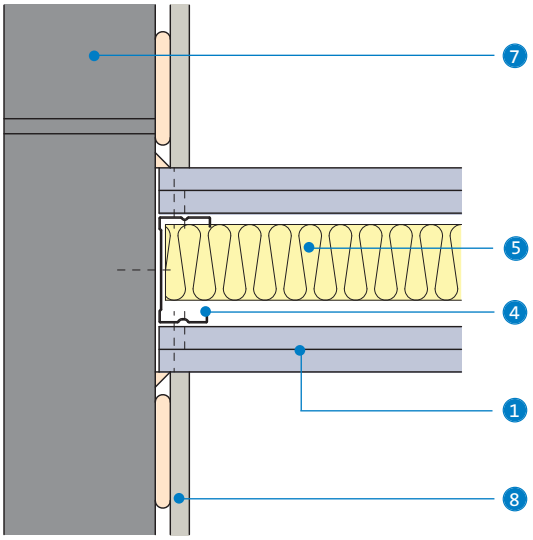

6 Internal / external corner

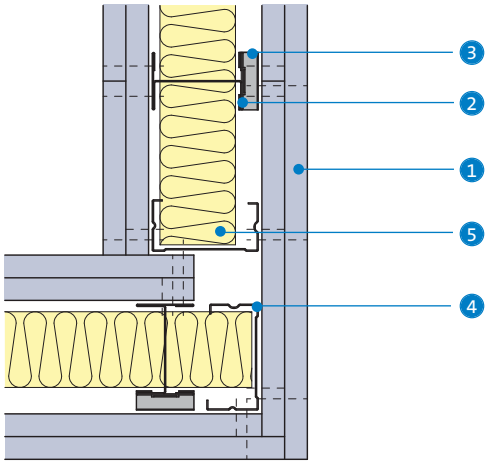

7 'T' junction

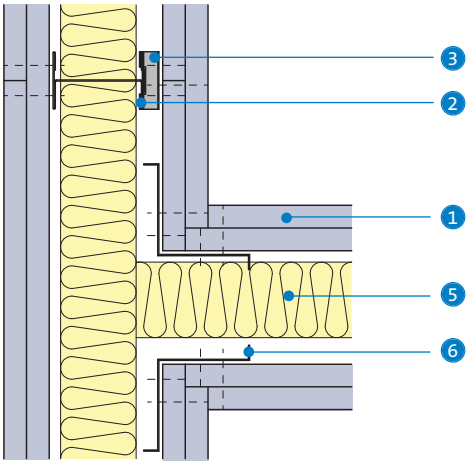

8 Intermediate studs (60 / 72 series)

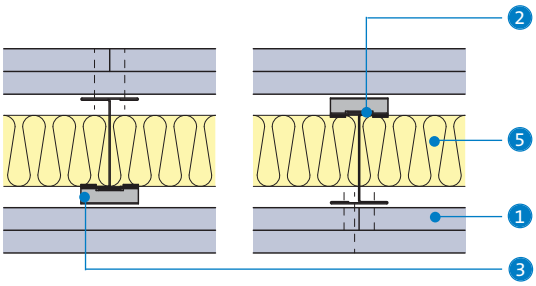

9 Intermediate studs (92 / 148 series)

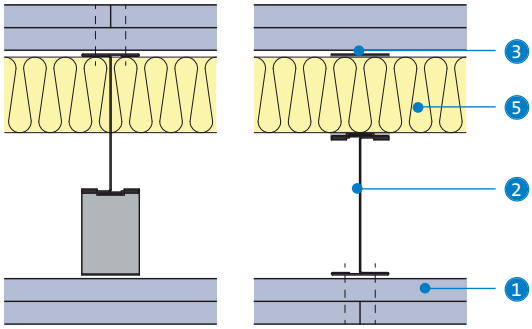

1. Gyproc SoundBloc
2. Gypframe 'I' Stud
3. Gypframe Spacer Clip
4. Gypframe 'C' Stud
5. Isover APR 1200
6. Gypframe GA5 Internal Fixing Angle
7. Blockwork
8. **DriLyner BASIC** wall lining system

GypWall AUDIO

The ultimate sound insulating wall system

This section includes updated information, added since it was first published in July 2009. Please see the WHITE BOOK update document for details.
Last updated 21/01/2011

O_2 Arena Vue Cinemas, London

GypWall AUDIO

67 – 80 R_w dB

60 – 120 mins

GypWall AUDIO is a non-loadbearing, twin frame high performance wall system that provides exceptionally high levels of sound insulation. It is used to separate multiple use facilities, such as lecture theatres, music rooms, multi-screen cinemas, exhibition and conference centres, and leisure centres.

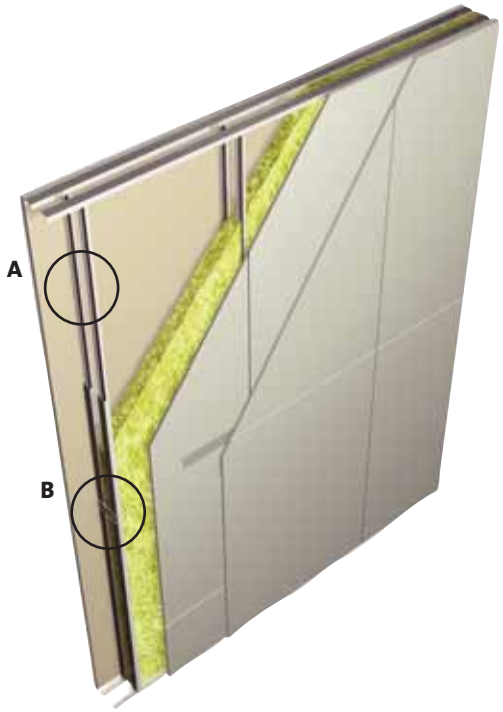

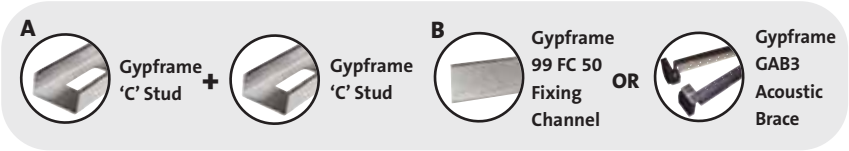

Key facts

- Exceptionally high levels of sound insulation
- Designed to satisfy sound insulation requirements for cinemas equipped with high performance sound systems
- Lightweight, compared to masonry alternatives
- Up to 120 minutes fire resistance
- Can provide fire protection to structural steel within the wall cavity

Applications

Applications requiring high performance acoustic partitioning, such as cinema walls.

Sector

✓ **Entertainment**

System components

Gypframe metal products

92 S 10 'C' Stud — **Length** 3600, 4200mm

Standard Floor & Ceiling Channel
94 C 50
Deep Flange Floor & Ceiling Channel
94 DC 60
Extra Deep Flange Floor & Ceiling Channel
94 EDC 70
All channels are available in 3600mm only.

99 FC 50 Fixing Channel — **Length** 2400mm

150 FC 90 Fixing Channel — **Length** 1197mm

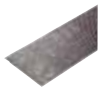

GFS1 Fixing Strap — **Length** 2400mm

GA5 Internal Fixing Angle — **Length** 3600mm

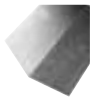

GA6 Splayed Angle — **Length** 2400, 3600mm

GAB3 Acoustic Brace — **Length** 459mm

Board products

Gyproc WallBoard
Thickness 15mm
Width 1200mm

Gyproc SoundBloc
Thickness 12.5, 15mm
Width 1200mm

Gyproc Plank
Thickness 19mm
Width 600mm

Gyproc FireLine
Thickness 12.5mm
Width 1200mm

Gyproc DuraLine
Thickness 15mm
Width 1200mm

Fixing and finishing products

Gyproc Wafer Head Jack-Point Screws
For Gypframe metal-to-metal fixing 0.8mm thick or greater ('I' studs 0.6mm thick and greater).

Gyproc Jack-Point Screws
For fixing boards to Gypframe metal framing 0.8mm thick or greater ('I' studs 0.6mm thick and greater).

Gyproc Sealant
Sealing air paths for optimum sound insulation.

Gyproc jointing materials
For seamless jointing.

Gyproc edge and angle beads
Protecting and enhancing board edges and corners.

Gyproc FireStrip
For fire-stopping deflection heads.

Thistle Board Finish or Thistle Multi-Finish
To provide a plaster skim finish.

or

Thistle Durafinish
To provide improved resistance to accidental damage.

Insulation products

100mm Isover Spacesaver Ready-Cut
To achieve acoustic performance.

Stone mineral wool (by others)
For fire-stopping and to achieve acoustic performance.

Installation overview

Gypframe Floor & Ceiling Channels are fixed at the head and base to achieve the specified wall thickness. Gypframe 'C' Studs are fitted vertically to friction-fit within the channel sections and to abutments, to form the framework. This allows for adjustment during boarding. Studs should be fitted to face the same way and extended by splicing to the specified height. Additional framing is installed as required to support heavy fixtures. Insulation is installed into the cavity-formed frameworks. The frames are braced using Gypframe GAB3 Acoustic Braces or solid braces formed from Gypframe 99 FC 50 Fixing Channel at specified centres.
Gyproc Sealant is applied to the frame perimeters to seal airpaths. Boards are screw-fixed to framing members to form the lining. Horizontal joints in face layer boards should be backed with Gypframe GFS1 Fixing Strap.

Services
Electrical and other services are normally installed after one side is boarded. Horizontal runs are routed through cut-outs in the studs. A high performance service box detail must be used.
▶ Refer to **section 3.5.2 – Service penetrations and fixing into drywall systems.**

GypWall AUDIO incorporating alternative stud sizes
Whilst the system solutions shown in pages 190-191 show Gypframe 92 S 10 'C' Studs, other Gypframe stud sizes can be used depending on the maximum height requirements. Contact the British Gypsum Drywall Academy for further guidance.

For full installation details, refer to the British Gypsum **SITE** BOOK, available to download from www.british-gypsum.com

For full installation details, refer to the British Gypsum **SITE BOOK**, available to download from www.british-gypsum.com

Performance (▶ Refer to **section 3 - Basic principles of system design**)

EN

Table 1a – GypWall AUDIO 92mm Gypframe 'C' Stud
Solutions to satisfy the requirements of *BS EN 1364-1: 1999*

Two frames of Gypframe 92 S 10 'C' Studs spaced at 600mm centres with Gypframe 99 FC 50 Fixing Channel at 3600mm centres or Gypframe GAB3 Acoustic Braces at 3300mm centres. Linings and insulation as in table.

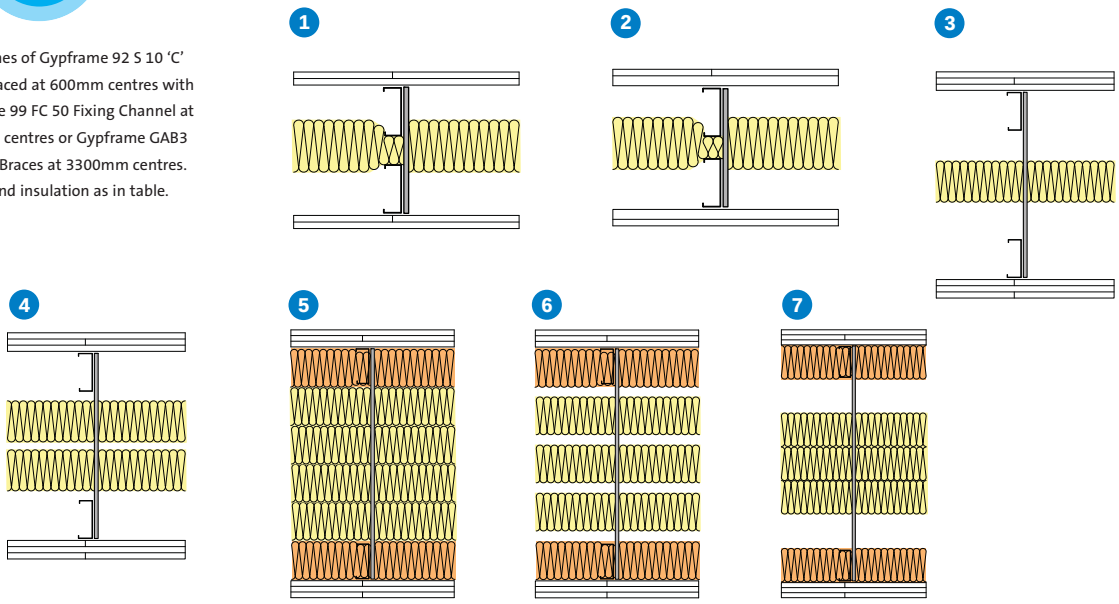

Detail	Partition thickness	Board type[1]	Lining thickness	Recommended maximum partition heights[2] Fixing Channel braces at 3600mm centres L/240	L/125[3]	GAB3 Acoustic braces at 3300mm centres L/240	L/125[3]	Isover Spacesaver Ready-Cut	Sound insulation R_w (R_w + Ctr)	Duty rating	Approx. weight	System reference
	mm		mm	mm	mm	mm	mm	mm	dB		kg/m²	
60 minutes fire resistance EN												
1	300	SoundBloc	2 x 12.5	8000	9500	8000	10000	100	67 (56)	Severe	47	A326001
2	300	Plank + FireLine	19 + 12.5	8000	9500	8000	10000	100	67 (57)	Severe	57	A326006
1	300	SoundBloc	2 x 15	8000	9500	8000	10000	100	69 (60)	Severe	55	A326002
2	300	Plank + SoundBloc	19 + 12.5	8000	9500	8000	10000	100	70 (60)	Severe	58	A326003
120 minutes fire resistance EN												
3	550	SoundBloc	3 x 15	9000	11500	9500	11500	100	75 (69)	Severe	80	A326016
4	550	SoundBloc	3 x 15	9000	11500	9500	11500	2 x 100	76 (68)	Severe	80	A326013
5	600	SoundBloc	3 x 15	9000	11500	9500	11500	4 x 100 + 2 x 100 stone mineral wool	77 (69)	Severe	80	A326017
6	600	SoundBloc	3 x 15	9000	11500	9500	11500	3 x 100 + 2 x 100 stone mineral wool	77 (69)	Severe	80	A326018
7	800	SoundBloc	3 x 15	9500	11500	9000	11500	3 x 100 + 2 x 100 stone mineral wool	80 (71)	Severe	80	A326019

[1] For improved durability and impact resistance, the outer layer of Gyproc FireLine or Gyproc SoundBloc can be replaced with a layer of 15mm Gyproc DuraLine.
[2] For heights between 4200mm and 8000mm, Gypframe Deep Flange Floor & Ceiling Channel should be used at base and at head (subject to deflection criteria).
[3] Refer to deflection criteria, in **Design** section.

NB The fire resistance and sound insulation performances are for imperforate partitions, walls and ceilings incorporating boards with all joints taped and filled, or skimmed according to British Gypsum's recommendations. The quoted performances are achieved only if British Gypsum components are used throughout, and the Company's fixing recommendations are strictly observed. Any variation in the specifications should be checked with British Gypsum.

NB The stud frames must be braced at least once irrespective of the partition height or specified bracing centres.

NBS work section K10 - Plasterboard drylinings / partitions / ceilings

Table 1b – GypWall AUDIO 92mm Gypframe 'C' Stud
Solutions to satisfy the requirements of *BS 476: Part 22: 1987*

Two frames of Gypframe 92 S 10 'C' Studs spaced at 600mm centres with Gypframe 99 FC 50 Fixing Channel at 3600mm centres or Gypframe GAB3 Acoustic Braces at 3300mm centres. Linings and insulation as in table.

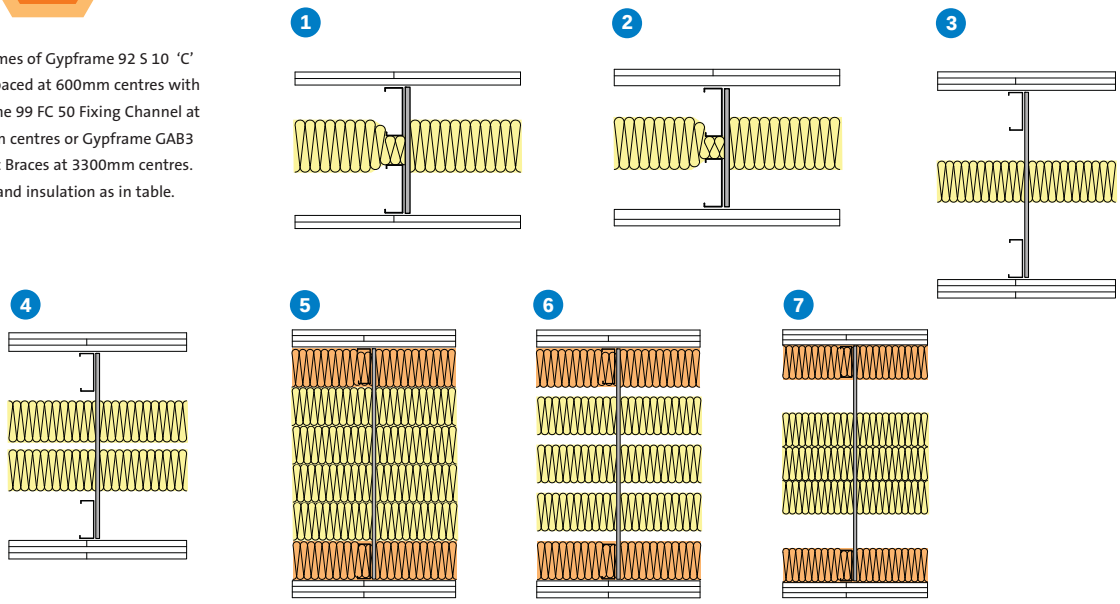

Detail	Partition thickness	Board type[1]	Lining thickness	Recommended maximum partition heights[2] Fixing Channel braces at 3600mm centres L/240	Fixing Channel braces at 3600mm centres L/125[3]	GAB3 Acoustic braces at 3300mm centres L/240	GAB3 Acoustic braces at 3300mm centres L/125[3]	Isover Spacesaver Ready-Cut	Sound insulation R_w (R_w + Ctr)	Duty rating	Approx. weight	System reference
	mm		mm	mm	mm	mm	mm	mm	dB		kg/m²	
60 minutes fire resistance BS												
1	300	SoundBloc	2 x 12.5	8000	9500	8000	10000	100	67 (56)	Severe	47	A326001
90 minutes fire resistance BS												
1	300	WallBoard	2 x 15	8000	9500	8000	10000	100	67 (58)	Severe	46	A326011
1	300	SoundBloc	2 x 15	8000	9500	8000	10000	100	69 (60)	Severe	55	A326002
2	300	Plank + SoundBloc	19 + 12.5	8000	9500	8000	10000	100	70 (60)	Severe	58	A326003
120 minutes fire resistance BS												
2	300	Plank + FireLine	19 + 12.5	8000	9500	8000	10000	100	67 (57)	Severe	57	A326006
3	550	SoundBloc	3 x 15	9000	11500	9500	11500	100	75 (69)	Severe	80	A326016
4	550	SoundBloc	3 x 15	9000	11500	9500	11500	2 x 100	76 (68)	Severe	80	A326013
5	600	SoundBloc	3 x 15	9000	11500	9500	11500	4 x 100 + 2 x 100 stone mineral wool	77 (69)	Severe	80	A326017
6	600	SoundBloc	3 x 15	9000	11500	9500	11500	3 x 100 + 2 x 100 stone mineral wool	77 (69)	Severe	80	A326018
7	800	SoundBloc	3 x 15	9500	11500	9000	11500	3 x 100 + 2 x 100 stone mineral wool	80 (71)	Severe	80	A326019

[1] For improved durability and impact resistance, the outer layer of Gyproc FireLine or Gyproc SoundBloc can be replaced with a layer of 15mm Gyproc DuraLine.
[2] For heights between 4200mm and 8000mm, Gypframe Deep Flange Floor & Ceiling Channel should be used at base and at head (subject to deflection criteria).
[3] Refer to deflection criteria, in **Design** section.

NB The fire resistance and sound insulation performances are for imperforate partitions, walls and ceilings incorporating boards with all joints taped and filled, or skimmed according to British Gypsum's recommendations. The quoted performances are achieved only if British Gypsum components are used throughout, and the Company's fixing recommendations are strictly observed. Any variation in the specifications should be checked with British Gypsum.

NB The stud frames must be braced at least once irrespective of the partition height or specified bracing centres.

Performance (▶ Refer to **section 3 - Basic principles of system design**)

Table 2 - GypWall AUDIO fire protection to structural steel
Solutions to satisfy the requirements of *ENV 13381-4: 2002* and *BS 476: Part 21: 1987*

Board type[1]	Lining thickness mm	Fire resistance mins	Section factor[2] A/V (Hp/A) m^{-1}
SoundBloc	2 x 12.5	30	Up to 300
SoundBloc	2 x 15	60	Up to 300
Plank + SoundBloc	19 + 12.5	60	Up to 300
Plank + FireLine	19 + 12.5	60	Up to 300
SoundBloc	3 x 15	120	Up to 300

[1] For improved durability and impact resistance, the outer layer of Gyproc FireLine or Gyproc SoundBloc can be replaced with a layer of 15mm Gyproc DuraLine.
[2] Based on four-sided exposure, with no vertical joints aligning with the column, and boards not fixed to the column to maintain air space (10mm for BS or 50mm for EN).

Table 3 - Acoustic performance of GypWall AUDIO at low frequencies

Detail	Overall wall thickness	Board type[1]	Lining thickness	Isover Spacesaver Ready-Cut	Sound insulation (R) 63Hz	125Hz	250Hz	R_w	System reference
	mm		mm	mm	dB	dB	dB	dB	
1	300	SoundBloc	2 x 12.5	100	29.4	41.8	55.6	67	A326001
1	300	WallBoard	2 x 15	100	30.4	43.4	55.3	67	A326011
2	300	Plank + FireLine	19 + 12.5	100	29.7	43.1	55.3	67	A326006
1	300	SoundBloc	2 x 15	100	35.6	45.8	57.5	69	A326002
2	300	Plank + SoundBloc	19 + 12.5	100	34.8	46.1	58.6	70	A326003
3	550	SoundBloc	3 x 15	100	37.9	56.7	63.0	75	A326016
4	550	SoundBloc	3 x 15	2 x 100	41.1	55.7	62.0	76	A326013
5	600	SoundBloc	3 x 15	4 x 100 + 2 x 100 stone mineral wool	46.0	55.0	65.0	77	A326017
6	600	SoundBloc	3 x 15	3 x 100 + 2 x 100 stone mineral wool	46.5	55.7	63.8	77	A326018
7	800	SoundBloc	3 x 15	3 x 100 + 2 x 100 stone mineral wool	51.3	57.5	67.1	80	A326019

[1] For improved durability and impact resistance, the outer layer of Gyproc FireLine or Gyproc SoundBloc can be replaced with a layer of 15mm Gyproc DuraLine.

Design

Planning - key factors
The position of services and heavy fixtures should be pre-determined and their installation planned into the frame erection stage.

Designers and site management should give full consideration to the potential exposure of **GypWall AUDIO** to differential pressures, such as wind loadings during installation.

Deflection criteria
Partitions built to a maximum height based on L/125 at 200 Pa will exhibit greater deflection compared to partitions built to a maximum height based on L/240 at 200 Pa. Partitions with deflection characteristics outside the standard L/240 criteria will exhibit more flex during installation and in general use, and therefore we recommend you verify the acceptibility of the deflections with the relevant interested parties before specifying / installing partitions based on L/125 criteria.

Cross bracing
Laboratory tests were carried out on walls without bracing. The results, however, are a realistic representation of site conditions in which Gypframe 99 FC 50 Fixing Channel cross-braces are fitted at the recommended 3600mm maximum centres, provided that appropriate measures are taken on site to eliminate flanking sound transmission. Test evidence is provided by British Gypsum Report ATR 1299, where a site test on a large multi-screen cinema wall achieved comparable performance to the equivalent specification tested in the laboratory without bracing.

Acoustic designers may prefer the option of a resilient acoustic brace. The Gypframe GAB3 Acoustic Brace has been shown by test not to downgrade acoustic performance in laboratory conditions. As a result of the mechanics of this brace, however, fixing centres should be reduced from 3600mm to 3300mm, staggered by 1200mm. Maximum recommended wall heights will vary - refer to **Tables 1a** and **1b**.

The minimum and maximum wall widths for which Gypframe GAB3 Acoustic Brace can be used without modification are 300mm and 600mm respectively. Likewise, the minimum and maximum cavity width between the two stud frames for which Gypframe GAB3 Acoustic Brace can be used without modification are 100mm and 400mm respectively.

The Gypframe GAB3 Acoustic Brace may be cut using a hacksaw or powertool. If required, the Gypframe GAB Acoustic Brace can be extended by fixing a short length of Gypframe 92 S 10 'C' Stud to one brace with four Gyproc Wafer Head Jack-Point Screws (ensure a 75mm minimum overlap to each stud with no contact to board lining). The short length of stud should also be fixed to the vertical studs with four Gyproc Wafer Head Jack-Point Screws.

Care should be taken to ensure all Gypframe GAB3 Acoustic Braces are correctly aligned and fully engaged. Where partition heights are specified based on lateral restraint from a suitable ceiling, either this ceiling should be in place at the time of installation or temporary restraint should be used.

Board fixing
In common with building practice, the twin frame wall should be boarded progressively from each side of the partition. This will help prevent differential loadings on the framework.

Cavity fire barriers
Stone mineral wool cut neatly to fit across the cavity forms a suitable closure.
▶ Refer to **section 10 – Cavity fire barriers.**

Services
Penetrations
Penetrations of fire-resistant or sound-insulating constructions for services need careful consideration to ensure that the performance of the element is not downgraded and also that the services themselves do not act as the mechanism of fire spread or sound transmission.
▶ Refer to **section 3.5 – Service installations.**

Independent support
When designing for the installation of services, such as fire dampers and associated ductwork, through a **GypWall** partition, consideration should be given to the size and weight of the damper. This will determine whether it can be supported directly from the partition or needs to be independently supported from the structure.
▶ Refer to **section 3.5 – Service installations.**

Electrical
The installation of electrical services should be carried out in accordance with *BS 7671*. The cut-outs in the studs can be used for routing electrical and other small services (see **GypWall CLASSIC Construction details – 1**). Switch boxes and socket outlets can be supported from Gypframe 99 FC 50 or 150 FC 90 Fixing Channels fixed horizontally between studs, or a high performance socket box detail where higher acoustic performance is required.

Fixing floor and ceiling channels
Gypframe Floor & Ceiling Channels must be securely fixed with a row of fixings at 600mm maximum centres. For 94mm channels and above, two rows of staggered fixings are required, each row at 600mm centres and each fixing 25mm in from the flange. If the floor is uneven, a 38mm thick timber sole plate equal to the width of the channel should be used.

If the concrete or screeded floor is new, consideration should be given to the installation of a damp-proof membrane between the floor surface and the channel or sole plate.

Door openings
Any openings will require careful detailing if the acoustic performance is to be maintained. Specialist heavy acoustic doorsets may require additional support.

Framing surround for openings
Where services such as horizontal ducts, fire dampers and access panels are required to penetrate the wall, their position should be pre-determined in order that a framed opening can be provided.
▶ Refer to **section 3.5 – Service installations.**

Deflection heads
Partition head deflection designs may be necessary to accommodate deflections in the supporting floor. Deflection heads may also be required to the underside of roof structures subjected to positive and negative pressures.
▶ Refer to **section 3.2.2 – Principles of building acoustics.**

Design (continued)

Fixtures

Lightweight fixtures can be made directly to the partitions. Medium weight fixtures can be made to Gypframe 99 FC 50 Fixing Channel. Heavyweight fixtures (to *BS 5234*), such as wash basins and wall cupboards, can be fixed using Gypframe 150 FC 90 Fixing Channel.

▶ Refer to **section 3.5.2 – Service penetrations and fixing into drywall systems**.

Board finishing

▶ Refer to **section 13 – Finishing systems and decorative effects.**

For more information refer to the British Gypsum **SITE** BOOK, available to download from www.british-gypsum.com

▶ Please refer to **section 3 - Basic principles of system design** for general guidance

Construction details

1 Splicing and acoustic bracing

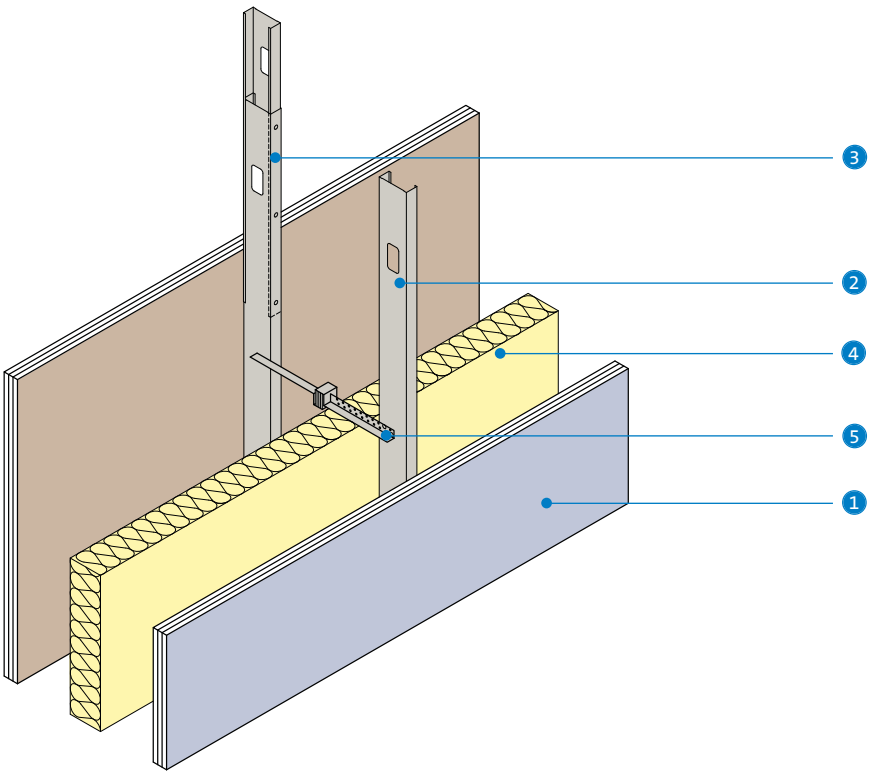

2 Splicing and solid bracing

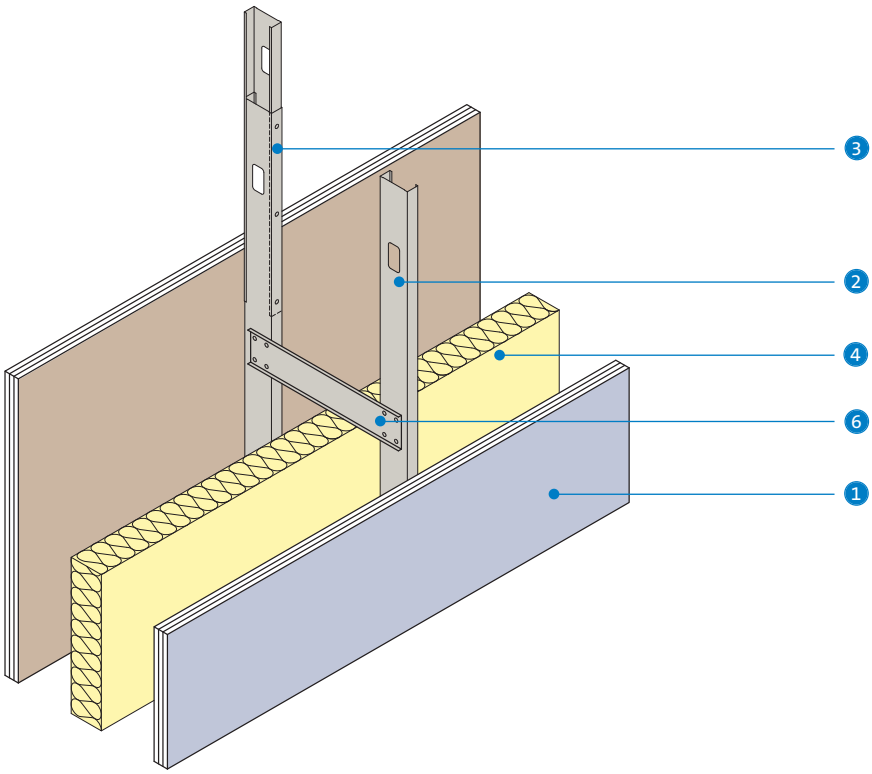

1. Gyproc plasterboard
2. Gypframe 'C' Stud
3. Splice - 600mm overlap with three Gyproc Wafer Head Jack-Point Screws into each flange
4. Isover insulation
5. Gypframe GAB3 Acoustic Brace
6. Brace formed from Gypframe 99 FC 50 Fixing Channel

3 Head and base

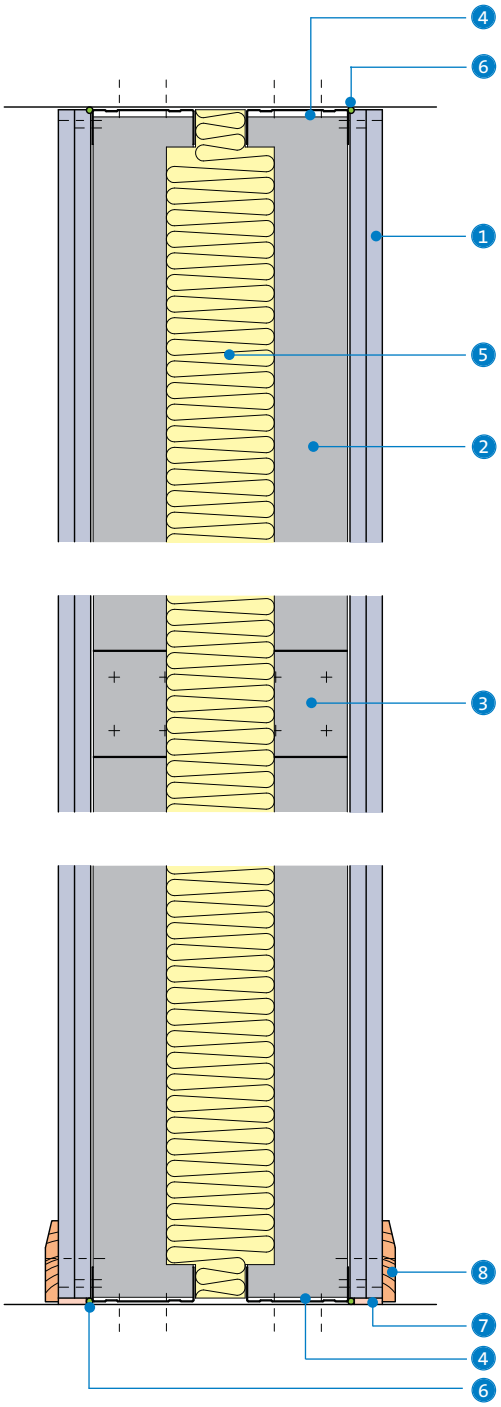

4 Deflection head for 15mm downward movement and 60 minutes fire resistance

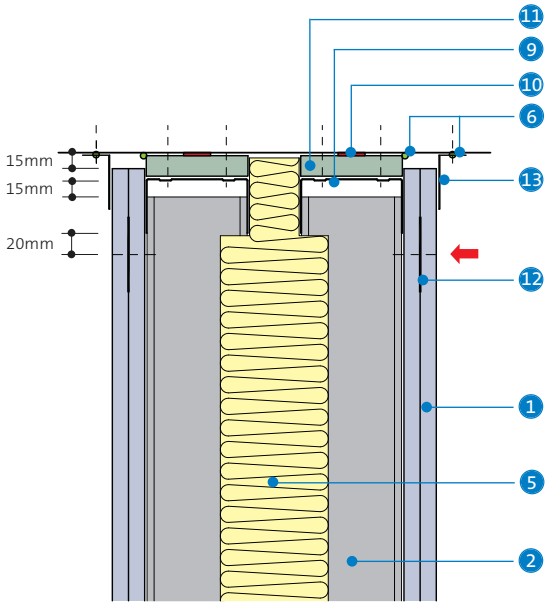

5 Deflection head for ±25mm movement and 60 minutes fire resistance

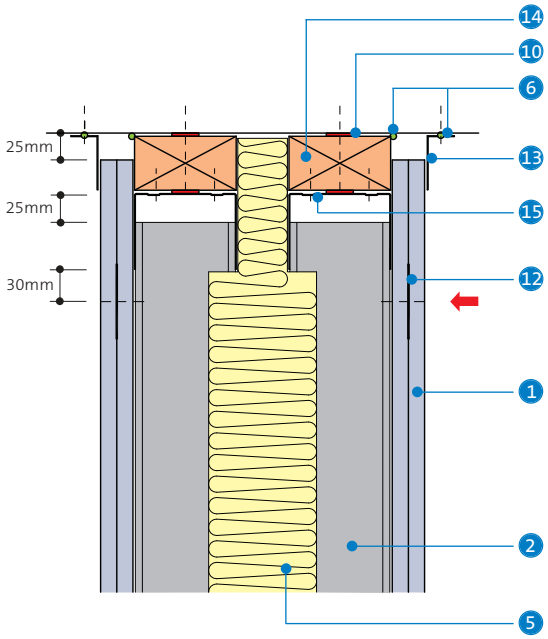

1. Gyproc plasterboard
2. Gypframe 'C' Stud
3. Gypframe 99 FC 50 Fixing Channel
4. Gypframe Standard Floor & Ceiling Channel
5. Isover insulation
6. Gyproc Sealant
7. Bulk fill with Gyproc jointing materials (where gap exceeds 5mm)
8. Skirting
9. Gypframe Deep Flange Floor & Ceiling Channel suitably fixed through fire-stop to structure
10. Gyproc FireStrip
11. Gyproc CoreBoard
12. Gypframe GFS1 Fixing Strap
13. Gypframe Steel Angle
14. Timber head plate suitably fixed to structure
15. Gypframe Extra Deep Flange Floor & Ceiling Channel suitably fixed to timber head plate

NB No fixings should be made through the boards into the flanges of the head channel. The arrow (⬅) denotes the position of the uppermost board fixing, which should be made into Gypframe GFS1 Fixing Strap. Continuous Gyproc FireStrip must be installed as shown to maintain fire performance.

6 'T' junction

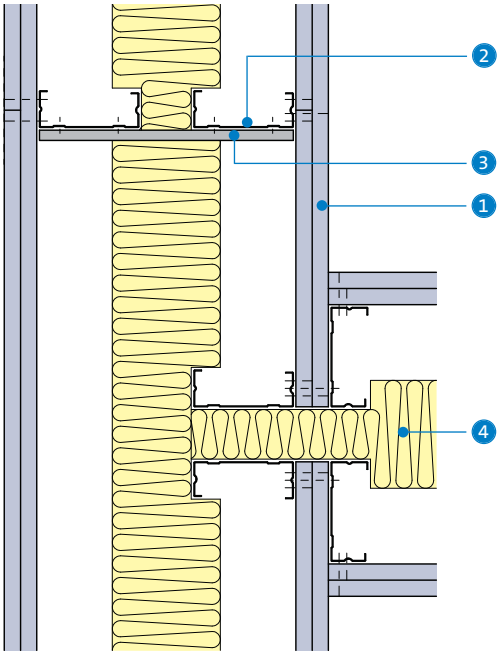

7 Alternative 'T' junction using GA5 Internal Fixing Angle

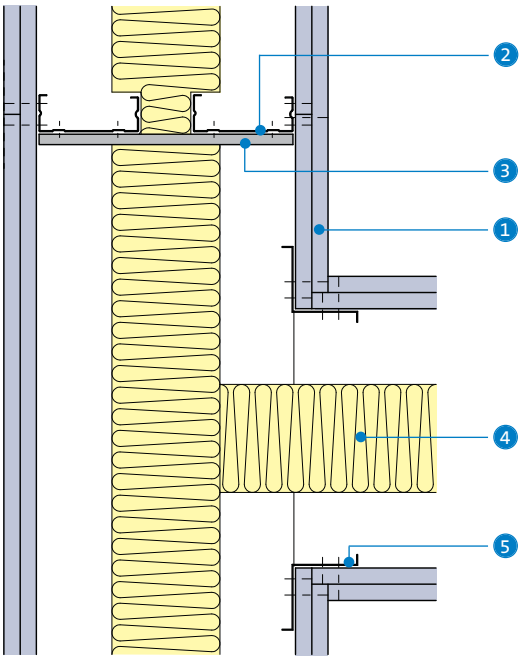

8 'T' junction with **GypWall CLASSIC** partition

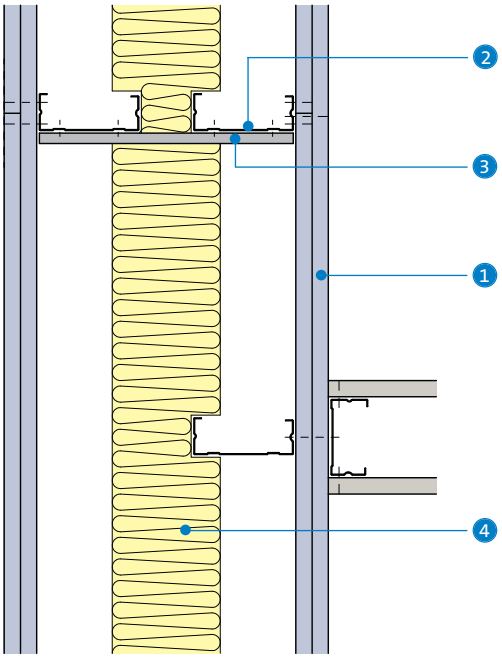

9 Internal / external corner

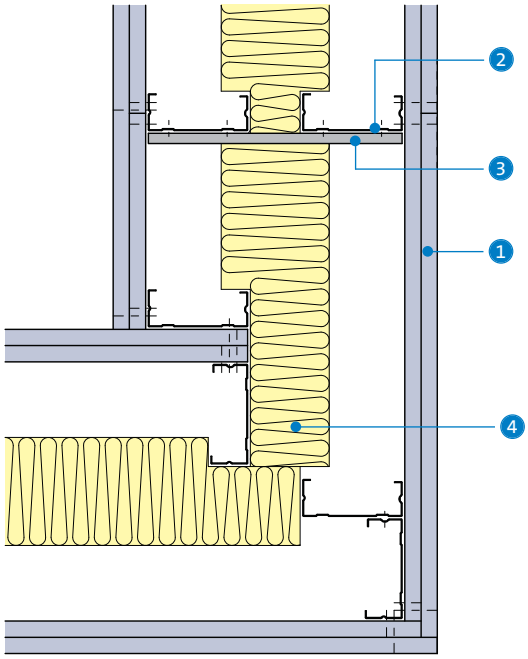

1. Gyproc plasterboard
2. Gypframe 'C' Stud
3. Gypframe 99 FC 50 Fixing Channel
4. Isover insulation
5. Gypframe GA5 Internal Fixing Angle

ShaftWall

Shaft and duct encasement system

This section includes updated information, added since it was first published in July 2009. Please see the WHITE BOOK update document for details.
Last updated 21/01/2011

Manchester Joint Hospitals

ShaftWall

39 – 53 R_w dB 60 – 120 mins

ShaftWall provides a lightweight, fire-resistant structure to protect elements in confined spaces wherever access is limited to one side only. The system provides a protective structure which can be incorporated at an early stage of the construction without the need for scaffolding. The system can also be built horizontally to provide a fire-rated membrane. **StairWall**, a derivative of the **ShaftWall** system, is used to protect stairwells.

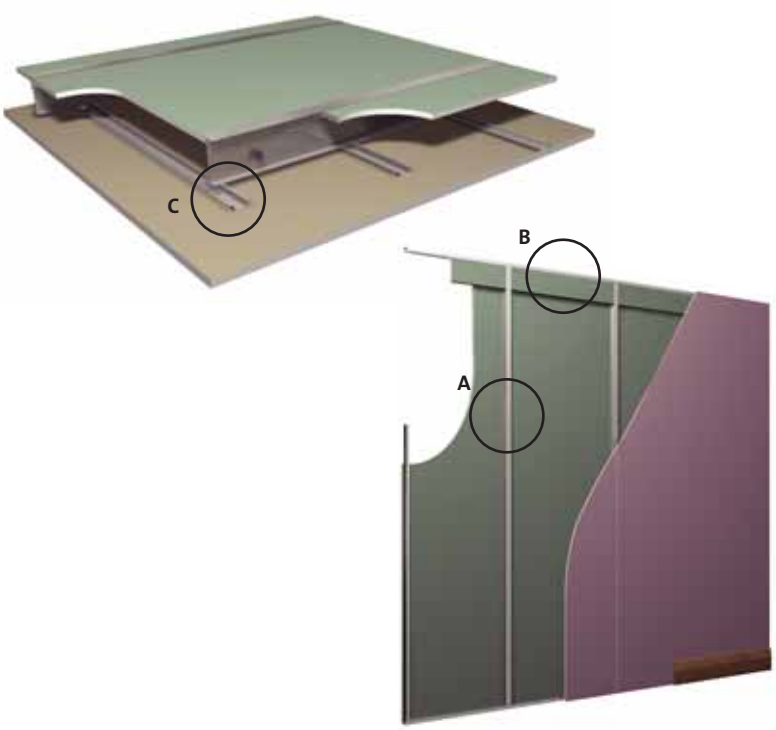

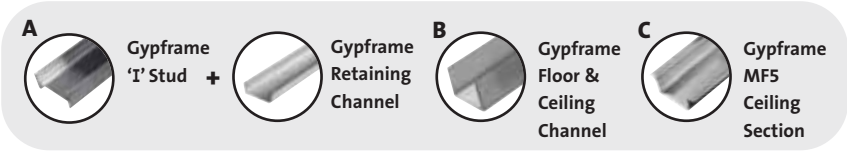

Key facts

- Lightweight, fast-track construction
- Provides fire protective shaft enclosures, stairwells and horizontal membranes
- A solution for all enclosures and risers where access is limited to one side only
- Horizontal membranes built entirely from below
- Installation can commence earlier in construction
- Minimal wall thickness of 77mm
- Satisfies deflection and air pressure requirements
- Satisfies the 1m boundary requirements of Building Regulations Approved Document B
- Variant with non-combustible board linings

Applications

Service risers, lift shafts, service ducts and stairwells.

Sector

- ✓ Office / commercial
- ✓ Apartment buildings
- ✓ Retail
- ✓ High-rise multi-occupancy
- ✓ Healthcare

System components

Gypframe metal products

	60 I 70 'I' Stud **70 I 70 'I' Stud**	**Length** 3600, 4200mm
	92 I 90 'I' Stud	**Length** 3600, 5000, 6000mm
	146 TI 90 Tabbed 'I' Stud	**Length** 5000, 6000mm
	Starter Channels **60 SC 55** **70 SC 70** **92 SC 90**	**Length** 3600mm 3600, 4200mm 5000, 6000mm
	Tabbed Starter Channel **146 TSC 90**	**Length** 5000, 6000mm
	'J' Channel **62 JC 70**	**Length** 3600mm
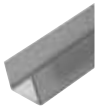	**Standard Floor & Ceiling Channels** **62 C 50** **72 C 50** **94 C 50** **148 C 50** **Deep Flange Floor & Ceiling Channels** **62 DC 60** **72 DC 60** **94 DC 60** **148 DC 60** **Extra Deep Flange Floor & Ceiling Channels** **72 EDC 80** **94 EDC 70** **148 EDC 80** All channels are available in 3600mm only.	
	Retaining Channels **G102** (for 60mm and 146mm Gypframe 'I' Studs) **G110** (for 70mm Gypframe 'I' Studs) **G105** (for 92mm Gypframe 'I' Studs) All channels 2400mm	
	Retaining Clips **G108** (for 92mm Gypframe 'I' Studs) **G109** (for 146mm Gypframe 'I' Studs)	
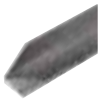	**GA3 Steel Angle**	**Length** 3200mm
	99 FC 50 **Fixing Channel**	**Length** 2400mm

Gypframe metal products (continued)

	150 FC 90 **Fixing Channel**	**Length** 1197mm
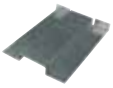	**Service Support Plate** For the installation of plywood within a partition cavity.	**Length** 130mm
	GFS1 Fixing Strap **or**	**Length** 2400mm
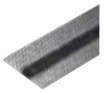	**GFT1 Fixing 'T'**	**Length** 2400mm
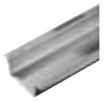	**MF5 Ceiling Section**	**Length** 3600mm
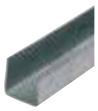	**MF6 Perimeter Channel** Perimeter support for MF5s.	**Length** 3600mm

Board products

	Gyproc FireLine[1] Thickness Width	 12.5, 15mm 1200mm
	Gyproc CoreBoard Thickness Width	 19mm 598mm
	Gyproc DuraLine[1] Thickness Width	 15mm 1200mm
	Gyproc WallBoard[1] Thickness Width	 12.5, 15mm 900mm
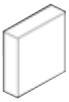	**Glasroc F FIRECASE** Thickness Width	 15, 20mm 1200mm[2]

[1] Moisture resistant grade board available.
[2] Glasroc F FIRECASE boards used to replace Gyproc CoreBoard on the shaft side of the system must be cut to 598mm wide (+0mm / -3mm).

Fixing and finishing products

Gyproc Wafer Head Jack-Point Screws
For Gypframe metal-to-metal fixing 0.8mm thick or greater ('I' studs 0.6mm thick and greater).

Gyproc Drywall Screws
For fixing boards to Gypframe metal framing less than 0.8mm thick ('I' studs less than 0.6mm thick).

or

Gyproc Jack-Point Screws
For fixing boards to Gypframe metal framing 0.8mm thick or greater ('I' studs 0.6mm thick and greater).

Always use genuine branded British Gypsum components to qualify for **SpecSure**® lifetime warranty

System components (continued)

Fixing and finishing products (continued)

Gyproc Profilex Access Panel
For access to the plenum for maintenance purposes.

Gyproc Sealant
Sealing air paths for optimum sound insulation and sealing structure to meet air pressure criteria.

Gyproc jointing materials
For seamless jointing.

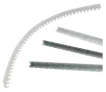

Gyproc edge and angle beads
Protecting and enhancing board edges and corners.

Fixing and finishing products (continued)

Gyproc FireStrip
For fire-stopping deflection heads.

Thistle Board Finish or Thistle Multi-Finish
To provide a plaster skim finish.

or

Thistle Durafinish
To provide improved resistance to accidental damage.

Insulation products

Isover APR 1200
25mm, for improved acoustic performance.

Installation overview

Gypframe Floor & Ceiling Channel (or Gypframe 'J' Channel) is fixed to the structure and Gypframe Starter Channel to vertical abutments. (Please reference to the relevant performance tables for head channels). Gyproc FireStrip is used in a continuous line to seal at the head.

ShaftWall is assembled from the non-shaft side using Gypframe 'I' Stud framing. Gyproc CoreBoard (or 20mm Glasroc F FIRECASE) is located between studs and secured using Gypframe Retaining Channel. All horizontal joints in the Gyproc CoreBoard (or 20mm Glasroc F FIRECASE) layer are fire-stopped. Gyproc FireLine (or Glasroc F FIRECASE) board linings are fixed to the non-shaft side of the frame. Deflection is accommodated at the head by incorporating plasterboard fire-stops cut on site (or Glasroc F FIRECASE).

If specified, 25mm Isover APR 1200 is included in the cavity to enhance the acoustic performance.

Pressurised shafts and service ducts are sealed using Gyproc Sealant. This is applied to all board-to-metal junctions.

Services
Penetrations for services, ducting and access panels require the construction of a framed opening. Fire-stopping is installed by specialist contractors.

For full installation details, refer to the British Gypsum **SITE** BOOK, available to download from www.british-gypsum.com

For full installation details, refer to the British Gypsum **SITE BOOK**, available to download from www.british-gypsum.com

Performance (▶ Refer to **section 3 - Basic principles of system design**)

EN

Table 1a – ShaftWall (vertical elements)
Solutions to satisfy the requirements of *BS EN 1364-1: 1999*

1

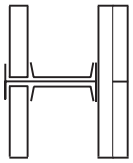

Gypframe 60, 70 or 92mm 'I' Stud framework with Gyproc CoreBoard between studs, secured by Gypframe Retaining Channel. 25mm Isover APR 1200 in cavity (optional). Lining boards to non-shaft side, see table.

2

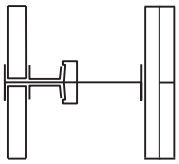

Gypframe 146 TI 90 Tabbed 'I' Stud framework with Gyproc CoreBoard between studs, secured by Gypframe Retaining Channel. 25mm Isover APR 1200 in cavity (optional). Lining boards to non-shaft side, see table.

3

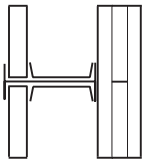

Gypframe 60, 70 or 92mm 'I' Stud framework with Gyproc CoreBoard between studs, secured by Gypframe Retaining Channel. 25mm Isover APR 1200 in cavity (optional). Lining boards to non-shaft side, see table.

4

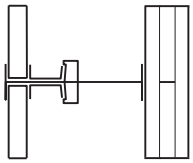

Gypframe 146 TI 90 Tabbed 'I' Stud framework with Gyproc CoreBoard between studs, secured by Gypframe Retaining Channel. 25mm Isover APR 1200 in cavity (optional). Lining boards to non-shaft side, see table.

Detail	Partition thickness	Lining boards to non-shaft side[1]		Maximum partition height[2]	Stud size	Sound insulation R_w[3]		Duty rating[5]	Approx. weight	System reference
		Board type	Lining thickness			No insulation	Sealed structure[4] plus 25mm Isover APR 1200			
	mm		mm	mm	mm	dB	dB		kg/m²	
60 minutes fire resistance EN										
1	87	FireLine	2 x 12.5	4400	60	40	44	Severe	39	A306002/012
1	97	FireLine	2 x 12.5	4400	70	40	44	Severe	39	A306002/012
1	119	FireLine	2 x 12.5	6000	92	45	47	Severe	40	A306005/014
2	173	FireLine	2 x 12.5	6000	146	48	52	Severe	42	A306008/020
90 minutes fire resistance EN										
1	92	FireLine	2 x 15	4500	60	42	45	Severe	43	A306003/023
1	102	FireLine	2 x 15	4500	70	42	45	Severe	43	A306003/023
1	124	FireLine	2 x 15	6000	92	44	46	Severe	44	A306006/025
2	178	FireLine	2 x 15	6000	146	48	50	Severe	46	A306009/028
120 minutes fire resistance EN										
3	107	FireLine	3 x 15	4500	60	43	45	Severe	55	A306030/035
3	117	FireLine	3 x 15	4500	70	43	45	Severe	55	A306030/035
3	139	FireLine	3 x 15	6000	92	45	46	Severe	56	A306031/036
4	193	FireLine	3 x 15	6000	146	49	50	Severe	58	A306032/033

[1] For improved durability and impact resistance, the outer layer of Gyproc FireLine can be replaced with a layer of 15mm Gyproc DuraLine.
[2] The maximum heights quoted are limited by the fire state field of application or by limiting deflection of L/240 at 200 Pa, whichever is the more onerous.
[3] The acoustic performance figures quoted include **ShaftWall** partitions with deflection heads.
[4] Gyproc CoreBoard and first layer of lining board are bedded onto Gyproc Sealant, as required for pressurised air shafts, in addition to normal sealing.
[5] Estimated rating from non-shaft side only.

NB The fire resistance and sound insulation performances are for imperforate partitions, but incorporating deflection heads, with all joints taped and filled, or skimmed according to British Gypsum's recommendations. The quoted performances are achieved only if British Gypsum components are used throughout, and the Company's fixing recommendations are strictly observed. Any variation in the specifications should be checked with British Gypsum.

NB Gypframe Extra Deep Flange Floor & Ceiling Channel or 'J' Channel should be used at the head. For the base Gypframe Floor & Ceiling Channel should be used for heights up to 4200mm, Gypframe Deep Flange Floor & Ceiling Channel should be used for heights between 4200mm and 8000mm, Gypframe Extra Deep Flange Floor & Ceiling Channel should be used for heights in excess of 8000mm.

Table 1b – ShaftWall (vertical elements)
Solutions to satisfy the requirements of *BS 476: Part 22: 1987*

1

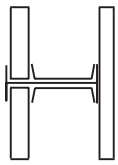

Gypframe 60, 70 or 92mm 'I' Stud framework with Gyproc CoreBoard between studs, secured by Gypframe Retaining Channel. 25mm Isover APR 1200 in cavity (optional). Lining boards to non-shaft side, see table.

2

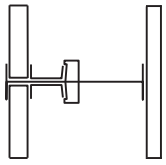

Gypframe 146 TI 90 Tabbed 'I' Stud framework with Gyproc CoreBoard between studs, secured by Gypframe Retaining Channel. 25mm Isover APR 1200 in cavity (optional). Lining boards to non-shaft side, see table.

3

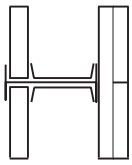

Gypframe 60, 70 or 92mm 'I' Stud framework with Gyproc CoreBoard between studs, secured by Gypframe Retaining Channel. 25mm Isover APR 1200 in cavity (optional). Lining boards to non-shaft side, see table.

4

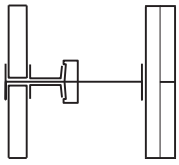

Gypframe 146 TI 90 Tabbed 'I' Stud framework with Gyproc CoreBoard between studs, secured by Gypframe Retaining Channel. 25mm Isover APR 1200 in cavity (optional). Lining boards to non-shaft side, see table.

Detail	Partition thickness mm	Lining boards to non-shaft side[1] Board type	Lining boards to non-shaft side[1] Lining thickness mm	Maximum partition height[2] mm	Stud size mm	Sound insulation R_w[3] No insulation dB	Sound insulation R_w[3] Sealed structure[4] plus 25mm Isover APR 1200 dB	Duty rating[5]	Approx. weight kg/m²	System reference
60 minutes fire resistance[6] BS										
1	77	FireLine	1 x 15	4200	60	39	42	Heavy	30	A306001/010
1	87	FireLine	1 x 15	4200	70	39	42	Heavy	30	A306001/010
1	109	FireLine	1 x 15	6000	92	40	43	Heavy	31	A306004/011
2	163	FireLine	1 x 15	7700	146	43	46	Heavy	33	A306007
90 minutes fire resistance[6] BS										
3	87	FireLine	2 x 12.5	4400	60	40	44	Severe	39	A306002/012
3	97	FireLine	2 x 12.5	4400	70	40	44	Severe	39	A306002/012
3	119	FireLine	2 x 12.5	6400	92	45	47	Severe	40	A306005/014
4	173	FireLine	2 x 12.5	7900	146	48	52	Severe	42	A306008/020
120 minutes fire resistance[6] BS										
3	92	FireLine	2 x 15	4500	60	42	45	Severe	43	A306003/023
3	102	FireLine	2 x 15	4500	70	42	45	Severe	43	A306003/023
3	124	FireLine	2 x 15	6700	92	44	46	Severe	44	A306006/025
4	178	FireLine	2 x 15	7900	146	48	50	Severe	46	A306009/028

[1] For improved durability and impact resistance, the outer layer of Gyproc FireLine can be replaced with a layer of 15mm Gyproc DuraLine. On single layer linings this will improve duty rating to Severe Duty.
[2] Based on a limiting deflection of L/240 at 200 Pa.
[3] The acoustic performance figures quoted include **ShaftWall** partitions with deflection heads.
[4] Gyproc CoreBoard and first layer of lining board are bedded onto Gyproc Sealant, as required for pressurised air shafts, in addition to normal sealing.
[5] Estimated rating from non-shaft side only.
[6] The temperature of exposed metal may exceed the requirements of *BS 476: Part 22: 1987* within the fire test period, and therefore relaxation should be sought from the approving Authority on the basis that no combustible materials are likely to be stored adjacent to the structure. In situations where the full period of insulation is required, contact the British Gypsum Drywall Academy for further guidance.

NB The fire resistance and sound insulation performances are for imperforate partitions, but incorporating deflection heads, with all joints taped and filled, or skimmed according to British Gypsum's recommendations. The quoted performances are achieved only if British Gypsum components are used throughout, and the Company's fixing recommendations are strictly observed. Any variation in the specifications should be checked with British Gypsum.

NB Gypframe Extra Deep Flange Floor & Ceiling Channel or 'J' Channel should be used at the head. For the base Gypframe Floor & Ceiling Channel should be used for heights up to 4200mm, Gypframe Deep Flange Floor & Ceiling Channel should be used for heights between 4200mm and 8000mm, Gypframe Extra Deep Flange Floor & Ceiling Channel should be used for heights in excess of 8000mm.

Performance (▶ Refer to **section 3 - Basic principles of system design**)

EN

Table 1c – ShaftWall (vertical elements) Non-combustible board linings
Solutions to satisfy the requirements of *BS EN 1364-1: 1999*

SPECSURE LIFETIME SYSTEM WARRANTY

1

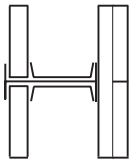

Gypframe 60, 70 or 92mm 'I' Stud framework with 20mm Glasroc F FIRECASE between studs, secured by Gypframe Retaining Channel. 25mm Isover APR 1200 in cavity (optional). Lining boards to non-shaft side, see table.

2

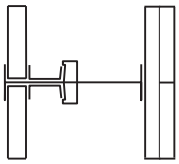

Gypframe 146 TI 90 Tabbed 'I' Stud framework with 20mm Glasroc F FIRECASE between studs, secured by Gypframe Retaining Channel. 25mm Isover APR 1200 in cavity (optional). Lining boards to non-shaft side, see table.

3

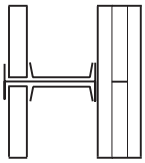

Gypframe 60, 70 or 92mm 'I' Stud framework with 20mm Glasroc F FIRECASE between studs, secured by Gypframe Retaining Channel. 25mm Isover APR 1200 in cavity (optional). Lining boards to non-shaft side, see table.

4

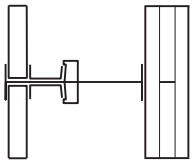

Gypframe 146 TI 90 Tabbed 'I' Stud framework with 20mm Glasroc F FIRECASE between studs, secured by Gypframe Retaining Channel. 25mm Isover APR 1200 in cavity (optional). Lining boards to non-shaft side, see table.

Detail	Partition thickness	Lining boards to non-shaft side[1]		Maximum partition height[2]	Stud size	Sound insulation R_w[3]		Duty rating[5]	Approx. weight	System reference
		Board type	Lining thickness			No insulation	Sealed structure[4] plus 25mm Isover APR 1200			
	mm		mm	mm	mm	dB	dB		kg/m²	
60 minutes fire resistance EN										
1	92	Glasroc F FIRECASE	2 x 15	4500	60	41	44	Severe	46	G306003/023
1	102	Glasroc F FIRECASE	2 x 15	4500	70	41	44	Severe	46	G306003/023
1	124	Glasroc F FIRECASE	2 x 15	6000	92	43	45	Severe	47	G306006/025
2	178	Glasroc F FIRECASE	2 x 15	6000	146	47	49	Severe	49	G306009/028
90 minutes fire resistance EN										
1	92	Glasroc F FIRECASE	2 x 15	4500	60	41	44	Severe	46	G306003/023
1	102	Glasroc F FIRECASE	2 x 15	4500	70	41	44	Severe	46	G306003/023
1	124	Glasroc F FIRECASE	2 x 15	6000	92	43	45	Severe	47	G306006/025
2	178	Glasroc F FIRECASE	2 x 15	6000	146	47	49	Severe	49	G306009/028
120 minutes fire resistance EN										
3	107	Glasroc F FIRECASE	3 x 15	4500	60	42	44	Severe	59	G306030/035
3	117	Glasroc F FIRECASE	3 x 15	4500	70	42	44	Severe	59	G306030/035
3	139	Glasroc F FIRECASE	3 x 15	6000	92	44	45	Severe	60	G306031/036
4	193	Glasroc F FIRECASE	3 x 15	6000	146	48	49	Severe	62	G306032/033

[1] For a non-combustible solution on the shaft side only the Glasroc F FIRECASE on the non-shaft side can be replaced with 15mm Gyproc FireLine or 15mm Gyproc DuraLine.
[2] The maximum heights quoted are limited by the fire state field of application or by limiting deflection of L/240 at 200 Pa, whichever is the more onerous.
[3] The acoustic performance figures quoted include **ShaftWall** partitions with deflection heads.
[4] 20mm Glasroc F FIRECASE and first layer of lining board are bedded onto Gyproc Sealant, as required for pressurised air shafts, in addition to normal sealing.
[5] Estimated rating from non-shaft side only.

NB The fire resistance and sound insulation performances are for imperforate partitions, but incorporating deflection heads, with all joints taped and filled, or skimmed according to British Gypsum's recommendations. The quoted performances are achieved only if British Gypsum components are used throughout, and the Company's fixing recommendations are strictly observed. Any variation in the specifications should be checked with British Gypsum.

NB Gypframe Extra Deep Flange Floor & Ceiling Channel or 'J' Channel should be used at the head. For the base Gypframe Floor & Ceiling Channel should be used for heights up to 4200mm, Gypframe Deep Flange Floor & Ceiling Channel should be used for heights between 4200mm and 8000mm, Gypframe Extra Deep Flange Floor & Ceiling Channel should be used for heights in excess of 8000mm.

Table 1d – ShaftWall (vertical elements) Non-combustible board linings
Solutions to satisfy the requirements of *BS 476: Part 22: 1987*

1

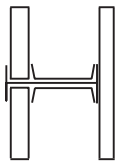

Gypframe 60, 70 or 92mm 'I' Stud framework with 20mm Glasroc F FIRECASE between studs, secured by Gypframe Retaining Channel. 25mm Isover APR 1200 in cavity (optional). Lining boards to non-shaft side, see table.

2

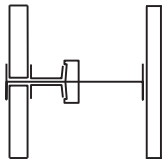

Gypframe 146 TI 90 Tabbed 'I' Stud framework with 20mm Glasroc F FIRECASE between studs, secured by Gypframe Retaining Channel. 25mm Isover APR 1200 in cavity (optional). Lining boards to non-shaft side, see table.

3

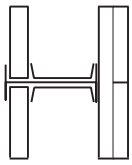

Gypframe 60, 70 or 92mm 'I' Stud framework with 20mm Glasroc F FIRECASE between studs, secured by Gypframe Retaining Channel. 25mm Isover APR 1200 in cavity (optional). Lining boards to non-shaft side, see table.

4

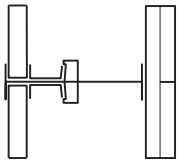

Gypframe 146 TI 90 Tabbed 'I' Stud framework with 20mm Glasroc F FIRECASE between studs, secured by Gypframe Retaining Channel. 25mm Isover APR 1200 in cavity (optional). Lining boards to non-shaft side, see table.

Detail	Partition thickness	Lining boards to non-shaft side[1]		Maximum partition height[2]	Stud size	Sound insulation R_w[3]		Duty rating[5]	Approx. weight	System reference
		Board type	Lining thickness			No insulation	Sealed structure[4] plus 25mm Isover APR 1200			
	mm		mm	mm	mm	dB	dB		kg/m²	
60 minutes fire resistance[6] BS										
1	77	Glasroc F FIRECASE	1 x 15	4200	60	38	41	Heavy	32	G306001/010
1	87	Glasroc F FIRECASE	1 x 15	4200	70	38	41	Heavy	32	G306001/010
1	109	Glasroc F FIRECASE	1 x 15	6000	92	39	42	Heavy	33	G306004/011
2	163	Glasroc F FIRECASE	1 x 15	7700	146	42	45	Heavy	35	G306007
90 minutes fire resistance[6] BS										
3	92	Glasroc F FIRECASE	2 x 15	4500	60	41	44	Severe	46	G306003/023
3	102	Glasroc F FIRECASE	2 x 15	4500	70	41	44	Severe	46	G306003/023
3	124	Glasroc F FIRECASE	2 x 15	6400	92	43	45	Severe	47	G306006/025
4	178	Glasroc F FIRECASE	2 x 15	7900	146	47	49	Severe	49	G306009/028
120 minutes fire resistance[6] BS										
3	92	Glasroc F FIRECASE	2 x 15	4500	60	41	44	Severe	46	G306003/023
3	102	Glasroc F FIRECASE	2 x 15	4500	70	41	44	Severe	46	G306003/023
3	124	Glasroc F FIRECASE	2 x 15	6700	92	43	45	Severe	47	G306006/025
4	178	Glasroc F FIRECASE	2 x 15	7900	146	47	49	Severe	49	G306009/028

[1] For a non-combustible solution on the shaft side only the Glasroc F FIRECASE on the non-shaft side can be replaced with 15mm Gyproc FireLine or 15mm Gyproc DuraLine.
[2] Based on a limiting deflection of L/240 at 200 Pa.
[3] The acoustic performance figures quoted include **ShaftWall** partitions with deflection heads.
[4] 20mm Glasroc F FIRECASE and first layer of lining board are bedded onto Gyproc Sealant, as required for pressurised air shafts, in addition to normal sealing.
[5] Estimated rating from non-shaft side only.
[6] The temperature of exposed metal may exceed the requirements of *BS 476: Part 22: 1987* within the fire test period, and therefore relaxation should be sought from the approving Authority on the basis that no combustible materials are likely to be stored adjacent to the structure. In situations where the full period of insulation is required, contact the British Gypsum Drywall Academy for further guidance.

NB The fire resistance and sound insulation performances are for imperforate partitions, but incorporating deflection heads, with all joints taped and filled, or skimmed according to British Gypsum's recommendations. The quoted performances are achieved only if British Gypsum components are used throughout, and the Company's fixing recommendations are strictly observed. Any variation in the specifications should be checked with British Gypsum.

NB Gypframe Extra Deep Flange Floor & Ceiling Channel or 'J' Channel should be used at the head. For the base Gypframe Floor & Ceiling Channel should be used for heights up to 4200mm, Gypframe Deep Flange Floor & Ceiling Channel should be used for heights between 4200mm and 8000mm, Gypframe Extra Deep Flange Floor & Ceiling Channel should be used for heights in excess of 8000mm.

Performance (▶ Refer to **section 3 - Basic principles of system design**)

EN

Table 2a – StairWall (vertical elements)
Solutions to satisfy the requirements of *BS EN 1364-1: 1999*

SPECSURE LIFETIME SYSTEM WARRANTY

1

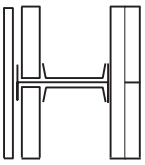

Gypframe 60, 70 or 92mm 'I' Stud framework with Gyproc CoreBoard between studs, secured by Gypframe Retaining Channel. 25mm Isover APR 1200 in cavity (optional). Lining boards to non-stairwell side (see table) plus decorative lining of Gyproc plasterboard to stairwell side.

2

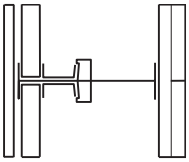

Gypframe 146 TI 90 Tabbed 'I' Stud framework with Gyproc CoreBoard between studs, secured by Gypframe Retaining Channel. 25mm Isover APR 1200 in cavity (optional). Lining boards to non-stairwell side (see table) plus decorative lining of Gyproc plasterboard to stairwell side.

3

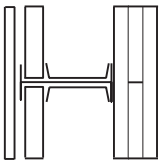

Gypframe 60, 70 or 92mm 'I' Stud framework with Gypframe CoreBoard between studs, secured by Gypframe Retaining Channel. 25mm Isover APR 1200 in cavity (optional). Lining boards to non-stairwell side (see table) plus decorative lining of Gyproc plasterboard to stairwell side.

4

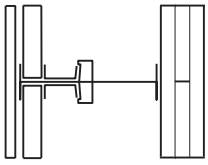

Gypframe 146 TI 90 Tabbed 'I' Stud framework with Gyproc CoreBoard between studs, secured by Gypframe Retaining Channel. 25mm Isover APR 1200 in cavity (optional). Lining boards to non-stairwell side (see table) plus decorative lining of Gyproc plasterboard to stairwell side.

Detail	Partition thickness	Lining boards to non-shaft side[1] Board type	Lining thickness	Maximum partition height[2]	Stud size	Sound insulation R_w[3] No insulation	Sealed structure[4] plus 25mm Isover APR 1200	Duty rating[5]	Approx. weight	System reference
	mm		mm	mm	mm	dB	dB		kg/m²	
60 minutes fire resistance EN										
1	100	FireLine	2 x 12.5	4400	60	40	44	Severe	39	A306002/012
1	110	FireLine	2 x 12.5	4400	70	40	44	Severe	39	A306002/012
1	132	FireLine	2 x 12.5	6000	92	45	47	Severe	40	A306005/014
2	186	FireLine	2 x 12.5	6000	146	48	52	Severe	42	A306008/020
90 minutes fire resistance EN										
1	105	FireLine	2 x 15	4500	60	42	45	Severe	43	A306003/023
1	115	FireLine	2 x 15	4500	70	42	45	Severe	43	A306003/023
1	137	FireLine	2 x 15	6000	92	44	46	Severe	44	A306006/025
2	191	FireLine	2 x 15	6000	146	48	50	Severe	46	A306009/028
120 minutes fire resistance EN										
3	120	FireLine	3 x 15	4500	60	43	48	Severe	55	A306037
3	130	FireLine	3 x 15	4500	70	43	48	Severe	55	A306037
3	152	FireLine	3 x 15	6000	92	45	49	Severe	56	A306038
4	206	FireLine	3 x 15	6000	146	49	53	Severe	58	A306034

[1] For improved durability and impact resistance, the outer layer of Gyproc FireLine can be replaced with a layer of 15mm Gyproc DuraLine.
[2] The maximum heights quoted are limited by the fire state field of application or by limiting deflection of L/240 at 200 Pa, whichever is the more onerous.
[3] The acoustic performance figures quoted include **StairWall** partitions with deflection heads.
[4] Gyproc CoreBoard and first layer of lining board are bedded onto Gyproc Sealant, as required for pressurised air shafts, in addition to normal sealing.
[5] Estimated rating.

NB The fire resistance and sound insulation performances are for imperforate partitions, but incorporating deflection heads, with all joints taped and filled, or skimmed according to British Gypsum's recommendations. The quoted performances are achieved only if British Gypsum components are used throughout, and the Company's fixing recommendations are strictly observed. Any variation in the specifications should be checked with British Gypsum.

NB Gypframe Extra Deep Flange Floor & Ceiling Channel or 'J' Channel should be used at the head. For the base Gypframe Floor & Ceiling Channel should be used for heights up to 4200mm, Gypframe Deep Flange Floor & Ceiling Channel should be used for heights between 4200mm and 8000mm, Gypframe Extra Deep Flange Floor & Ceiling Channel should be used for heights in excess of 8000mm.

Table 2b – StairWall (vertical elements)
Solutions to satisfy the requirements of *BS 476: Part 22: 1987*

1

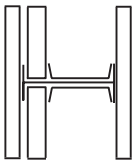

Gypframe 60, 70 or 92mm 'I' Stud or Gypframe 146 TI 90 Tabbed 'I' Stud framework with Gyproc CoreBoard between studs, secured by Gypframe Retaining Channel. 25mm Isover APR 1200 in cavity (optional). Lining boards to both sides, see table.

Detail	Partition thickness	Lining boards to both sides[1]		Maximum partition height[2]	Stud size	Sound insulation R_w[3]		Duty rating[5]	Approx. weight	System reference
		Board type	Lining thickness			No insulation	Sealed structure[4] plus 25mm Isover APR 1200			
	mm		mm	mm	mm	dB	dB		kg/m²	
90 minutes fire resistance BS										
1	87	FireLine	1 x 12.5	4400	60	42	45	Medium	39	A306046/048
120 minutes fire resistance BS										
1	92	FireLine	1 x 15	4400	60	42	47	Heavy	43	A306047/049

[1] For improved durability and impact resistance, Gyproc FireLine can be replaced with a layer of 15mm Gyproc DuraLine. On single layer linings this will improve duty rating to Severe Duty.
[2] Based on a limiting deflection of L/240 at 200 Pa.
[3] The acoustic performance figures quoted include **StairWall** partitions with deflection heads.
[4] Gyproc CoreBoard and first layer of lining board are bedded onto Gyproc Sealant, as required for pressurised air shafts, in addition to normal sealing.
[5] Estimated rating.

NB The fire resistance and sound insulation performances are for imperforate partitions, but incorporating deflection heads, with all joints taped and filled, or skimmed according to British Gypsum's recommendations. The quoted performances are achieved only if British Gypsum components are used throughout, and the Company's fixing recommendations are strictly observed. Any variation in the specifications should be checked with British Gypsum.

NB Gypframe Extra Deep Flange Floor & Ceiling Channel or 'J' Channel should be used at the head. For the base Gypframe Floor & Ceiling Channel should be used for heights up to 4200mm, Gypframe Deep Flange Floor & Ceiling Channel should be used for heights between 4200mm and 8000mm, Gypframe Extra Deep Flange Floor & Ceiling Channel should be used for heights in excess of 8000mm.

Performance (▶ Refer to **section 3 - Basic principles of system design**)

EN

Table 3a – ShaftWall (horizontal elements)
Solutions to satisfy the requirements of *BS EN 1364-2: 1999*

1

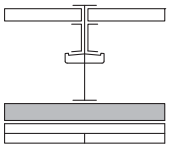

Gypframe 60, 70 or 92mm 'I' Stud or Gypframe 146 TI 90 Tabbed 'I' Stud frames with Gyproc CoreBoard between studs, secured by Gypframe Retaining Channel. 25mm Isover APR 1200 in cavity (optional). Gypframe MF5 Ceiling Sections fixed to ceiling side at 450mm centres. Lining boards to ceiling side, see table.

2

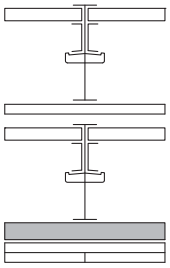

Two Gypframe 146 TI 90 Tabbed 'I' Stud frames with Gyproc CoreBoard between studs, secured by Gypframe Retaining Channel. 25mm Isover APR 1200 in cavity (optional). On the lower framework only, Gypframe MF5 Ceiling Sections fixed to ceiling side at 450mm centres. Lining boards to ceiling side, see table.

3

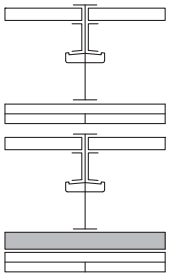

Two Gypframe 146 TI 90 Tabbed 'I' Stud frames with Gyproc CoreBoard between studs, secured by Gypframe Retaining Channel. 25mm Isover APR 1200 in cavity (optional). On the lower framework only, Gypframe MF5 Ceiling Sections fixed to ceiling side at 450mm centres. Lining boards to ceiling side, see table.

Detail	Membrane thickness	Lining boards to ceiling side: Board type	Lining boards to ceiling side: Lining thickness	Maximum span[1]	Stud size	Sound insulation R_w: No insulation	Sound insulation R_w: Sealed structure[2] plus 25mm Isover APR 1200	Approx. weight	System reference
	mm		mm	mm	mm	dB	dB	kg/m²	
60 minutes fire resistance EN									
1	120	FireLine	2 x 15	2500	60	42	45	39	C106053
1	130	FireLine	2 x 15	2800	70	42	45	39	C106053
1	152	FireLine	2 x 15	3000	92	44	46	39	C106054
1	206	FireLine	2 x 15	4400	146	48	50	39	C106055
90 minutes fire resistance EN									
2	397	FireLine upper frame FireLine lower frame	1 x 15 2 x 15	4400	146	48	50	77	C106057
120 minutes fire resistance EN									
3	422	FireLine upper frame FireLine lower frame	2 x 15 2 x 15	4000	146	48	50	88	C106056

[1] Based on a limiting deflection of L/400.
[2] Gyproc CoreBoard and first layer of lining board are bedded onto Gyproc Sealant, as required for pressurised air shafts, in addition to normal sealing.

NB The fire resistance and sound insulation performances are for imperforate ceilings incorporating boards with all joints taped and filled, or skimmed according to British Gypsum's recommendations. The quoted performances are achieved only if British Gypsum components are used throughout, and the Company's fixing recommendations are strictly observed. Any variation in the specifications should be checked with British Gypsum.

NB The fire resistances quoted are for imperforate constructions.

NB **ShaftWall** used horizontally should not be used for materials storage or access for personnel.

NB Gypframe Extra Deep Flange Floor & Ceiling Channel or 'J' Channel should be used at perimeter.

BS Table 3b – ShaftWall (horizontal elements)
Solutions to satisfy the requirements of *BS 476: Part 22: 1987*

1

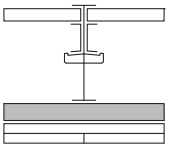

Gypframe 60, 70 or 92mm 'I' Stud or Gypframe 146 TI 90 Tabbed 'I' Stud frames with Gyproc CoreBoard between studs, secured by Gypframe Retaining Channel. 25mm Isover APR 1200 in cavity (optional). Gypframe MF5 Ceiling Sections fixed to ceiling side at 450mm centres. Lining boards to ceiling side, see table.

2

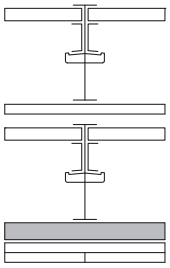

Two Gypframe 146 TI 90 Tabbed 'I' Stud frames with Gyproc CoreBoard between studs, secured by Gypframe Retaining Channel. 25mm Isover APR 1200 in cavity (optional). On the lower framework only, Gypframe MF5 Ceiling Sections fixed to ceiling side at 450mm centres. Lining boards to ceiling side, see table.

3

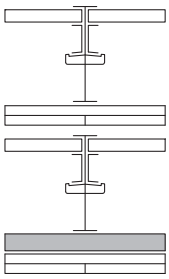

Two Gypframe 146 TI 90 Tabbed 'I' Stud frames with Gyproc CoreBoard between studs, secured by Gypframe Retaining Channel. 25mm Isover APR 1200 in cavity (optional). On the lower framework only, Gypframe MF5 Ceiling Sections fixed to ceiling side at 450mm centres. Lining boards to ceiling side, see table.

Detail	Membrane thickness	Lining boards to ceiling side		Maximum span[1]	Stud size	Sound insulation R_w		Approx. weight	System reference
		Board type	Lining thickness			No insulation	Sealed structure[2] plus 25mm Isover APR 1200		
	mm		mm	mm	mm	dB	dB	kg/m²	
60 minutes fire resistance BS									
1	120	FireLine	2 x 15	2500	60	42	45	39	C106053
1	130	FireLine	2 x 15	2800	70	42	45	39	C106053
1	152	FireLine	2 x 15	3700	92	44	46	39	C106054
1	206	FireLine	2 x 15	5100	146	48	50	39	C106055
90 minutes fire resistance BS									
2	397	FireLine upper frame FireLine lower frame	1 x 15 2 x 15	5100	146	48	50	77	C106057
120 minutes fire resistance BS									
3	422	FireLine upper frame FireLine lower frame	2 x 15 2 x 15	5100	146	48	50	88	C106056

[1] Based on a limiting deflection of L/400.
[2] Gyproc CoreBoard and first layer of lining board are bedded onto Gyproc Sealant, as required for pressurised air shafts, in addition to normal sealing.

NB The fire resistance and sound insulation performances are for imperforate ceilings incorporating boards with all joints taped and filled, or skimmed according to British Gypsum's recommendations. The quoted performances are achieved only if British Gypsum components are used throughout, and the Company's fixing recommendations are strictly observed. Any variation in the specifications should be checked with British Gypsum.

NB The fire resistances quoted are for imperforate constructions.

NB **ShaftWall** used horizontally should not be used for materials storage or for access for personnel.

NB Gypframe Extra Deep Flange Floor & Ceiling Channel or 'J' Channel should be used at perimeter.

Performance (▶ Refer to **section 3 - Basic principles of system design**)

Table 4a - ShaftWall (vertical elements) - limiting heights at various air pressures and allowable deflections

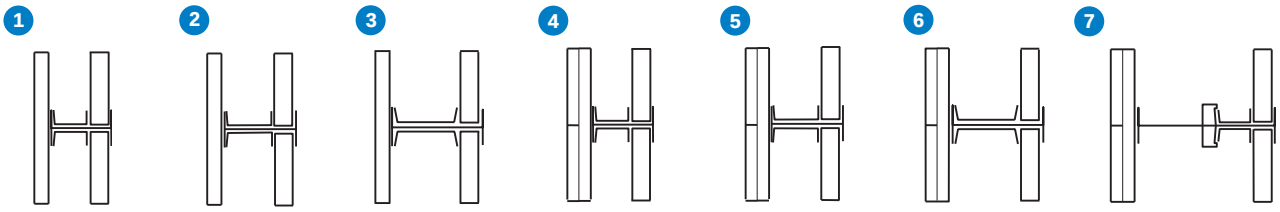

1. Gypframe 60 I 70 'I' Stud framework with one layer of 15mm Gyproc FireLine[1].
2. Gypframe 70 I 70 'I' Stud framework with one layer of 15mm Gyproc FireLine[1].
3. Gypframe 92 I 90 'I' Stud framework with one layer of 15mm Gyproc FireLine[1].
4. Gypframe 60 I 70 'I' Stud framework with two layers of 12.5mm Gyproc FireLine[1].
5. Gypframe 70 I 70 'I' Stud framework with two layers of 12.5mm Gyproc FireLine[1].
6. Gypframe 92 I 90 'I' Stud framework with two layers of 12.5mm Gyproc FireLine[1].
7. Gypframe 146 TI 90 Tabbed 'I' Stud framework with two layers of 12.5mm Gyproc FireLine[1].

Detail	System	Allowable deflection	Limiting height (mm) at stated air pressure (Pa) 200	240	300	360	400	480	500	600	650	System reference
1	ShaftWall	L/125	5000	4700	4400	4100	4000	3800	3700	3500	3400	A306001/010
		L/240	4200	4000	3700	3500	3300	3200	3100	2900	2800	
		L/360	3700	3500	3300	3100	2900	2800	2700	2600	2500	
2	ShaftWall	L/125	5000	4700	4400	4100	4000	3800	3700	3500	3400	Based on A306001/010
		L/240	4200	4000	3700	3500	3300	3200	3100	2900	2800	
		L/360	3700	3500	3300	3100	2900	2800	2700	2600	2500	
3	ShaftWall	L/125	7500	7100	6600	6200	6000	5700	5500	5200	5100	A306004/011
		L/240	6000	5700	5300	5000	4800	4600	4400	4200	4100	
		L/360	5200	4900	4600	4300	4200	4000	3900	3600	3500	
4	ShaftWall	L/125	5200	4900	4600	4300	4200	4000	3800	3600	3500	A306002/012
		L/240	4400	4100	3800	3600	3500	3300	3200	3000	2900	
		L/360	3800	3600	3300	3100	3000	2900	2800	2600	2500	
5	ShaftWall	L/125	5200	4900	4600	4300	4200	4000	3800	3600	3500	Based on A306002/012
		L/240	4400	4100	3800	3600	3500	3300	3200	3000	2900	
		L/360	3800	3600	3300	3100	3000	2900	2800	2600	2500	
6	ShaftWall	L/125	7900	7400	6900	6500	6300	5900	5800	5500	5300	A306005/014
		L/240	6400	6000	5600	5200	5000	4800	4700	4400	4300	
		L/360	5600	5200	4900	4600	4400	4200	4100	3900	3800	
7	ShaftWall	L/125	9800	9200	8600	8100	7800	7500	7200	6800	6600	A306008/020
		L/240	7900	7400	6900	6500	6200	6000	5800	5500	5300	
		L/360	6900	6500	6000	5600	5500	5200	5100	4800	4600	

Table 4a gives the limiting heights for **ShaftWall** systems when subjected to air pressures ranging from 200 Pa through to 650 Pa and at three allowable deflection levels - L/125, L/240, L/360. Partition heights are normally quoted for air pressures of 200 Pa at an allowable deflection of L/240.

When the fire performance of **ShaftWall** is specified in terms of *EN 1364-1: 1999*, then the maximum height cannot exceed that given in the relevant table in this book, irrespective of air pressure or allowable deflection.

[1] Gyproc FireLine can be replaced with Gyproc DuraLine or Glasroc F FIRECASE.

NB Gypframe Extra Deep Flange Floor & Ceiling Channel or 'J' Channel should be used at the head. For the base Gypframe Floor & Ceiling Channel should be used for heights up to 4200mm, Gypframe Deep Flange Floor & Ceiling Channel should be used for heights between 4200mm and 8000mm, Gypframe Extra Deep Flange Floor & Ceiling Channel should be used for heights in excess of 8000mm.

Table 4b - ShaftWall / StairWall (vertical elements) - limiting heights at various air pressures and allowable deflections

1

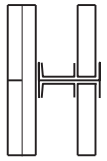

Gypframe 60 I 70 'I' Stud framework with two layers of 15mm Gyproc FireLine[1].

2

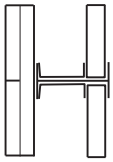

Gypframe 70 I 70 'I' Stud framework with two layers of 15mm Gyproc FireLine[1].

3

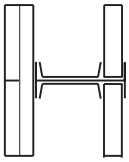

Gypframe 92 I 90 'I' Stud framework with two layers of 15mm Gyproc FireLine[1].

4

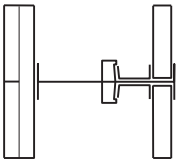

Gypframe 146 TI 90 Tabbed 'I' Stud framework with two layers of 15mm Gyproc FireLine[1].

5

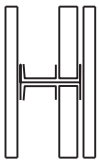

Gypframe 60 I 70 'I' Stud framework with one layer of 12.5mm Gyproc FireLine on each side.

6

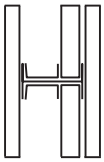

Gypframe 60 I 70 'I' Stud framework with one layer of 15mm Gyproc FireLine on each side.

Detail	System	Allowable deflection	Limiting height (mm) at stated air pressure (Pa) 200	240	300	360	400	480	500	600	650	System reference
1	ShaftWall	L/125	5200	4900	4600	4300	4100	4000	3800	3600	3500	A306003/023
		L/240	4500	4200	3900	3700	3500	3400	3300	3100	3000	
		L/360	3900	3700	3400	3200	3100	3000	2900	2700	2600	
2	ShaftWall	L/125	5200	4900	4600	4300	4100	4000	3800	3600	3500	Based on
		L/240	4500	4200	3900	3700	3500	3400	3300	3100	3000	A306003/023
		L/360	3900	3700	3400	3200	3100	3000	2900	2700	2600	
3	ShaftWall	L/125	8400	7900	7300	6900	6600	6400	6200	5800	5600	A306006/025
		L/240	6700	6300	5900	5500	5300	5100	5000	4700	4500	
		L/360	5600	5300	4900	4600	4500	4300	4100	3900	3800	
4	ShaftWall	L/125	9900	9300	8600	8100	7800	7500	7200	6800	6600	A306009/028
		L/240	7900	7400	6900	6500	6300	6000	5800	5500	5300	
		L/360	6900	6500	6000	5700	5500	5300	5100	4800	4700	
5	StairWall	L/125	5300	5000	4700	4400	4200	4100	3900	3700	3600	Based on
		L/240	4400	4100	3800	3600	3500	3300	3200	3000	2900	A306046/048
		L/360	3900	3600	3400	3200	3100	2900	2800	2700	2600	
6	StairWall	L/125	5400	5000	4700	4400	4200	4100	3900	3700	3600	A306047/049
		L/240	4400	4100	3800	3600	3500	3300	3200	3000	2900	
		L/360	3900	3600	3400	3200	3100	2900	2800	2700	2600	

Table 4b gives the limiting heights for **ShaftWall** and **StairWall** systems when subjected to air pressures ranging from 200 Pa through to 650 Pa and at three allowable deflection levels - L/125, L/240, L/360. Partition heights are normally quoted for air pressures of 200 Pa at an allowable deflection of L/240. Refer to Limiting heights at different air pressures, in **Design** section.

When the fire performance of **ShaftWall** is specified in terms of *EN 1364-1: 1999*, then the maximum height cannot exceed that given in the relevant table in this book, irrespective of air pressure or allowable deflection.

[1] Gyproc FireLine can be replaced with Gyproc DuraLine or Glasroc F FIRECASE.

NB Gypframe Extra Deep Flange Floor & Ceiling Channel or 'J' Channel should be used at the head. For the base Gypframe Floor & Ceiling Channel should be used for heights up to 4200mm, Gypframe Deep Flange Floor & Ceiling Channel should be used for heights between 4200mm and 8000mm, Gypframe Extra Deep Flange Floor & Ceiling Channel should be used for heights in excess of 8000mm.

Design

Planning - key factors
The position of services should be pre-determined and their installation planned into the frame erection stage. Timber sole plates should be considered, where allowed, where the floor is uneven.
▶ Refer to **section 3.5 – Service installations**.

It is important that a good standard of control is exercised on site to ensure that the adoption of drylining techniques at such an early stage of construction is fully integrated into the planning and site progress. If the building envelope is left unsealed while **ShaftWall** or **StairWall** is under construction, Gyproc FireLine MR, Gyproc DuraLine MR or Glasroc F FIRECASE should be used for the lining. All penetrations will need to be adequately fire-stopped.

Limiting heights at different air pressures
The maximum heights quoted in the performance tables are based on a limiting deflection of L/240 at 200 Pa, or by the fire state field of application. In practice, deflection from L/125 to L/360 may be allowed and pressure conditions between 200 Pa and 650 Pa may be encountered. These variations will affect the maximum wall height. Refer to **Tables 4a** and **4b**.

Deflection criteria
Partitions built to a maximum height based on L/125 at 200 Pa will exibit greater deflection compared to partitions built to a maximum height based on L/240 at 200 Pa. Partitions with deflection characteristics outside the standard L/240 criteria will exhibit more flex during installation and in general use, and therefore we recommend you verify the acceptibility of the deflections with the relevant interested parties before specifying / installing partitions based on L/125 criteria.

Connection to the structure
Structural steelwork and its associated connections often result in complex junctions around shafts. If **ShaftWall** or **StairWall** is built on the same line as the beamwork framing the shaft, problems may arise in trying to seal the wall up to the steelwork. It is recommended that, wherever possible, the wall should be located to one side of the beams, and fixed from structural floor to structural soffit.

Fixing the floor channel
The floor channel must have continuous support along its length to maintain specified performance levels. If continuous support is not provided by the structure, e.g. **Z**-sections running transverse to a steel beam, the designer should detail the installation of a rigid non-combustible material between the **Z**-sections. In situations where the floor channel is fixed to diagonal structural steel, the studs should be accurately scribed to the rake of the channel to maintain the full bearing surface.

Fixing to metal decking
Where **ShaftWall** or **StairWall** is to be located transverse to the profiles of the decking, all slots or perforations above the head channel should be sealed using a proprietary fire barrier or fire spray. Fire-stopping material can be applied prior to the head channel being positioned, providing that any surplus is removed flush with the steel decking.

Fixing to fire-sprayed and stone mineral wool protected structural steel
If it should be necessary to build the wall on the line of steel beams, then a method must be used to minimise the disruption of the fire protection.

Z-section, with a depth equal to the thickness of the fire protection being applied, should be fixed to the beam at maximum 600mm centres prior to application of the fire protection.

The dimensions of the **Z**-section should be determined by the designer, but as a guide should not be less than 2mm gauge steel. The applied fire protection incorporating the **Z**-section should then provide a continuous fire-stopped support above the head channel of the **ShaftWall** or **StairWall** when this is secured into position (see **Construction details – 29**). The head channel should be securely fixed to each **Z**-section using two Gyproc Wafer Head Jack-Point Screws. Where it is necessary to fix **Z**-sections to previously fire protected beams, making good above the 'J' channel and around the **Z**-sections is essential.

Fixing to structural steel encasements
Where **ShaftWall** abuts a column or beam encasement, the framing will generally require fixing to the structural steelwork.

Where **ShaftWall** abuts the web of the steelwork a **Z**-section can be located to provide a fixing point level with the flanges of the steelwork. With **FireCase** encasements it may be possible to fix directly to the board cladding subject to fire resistance and loading criteria.
▶ Refer to **section 9 – FireCase**.

Off-set fixing
Where **ShaftWall** is off the line of the steelwork or supporting structure, it can be cantilevered back using **Z**-section or flat steel plate as determined by the designer. These will require separate fire protection to maintain the fire performance of the system.

Wall positioned adjacent to steel beams
Where **ShaftWall** abuts the floor decking adjacent to a steel beam, provision will be required to maintain fire protection of the composite structure, e.g. filling voids at head of partition with suitable fire-stopping materials.

Pressurised airshafts and service ducts
The use of pressure conditions in various types of shaft / duct requires that the boards should be sealed into the framing members using Gyproc Sealant in addition to the normal sealing of the framing to adjoining structures. It is essential that these areas are identified at a very early stage of the contract, and that other trades are instructed to recognise the need for the application of sealant and its replacement if subsequently damaged or removed.

In order that the integrity of the pressurised system can be maintained, Gyproc Sealant should be specified for all board-to-metal applications, and the sealing of Gyproc CoreBoard (or Glasroc F FIRECASE) to the framing (see **Construction details – 19 - 22**).

▶ Please refer to **section 3 - Basic principles of system design** for general guidance

Deflection heads
Deflection heads, by definition, must be able to move and, therefore, achieving an airtight seal is difficult. Inevitably, this will have a detrimental effect on the acoustic performance of any wall that incorporates deflection at the head. In most cases, a suspended ceiling will assist in minimising loss of performance. Standard head details are shown in **Construction details – 11 - 19**. Gyproc FireStrip must be applied as a continuous seal where indicated to maintain fire performance. Also, board fixings must not be inserted above the uppermost line depicted by the red arrow in each drawing. Designs incorporating Gypframe Retaining Clips are **not suitable** for live loads. Where greater deflection needs to be accommodated, contact the British Gypsum Drywall Academy for further guidance.

Control joints
Control joints may need to be considered in conditions where excessive movement is likely to occur, or to coincide with constructional expansion joints. In order that the deflection criteria can be maintained throughout the building, it is necessary to introduce horizontal movement joints in the lining where this would normally be required to extend through the height of the building, e.g. stairwells.

The horizontal movement joint can be accommodated adjacent to the floor slab (see **Construction details – 30**).

Doors
In the case of both normal access doors and lift doors, the door and frame assembly must have been shown by a fire resistance test to achieve the required standard of performance in this form of construction.

Lift doors must be substantiated in conjunction with **ShaftWall** complete with their framing members and transom panels.
To achieve a satisfactory level of compatibility, a suitable starter channel should be mechanically fixed to the door frame at 300mm centres (see **Construction details – 26**).

Access for maintenance
For access doors, openings should be framed to avoid impairing the structural or fire-resistant properties of **ShaftWall**. To provide an opening ready to receive a door set, the jambs to storey height should be capped with Gypframe 'J' Channel incorporating a plasterboard packer. A pre-formed spandrel panel assembled between starter channels (see **Construction details – 25**) should be inserted between jambs and engaged into the head channel, retaining the 15mm gap for deflection at the head. Support is provided by a Gypframe 'J' Channel transom. The door frame is secured to both Gypframe 'I' Stud and Gypframe 'J' Channel jambs and also to the transom member (see **Construction details – 27**).

A range of Gyproc Profilex Access Panels providing fire integrity is available from Artex. For more information visit www.artexltd.com
▶ Refer to **section 14 – Products, Access panels**.

Service penetrations
Penetrations of fire-resistant constructions for services need careful consideration to ensure that the integrity of the element is not impaired, and also that the services themselves do not act as the mechanism of fire spread.
▶ Refer to **section 3.5 – Service installations**.

Independent support
When designing for the installation of services such as fire dampers and associated ductwork through a **GypWall** partition, consideration should be given to the size and weight of the damper – this will determine whether it can be supported directly from the partition or needs to be independently supported from the structure.
▶ Refer to **section 3.5 – Service installations**.

Opening bridging studs
Openings should be constructed using channels for the trimming members. The web of the channel should be rebated to allow the flanges to oversail the stud.
The flanges are secured with two fixings. Channels are cut and inserted to maintain the 25mm gap surround and fixed to the trimming channels (see **Construction details – 23**).

Opening between studs
The opening is constructed using channels for the trimming members. The web should be rebated and the flanges allowed to oversail the studs. The stud is secured with two fixings. Channels are cut and inserted with the webs folded to provide fixings.
A plasterboard (or Glasroc F FIRECASE) packer is inserted adjacent to the stud.

Electrical services
The installation of electrical services should be carried out in accordance with *BS 7671*. The positions for light switches and other electrical outlets should be pre-determined in order that provision can be made for support, and also for the fire integrity of the system. Gypframe 99 FC 50 Fixing Channel should be cut to bridge adjoining studs, with the edges flattened to permit fixing. The fixing channel should be backed with stone mineral wool. Gyproc FireLine (or Glasroc F FIRECASE) linings should be cut to allow a close fitting entry of the switch box which can be secured to the fixing channel (see **Construction details – 7**). Back switch boxes with stone mineral wool to maintain fire integrity.

Horizontal ShaftWall
ShaftWall can be specified for horizontal applications as a free-spanning membrane with no support from the soffit.
The membrane can be constructed entirely from below and can achieve spans up to 5100mm and fire resistance up to 120 minutes. A typical application is for fire escape corridors.

Supporting partitions should be of at least the same fire resistance period as the horizontal **ShaftWall**. Specifications for horizontal **ShaftWall** are complex and detailed, and therefore enquiries should be emailed to bgtechnical.enquiries@bpb.com, giving as much detail as possible.

Board finishing
▶ Refer to **section 13 – Finishing systems and decorative effects**.

Construction details

1 Base

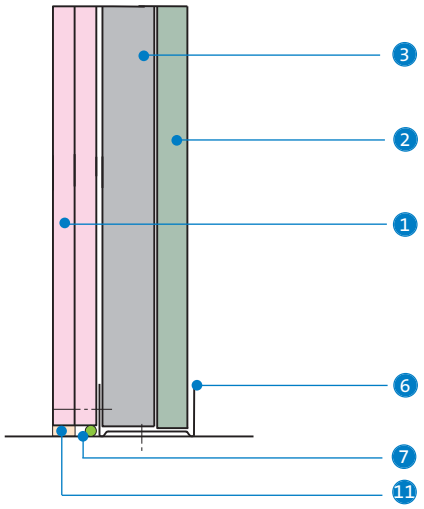

2 Junction with other elements

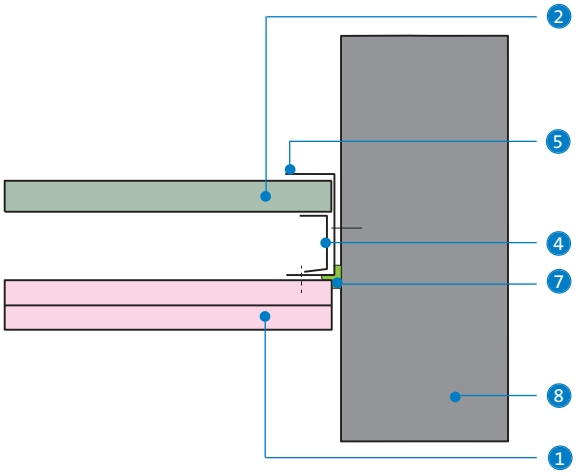

3 Junction with other elements (framework showing Gypframe Tabbed Starter Channel)

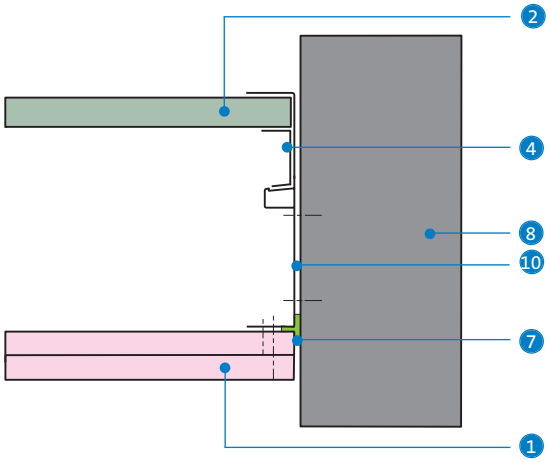

4 Intermediate stud

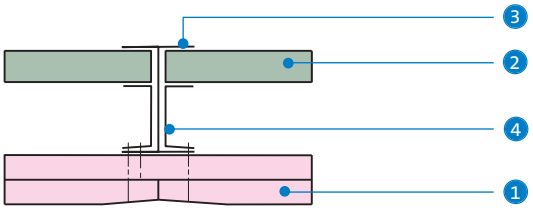

5 Intermediate stud (framework showing Gypframe Tabbed 'I' Stud)

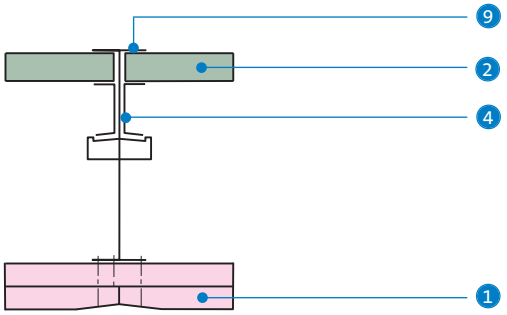

6 Partition junction (on-stud)

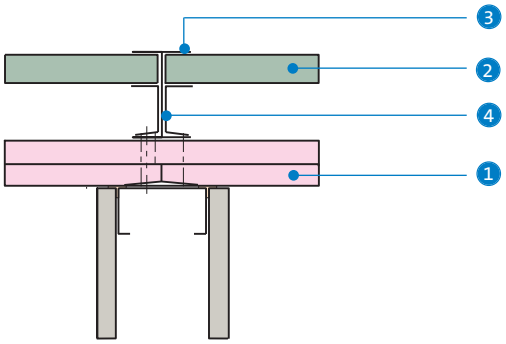

1. Gyproc FireLine [1]
2. Gyproc CoreBoard [2]
3. Gypframe 'I' Stud
4. Gypframe Retaining Channel
5. Gypframe Starter Channel
6. Gypframe Standard Floor & Ceiling Channel
7. Gyproc Sealant
8. Structure
9. Gypframe Tabbed 'I' Stud
10. Gypframe Tabbed Starter Channel
11. Bulk fill with Gyproc jointing materials (where gap exceeds 5mm)

[1] Replace with 15mm Glasroc F FIRECASE for systems with non-combustible linings.
[2] Replace with 20mm Glasroc F FIRECASE for systems with non-combustible linings.

7 Socket box

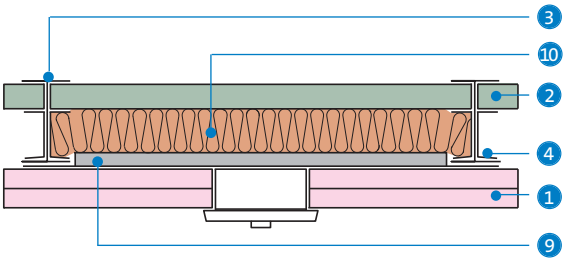

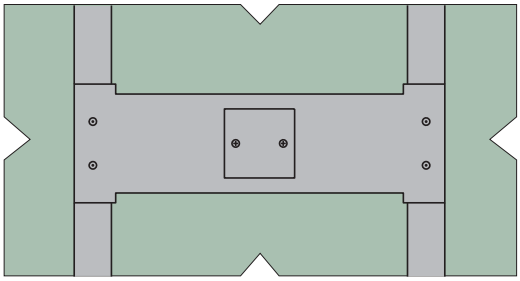

8 Horizontal Gyproc CoreBoard joints

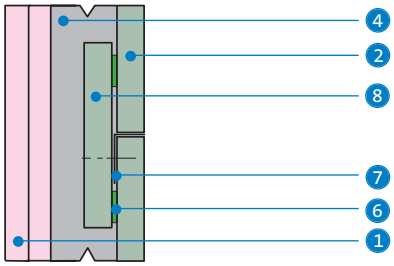

9 Internal corner

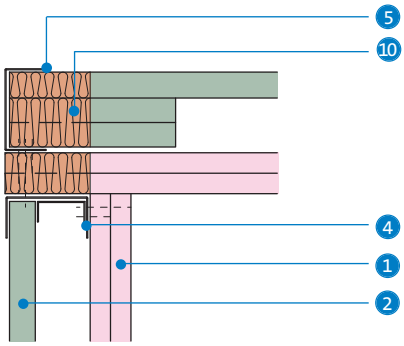

10 External corner

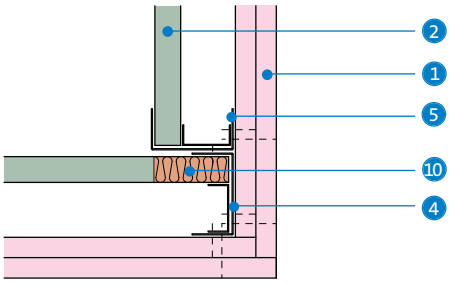

1 Gyproc FireLine [1]
2 Gyproc CoreBoard [2]
3 Gypframe 'I' Stud
4 Gypframe Retaining Channel
5 Gypframe Starter Channel
6 Gyproc Sealant
7 Gypframe GA3 Steel Angle
8 Gyproc CoreBoard strip (cut on site) [2]
9 Gypframe 99 FC 50 Fixing Channel
10 Stone mineral wool (by others)

[1] Replace with 15mm Glasroc F FIRECASE for systems with non-combustible linings.
[2] Replace with 20mm Glasroc F FIRECASE for systems with non-combustible linings.

Head details incorporating 15mm downward deflection

11 60mm framework (live loads) [3]

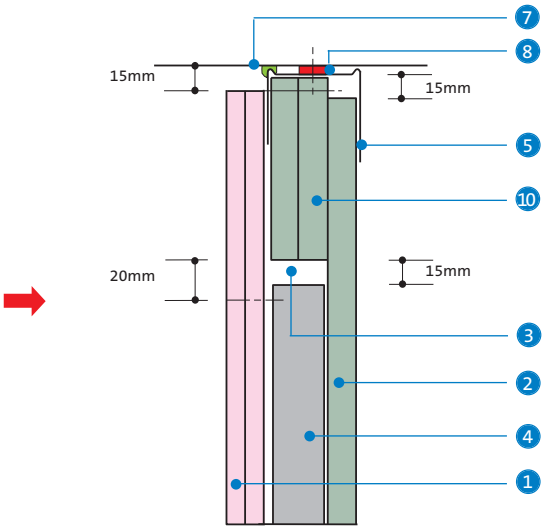

12 70mm framework (live loads)

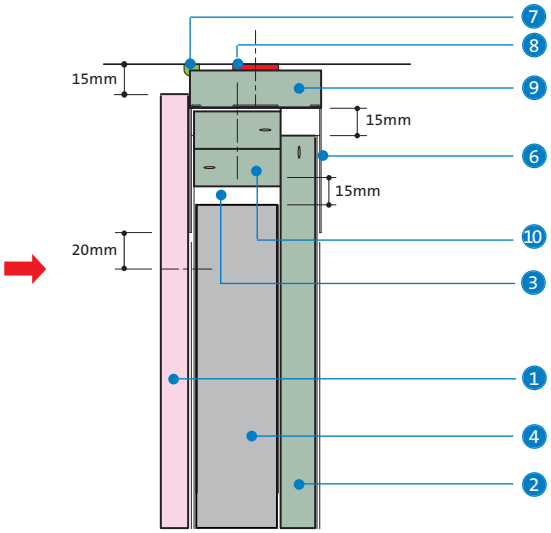

13 92mm framework (not suitable for live loads)

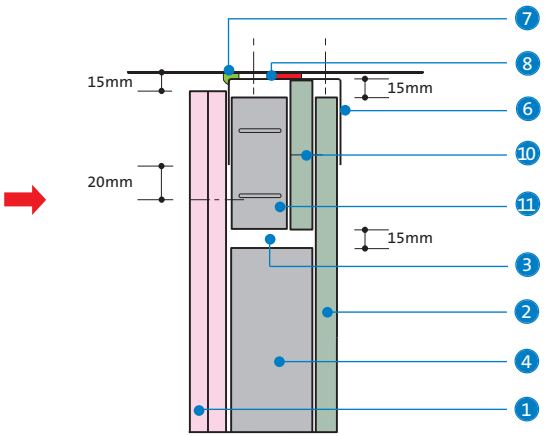

14 92mm framework (live loads)

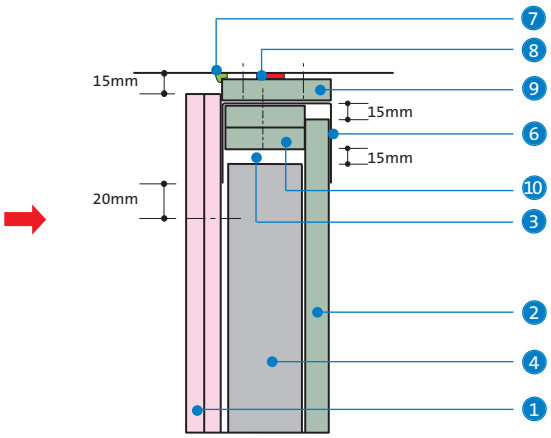

15 146mm framework (not suitable for live loads)

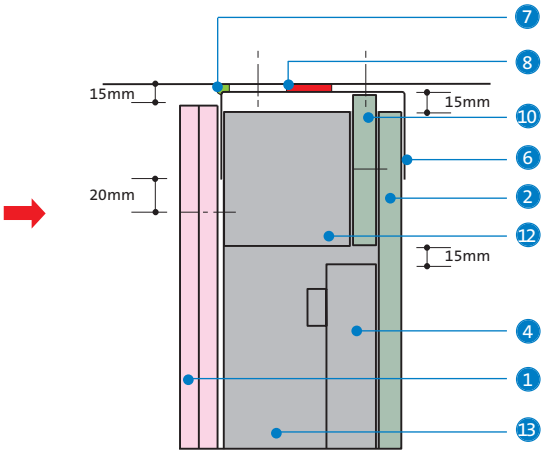

16 146mm framework (live loads)

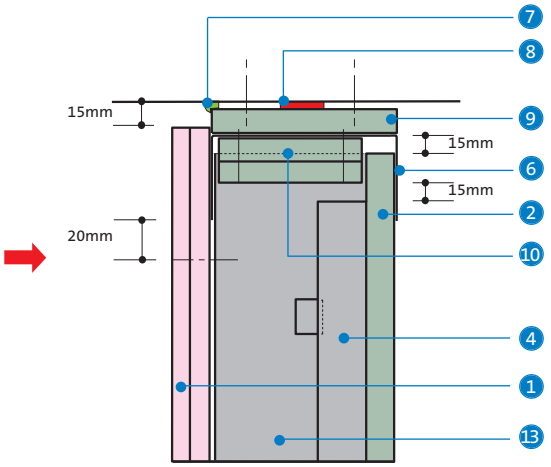

1. Gyproc FireLine [1]
2. Gyproc CoreBoard [2]
3. Gypframe 'I' Studs
4. Gypframe Retaining Channel
5. Gypframe 'J' Channel
6. Gypframe Extra Deep Flange Floor & Ceiling Channel
7. Gyproc Sealant
8. Gyproc FireStrip
9. Gyproc CoreBoard as dropped soffit [2]
10. Gyproc CoreBoard fire-stop [2]
11. Gypframe G108 Retaining Clip
12. Gypframe G109 Retaining Clip
13. Gypframe Tabbed 'I' Stud

[1] Replace with 15mm Glasroc F FIRECASE for systems with non-combustible linings.
[2] Replace with 20mm Glasroc F FIRECASE for systems with non-combustible linings.
[3] Vertical fire-stops are not recommended for non-combustible linings, use horizontal fire-stops similar to detail 12.

NB No fixings should be made through the boards into the flanges of the head channel. The arrow (➡) denotes the position of the uppermost board fixing.

Head details with Retaining Clips

17 Isometric of head incorporating Gypframe G108 Retaining Clip

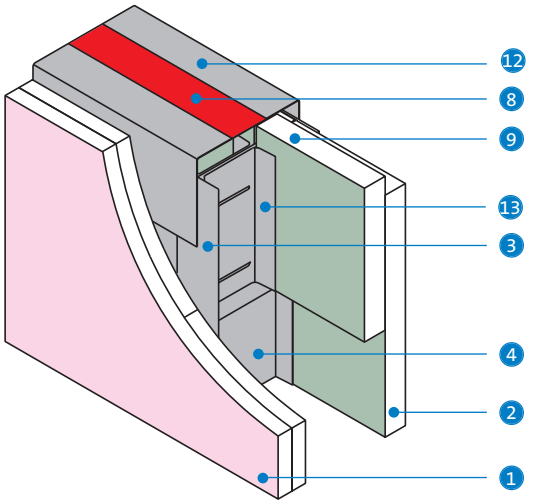

18 Isometric of head incorporating Gypframe G109 Retaining Clip

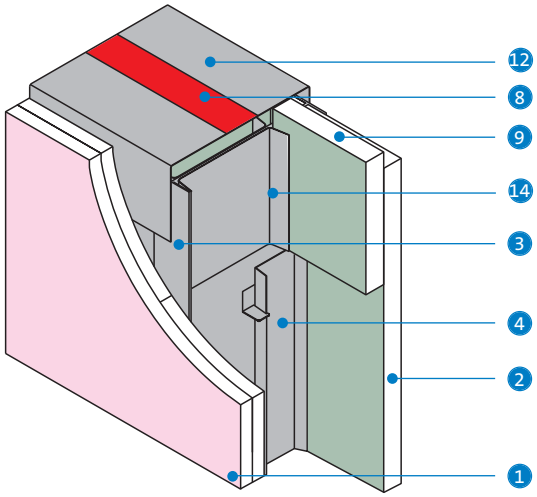

Sealing pressurised air shafts and service ducts

19 Head (sealed structure) [3]

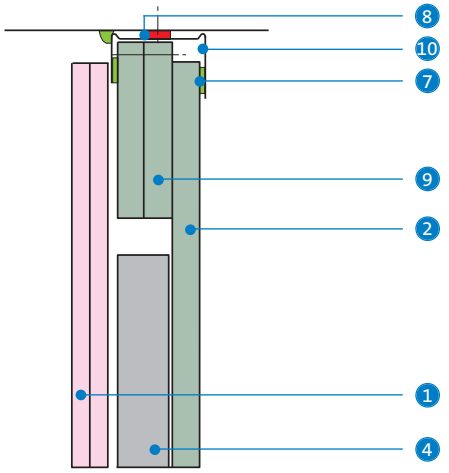

20 Intermediate stud (sealed structure)

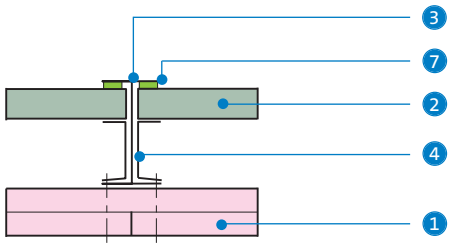

21 Base (sealed structure)

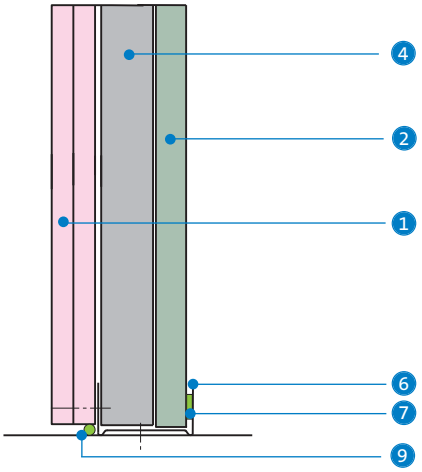

22 Junction with other elements (sealed structure)

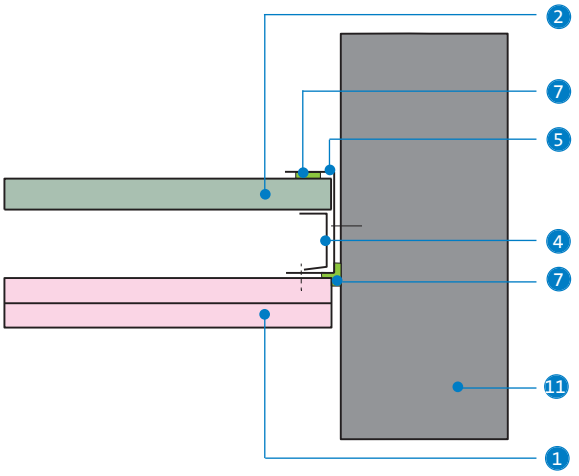

1. Gyproc FireLine [1]
2. Gyproc CoreBoard [2]
3. Gypframe 'I' Stud
4. Gypframe Retaining Channel
5. Gypframe Starter Channel
6. Gypframe Standard Floor & Ceiling Channel
7. Gyproc Sealant
8. Gyproc FireStrip
9. Gyproc CoreBoard fire-stop (cut on site) [2]
10. Gypframe 'J' Channel
11. Structure
12. Gypframe Extra Deep Flange Floor & Ceiling Channel
13. Gypframe G108 Retaining Clip
14. Gypframe G109 Retaining Clip

[1] Replace with 15mm Glasroc F FIRECASE for systems with non-combustible linings.
[2] Replace with 20mm Glasroc F FIRECASE for systems with non-combustible linings.
[3] Use alternative deflection head detail for systems with non-combustible linings.

Openings

23 Opening bridging studs

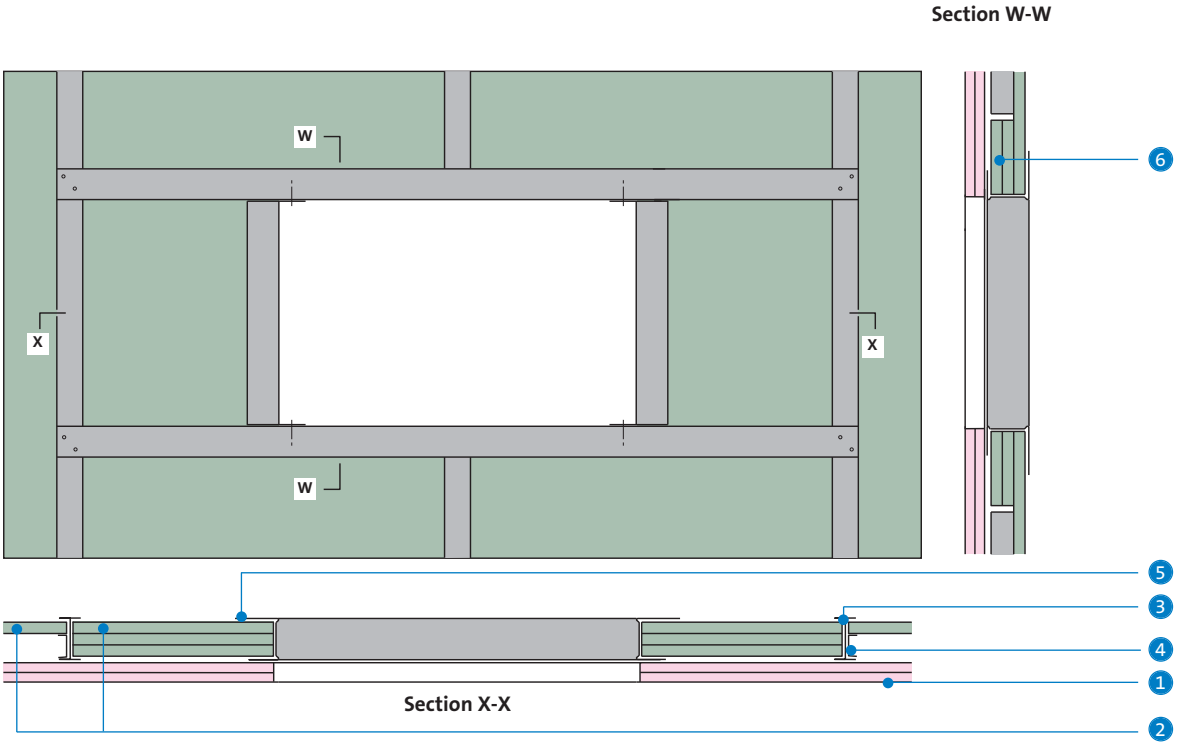

24 Opening between studs

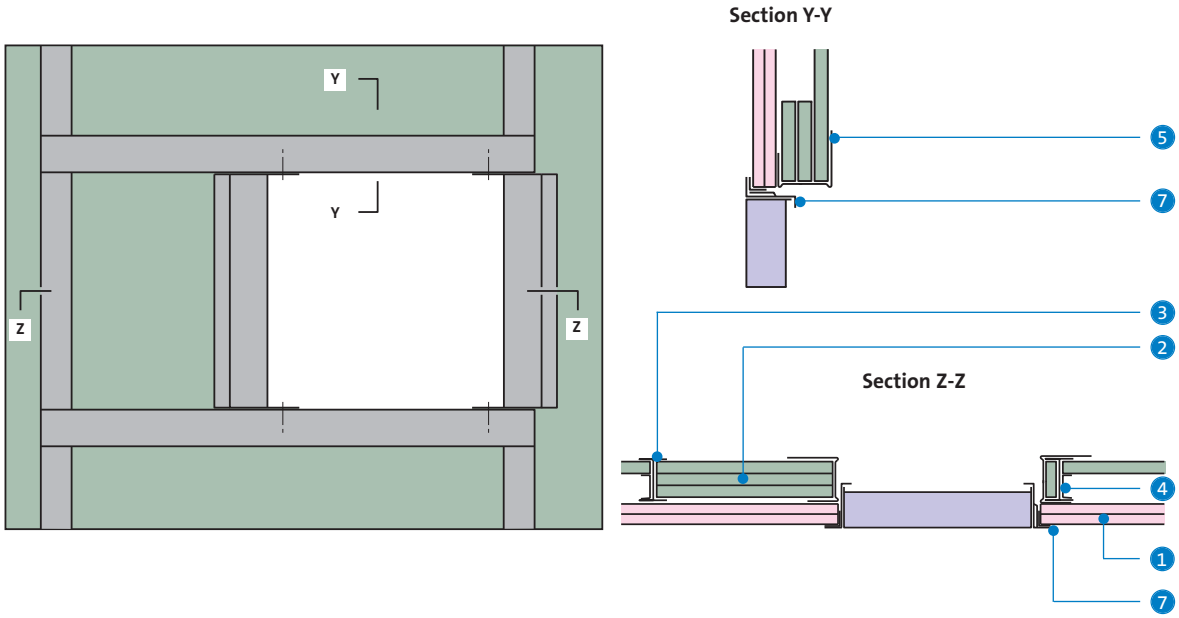

1. Gyproc FireLine
2. Gyproc CoreBoard
3. Gypframe 'I' Studs
4. Gypframe Retaining Channel
5. Gypframe 'J' Channel (to frame the opening)
6. Gyproc CoreBoard fire-stops (cut on site)
7. Access panel frame

25 Access door - spandrel panel

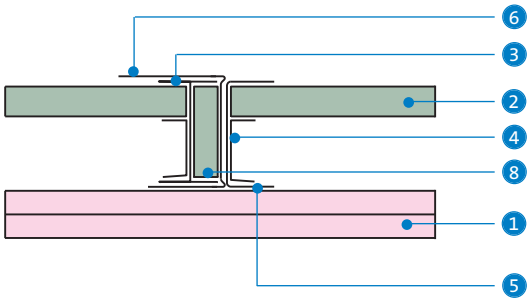

26 Lift door (Gypframe Starter Channel mechanically fixed to frame)

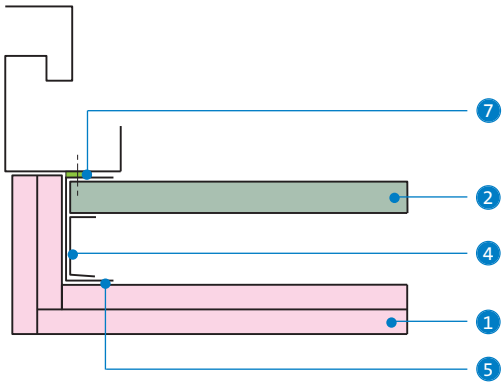

27 Access door jamb

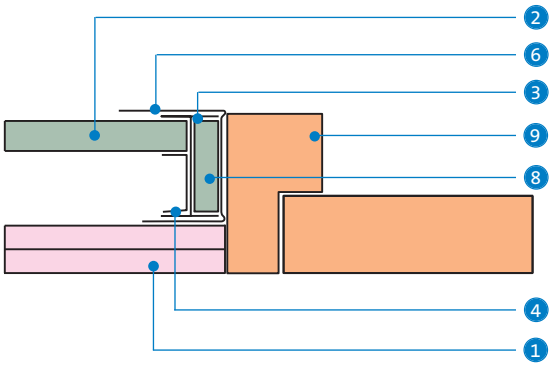

1. Gyproc FireLine [1]
2. Gyproc CoreBoard [2]
3. Gypframe 'I' Stud
4. Gypframe Retaining Channel
5. Gypframe Starter Channel
6. Gypframe 'J' Channel
7. Gyproc Sealant
8. Gyproc CoreBoard packer (cut on site) [2]
9. Door frame

[1] Replace with 15mm Glasroc F FIRECASE for systems with non-combustible linings.
[2] Replace with 20mm Glasroc F FIRECASE for systems with non-combustible linings.

28 Retro-fit non-performance partition junction

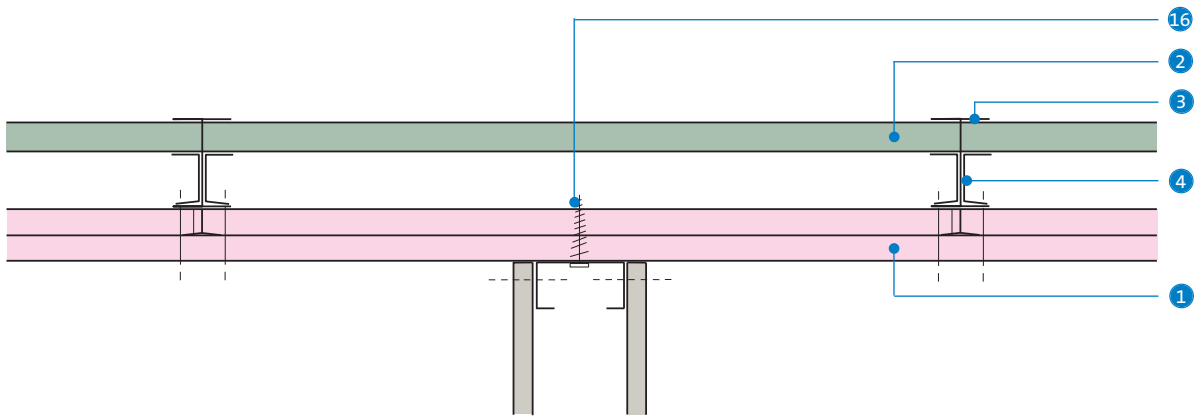

Connection to the structure

29 Fixing head channel to Z-section at underside of beams [3]

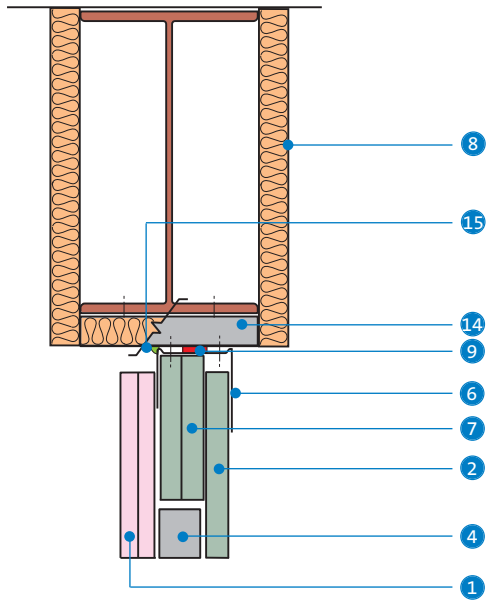

30 Movement joint at floor slab junction where lining boards continue

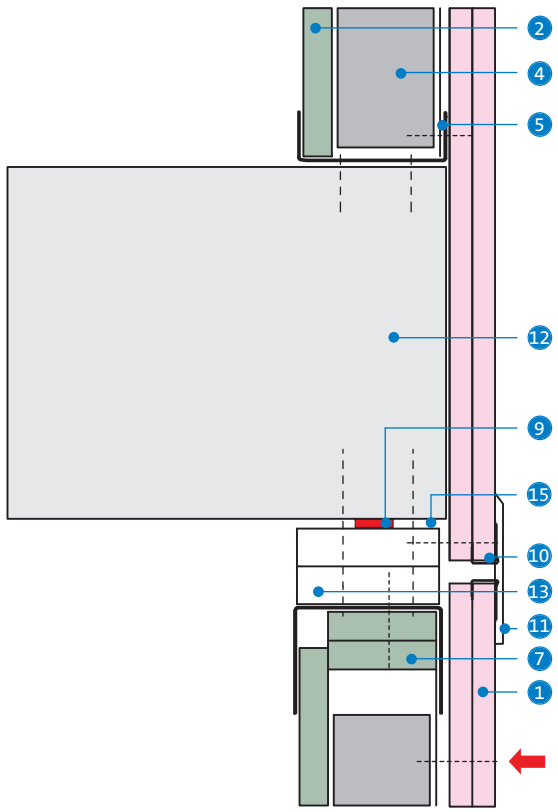

1. Gyproc FireLine [1]
2. Gyproc CoreBoard [2]
3. Gypframe 'I' Stud
4. Gypframe Retaining Channel
5. Gypframe Floor & Ceiling Channel
6. Gypframe 'J' Channel
7. Gyproc CoreBoard fire-stops [2]
8. Beam encasement
9. Gyproc FireStrip
10. Gyproc Edge Bead - if no cover strip is used
11. Cover strip (by others)
12. Structure
13. Glasroc F FIRECASE
14. Z-section
15. Gyproc Sealant
16. Suitable metal self-drive fixing (by others)

[1] Replace with 15mm Glasroc F FIRECASE for systems with non-combustible linings.
[2] Replace with 20mm Glasroc F FIRECASE for systems with non-combustible linings.
[3] Use alternative deflection head detail for systems with non-combustible linings.

NB No fixings should be made through the boards into the flanges of the head channel. The arrow ( ) denotes the position of the uppermost board fixing.

GypWall SECURE

Attack-resistant security wall system

This section includes updated information, added since it was first published in July 2009. Please see the WHITE BOOK update document for details.
Last updated 21/01/2011

Metro Centre, Gateshead

GypWall SECURE

40 R_w dB | 30 – 150 mins

GypWall SECURE is a robust but lightweight, non-loadbearing security wall, offering high resistance to determined attack.

A Gypframe GA4 Steel Angle

B 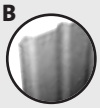 Gypframe Security Sheet

Key facts

- Lightweight alternative to traditional constructions
- Highly resistant to determined attack
- Satisfies *BS 5234* requirements up to and including Severe Duty[1]
- 150 minutes fire resistance and good sound insulation
- Only 70mm overall wall thickness
- Additional steel sheet can be installed for extra security

[1] Refer to **section 3.4.2 - Principles of robust design**.

Applications

A range of applications, including cash desks, data storage rooms and pharmacy stores.

Sector

- ✓ Office / commercial
- ✓ Education
- ✓ Custodial
- ✓ Retail
- ✓ Healthcare
- ✓ Sport and leisure
- ✓ Industrial

System components

Gypframe metal products

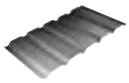

Security Sheet
Trapezoidal sheet steel section
1070mm x 3000mm x 0.7mm thickness
(covers 1000mm).

Approx. weight	10kg/m²
Depth of section	30mm

GA4 Steel Angle

Prime dimensions	50mm x 25mm x 0.7mm
Length	3600mm

Metal products (by others)

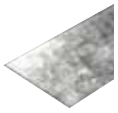

Flat galvanised steel sheet (optional)

Thickness	0.7mm

Board products

Glasroc F MULTIBOARD

Thickness	10mm
Width	1200mm

Fixing and finishing products

Gyproc Wafer Head Jack-Point Screws
Fixing lapped Gypframe Security Sheets together, and to fix optional flat galvanised steel sheet to Gypframe Security Sheet.

Gyproc Jack-Point Screws
Fixing boards to Gypframe Security Sheet.

M8 Throughbolt Anchors (by others)
M8 diameter, for fixing Gypframe GA4 Steel Angles to structure.

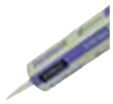

Gyproc Sealant
Sealing air paths for optimum sound insulation.

Gyproc jointing materials
For seamless jointing.

Thistle Board Finish or Thistle Multi-Finish
To provide a plaster skim finish.

or

Thistle Durafinish
To provide improved resistance to accidental damage.

Always use genuine branded British Gypsum components to qualify for **SpecSure®** lifetime warranty

Performance (▶ Refer to **section 3 - Basic principles of system design**)

EN — Table 1a – GypWall SECURE
Solutions to satisfy the requirements of *BS EN 1364-1: 1999*

1

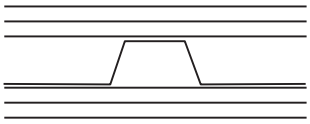

Two layers of board each side of Gypframe Security Sheet. Linings as in table.

Detail	Partition thickness mm	Board type	Lining thickness mm	Maximum partition height[1] mm	Sound insulation R_w dB	Duty rating	Approx. weight kg/m²	System reference
30 minutes fire resistance EN								
1	70	Glasroc F MULTIBOARD	2 x 10	3700[2]	40	Severe	50	G100001
120 minutes fire resistance EN								
1	70	Glasroc F MULTIBOARD	2 x 10	3000	40	Severe	50	G100001

[1] The maximum heights quoted are limited by the fire state field of application or by limiting deflection of L/240 at 200 Pa, whichever is the more onerous.
[2] Maximum recommended height is 3000mm based on using single sheets of Gypframe Security Sheet with no horizontal overlap. Heights of 3700mm are achievable. Contact the British Gypsum Drywall Academy for further guidance.

NB The fire resistance and sound insulation performances are for imperforate partitions, walls and ceilings incorporating boards with all joints taped and filled, or skimmed according to British Gypsum's recommendations. The quoted performances are achieved only if British Gypsum components are used throughout, and the Company's fixing recommendations are strictly observed. Any variation in the specifications should be checked with British Gypsum.

BS — Table 1b – GypWall SECURE
Solutions to satisfy the requirements of *BS 476: Part 22: 1987*

1

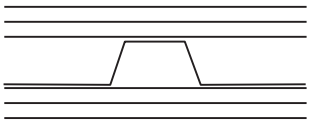

Two layers of board each side of Gypframe Security Sheet. Linings as in table.

Detail	Partition thickness mm	Board type	Lining thickness mm	Maximum partition height[1] mm	Sound insulation R_w dB	Duty rating	Approx. weight kg/m²	System reference
150 minutes fire resistance BS								
1	70	Glasroc F MULTIBOARD	2 x 10	3700[2]	40	Severe	50	G100001

[1] The maximum height quoted is based on a limiting deflection of L/240 at 200 Pa.
[2] Maximum recommended height is 3000mm based on using single sheets of Gypframe Security Sheet with no horizontal overlap. Heights of 3700mm are achievable. Contact the British Gypsum Drywall Academy for further guidance.

NB The fire resistance and sound insulation performances are for imperforate partitions, walls and ceilings incorporating boards with all joints taped and filled, or skimmed according to British Gypsum's recommendations. The quoted performances are achieved only if British Gypsum components are used throughout, and the Company's fixing recommendations are strictly observed. Any variation in the specifications should be checked with British Gypsum.

Performance

Security
The excellent mechanical properties of Glasroc F MULTIBOARD, combined with the stiffness and resilience of Gypframe Security Sheet, make GypWall SECURE a formidable barrier to entry. It has a high resistance to 'determined attack' using hand tools, and good resistance to attack using power tools.

Ad-hoc tests have been carried out at British Gypsum's Building Test Centre. A 'determined attack' by a team of four using hand tools did not achieve through penetration for approximately 10 minutes.

Where even greater resistance to attack is required, 0.7mm flat galvanised steel sheet (by others) should be fixed to the risk side of the security sheet prior to boarding.

Design

Planning - key factors
Service runs can be accommodated within the profile of the security sheet.

Head and base fixing
Gypframe GA4 Steel Angles are fixed to the structure at 300mm centres. Contact the British Gypsum Drywall Academy for further guidance.

Services
Penetrations
Penetrations of attack resistant constructions for services need careful consideration to ensure that the performance of the element is not downgraded.

Electrical
Whilst services can be installed, these should be kept to a minimum. The installation of services should be carried out in accordance with *BS 7671*. Services are accommodated vertically within the profile of the sheeting. Service penetrations, horizontal service runs and socket outlets should always be avoided, where practical, and switch and socket boxes can be surface mounted without affecting the attack resistance of the wall.
▶ Refer to **section 3.5 – Service installations**.

Fixtures
Lightweight fixtures can be made directly into Glasroc F MULTIBOARD. Medium weight fixtures can be made through the lining into the 'high points' of the security sheet core.

Board finishing
▶ Refer to **section 13 – Finishing systems and decorative effects**.

▶ Please refer to **section 3 - Basic principles of system design** for general guidance

BlastWall

High performance blast refuge wall system

120 mins

BlastWall offers resistance to explosive devices, such as car bombs, and can be specified in areas such as post rooms and blast refuge areas. The system has been tested and is approved by Government departments. Specifications are determined on an individual basis following consultation with British Gypsum and specialist blast design consultants as to the performance requirements. For detailed information on the **BlastWall** system, please contact the British Gypsum Drywall Academy.

Key facts

- Lightweight alternative to traditional constructions
- Highly resistant to explosions
- Shatter-resistant Glasroc F MULTIBOARD linings reduce the risk of injury from flying shards
- Satisfies *BS 5234* requirements up to and including Severe Duty[1]
- Home Office approved
- Up to 120 minutes fire resistance

[1] Refer to **section 3.4.2 - Principles of robust design**.

Applications

A range of applications, including cash desks, data storage rooms and public circulation areas.

Sector

- ✓ **Office / commercial**
- ✓ **Education**
- ✓ **Custodial**
- ✓ **Retail**
- ✓ **Healthcare**
- ✓ **Sport and leisure**
- ✓ **Industrial**

FireWall

High performance fire-resistant wall system

This section includes updated information, added since it was first published in July 2009. Please see the WHITE BOOK update document for details.
Last updated 05/07/2010

Comet, Farnborough, Hampshire

FireWall

46 – 59 R_w dB

180 – 240 mins

FireWall is a non-loadbearing wall providing up to 240 minutes fire resistance. Used in retail environments and industrial storage areas to provide sub-division, and other specific conditions of use as determined by insurance companies.

Gypframe 'C' Stud

or

Gypframe 'I' Stud

Key facts

- Satisfies insurance company requirements for enhanced fire performance
- Satisfies *BS 5234* requirements up to and including Severe Duty[1]
- Minimal wall thickness with optimal fire resistance
- Up to 240 minutes fire resistance to EN standards

[1] Refer to **section 3.4.2 - Principles of robust design**.

Applications

A range of applications, including mezzanines, plant room, data storage rooms and warehousing.

Sector

✓ **Retail** ✓ **Industrial** ✓ **Commercial**

System components

Gypframe metal products

70 S 50 'C' Stud — **Length** 2400, 2700, 3000mm 3300, 3600, 4200mm

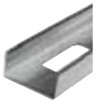

146 S 50 'C' Stud — **Length** 3000, 3600, 4200mm 3300, 4200mm

92 S 10 'C' Stud — **Length** 3600, 4200mm

92 I 90 'I' Stud — **Length** 3600, 5000, 6000mm

Standard Floor & Ceiling Channel
72 C 50
148 C 50
Deep Flange Floor & Ceiling Channel
146 DC 60
72 DC 60
Extra Deep Flange Floor & Ceiling Channel
94 EDC 70
All channels are available in 3600mm only.

Fixing Channels — **Length**
99 FC 50 — 2400mm
150 FC 90 — 1197mm

GFS1 Fixing Strap — **Length** 2400mm

GA2 Steel Angle — **Length** 3200mm
Used at deflection head.

Board products

Gyproc FireLine
Thickness 15mm
Width 1200mm

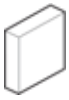

Glasroc F FIRECASE
Thickness 15mm
Width 1200mm

Glasroc F MULTIBOARD
Thickness 6mm
Width 1200mm

Fixing and finishing products

Gyproc Wafer Head Jack-Point Screws
For Gypframe metal-to-metal fixing 0.8mm thick or greater ('I' studs 0.6mm thick and greater).

Gyproc Drywall Screws
For fixing boards to Gypframe metal framing less than 0.8mm thick ('I' studs less than 0.6mm thick).

or

Gyproc Jack-Point Screws
For fixing boards to Gypframe metal framing 0.8mm thick or greater ('I' studs 0.6mm thick and greater).

Glasroc F FIRECASE Screws
Fixing 6mm Glasroc F MULTIBOARD to Glasroc F FIRECASE.

Gyproc Sealant
Sealing airpaths for optimum sound insulation.

Gyproc jointing materials
For seamless jointing.

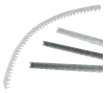

Gyproc edge and angle beads
Protecting and enhancing board edges and corners.

Gyproc Control Joint
To accommodate structural movement.

Gyproc FireStrip
For fire-stopping deflection heads.

Thistle Board Finish or Thistle Multi-Finish
To provide a plaster skim finish.

or

Thistle Durafinish
To provide improved resistance to accidental damage.

Insulation products

Stone mineral wool (by others)
To achieve fire performance.

Installation overview

Gypframe Floor & Ceiling Channel is suitably fixed at the head and base. Gypframe 'C' Studs or Gypframe 'I' Studs are fitted vertically within the channel sections to form the framework. Gypframe 'C' Studs are fixed at abutments. Additional framing is installed as required to support heavy fixtures.

Boards are screw-fixed to framing members to form the lining, except 6mm Glasroc F MULTIBOARD, which is screw-fixed to Glasroc F FIRECASE linings. Horizontal board joints should be backed with Gypframe GFS1 Fixing Strap. Stone mineral wool is fitted into the stud cavity (ensuring joints are half staggered) and suitably secured prior to boarding the second side.

Services

Electrical and other services are normally installed after one side is boarded. Horizontal runs are routed through cut-outs in the studs.

For full installation details, refer to the British Gypsum **SITE** BOOK, available to download from www.british-gypsum.com

For full installation details, refer to the British Gypsum **SITE BOOK**, available to download from www.british-gypsum.com

Performance (▶ Refer to **section 3 - Basic principles of system design**)

EN

Table 1 – FireWall Gypframe 70mm and 146mm 'C' Studs - three layer board linings
Solutions to satisfy the requirements of *BS EN 1364-1: 1999*

1

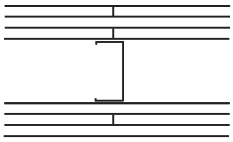

Three layers of board each side of 70 S 50 Gypframe 'C' Studs at 600mm centres. Linings as in table.

2

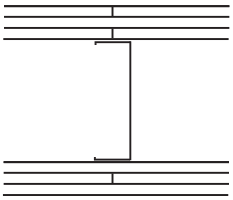

Three layers of board each side of 146 S 50 Gypframe 'C' Studs at 600mm centres. Linings as in table.

Detail	Partition thickness mm	Board type	Lining thickness mm	Maximum partition height[1] mm	Sound insulation R_w dB	Duty rating	Approx. weight kg/m²	System reference
180 minutes fire resistance EN								
1	165	FireLine	3 x 15	4000	46	Severe	73	A206252
2	240	FireLine	3 x 15	4000	50	Severe	73	A206256

[1] The maximum wall heights quoted are limited by the fire state field of application or by limiting deflection of L/240 at 200 Pa, whichever is the more onerous.

NB The fire resistance and sound insulation performances are for imperforate partitions, walls and ceilings incorporating boards with all joints taped and filled, or skimmed according to British Gypsum's recommendations. The quoted performances are achieved only if British Gypsum components are used throughout, and the Company's fixing recommendations are strictly observed. Any variation in the specifications should be checked with British Gypsum.

Table 2 – FireWall Gypframe 70mm and 146mm 'C' Studs and Gypframe 92mm 'I' Studs - two and three layer board linings. Solutions to satisfy the requirements of *BS 476: Part 22: 1987*

1

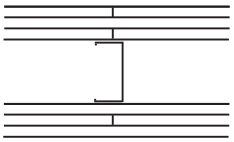

Three layers of board each side of 70 S 50 Gypframe 'C' Studs at 600mm centres. Linings as in table.

2

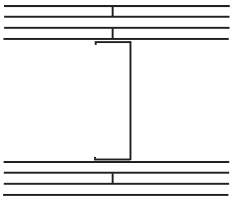

Three layers of board each side of 146 S 50 Gypframe 'C' Studs at 600mm centres. Linings as in table.

3

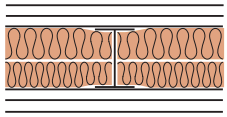

Two layers of board each side of Gypframe 92 I 90 'I' Studs at 600mm centres and located in Gypframe Extra Deep Flange Floor & Ceiling Channel. 90mm thickness of stone mineral wool 100kg/m³ (40mm & 50mm batts) in the cavity. Linings as in table.

4

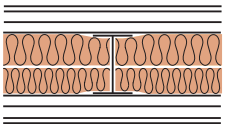

Three layers of board each side of Gypframe 92 I 90 'I' Studs at 600mm centres and located in Gypframe Extra Deep Flange Floor & Ceiling Channel. 90mm thickness of stone mineral wool 100kg/m³ (40mm & 50mm batts) in the cavity. Linings as in table.

Detail	Partition thickness mm	Board type	Lining thickness mm	Maximum partition height[1] mm	Sound insulation R_w dB	Duty rating	Approx. weight kg/m²	System reference
180 minutes fire resistance BS								
3	155	Glasroc F FIRECASE	2 x 15[2]	6900	56	Severe	75	G106I019
1	165	FireLine	3 x 15	4900[3]	46	Severe	73	A206252
2	240	FireLine	3 x 15	7600[3]	50	Severe	73	A206256
240 minutes fire resistance BS								
4	170	Glasroc F FIRECASE + Glasroc F MULTIBOARD	2 x 15 + 6	6900	59	Severe	87	G106I018

[1] Maximum wall heights are based on L/240 at 200 Pa.
[2] Actual test result gave 240 mins integrity : 222 mins insulation.
[3] For heights between 4200mm and 7600mm, Gypframe Deep Flange Floor & Ceiling Channel should be used at base and at head (subject to deflection criteria).

NB The fire resistance and sound insulation performances are for imperforate partitions, walls and ceilings incorporating boards with all joints taped and filled, or skimmed according to British Gypsum's recommendations. The quoted performances are achieved only if British Gypsum components are used throughout, and the Company's fixing recommendations are strictly observed. Any variation in the specifications should be checked with British Gypsum.

Design

Planning - key factors
The position of services should be pre-determined and their installation planned into the frame erection stage.

Cavity fire barriers
12.5mm Gyproc plasterboard, screw-fixed into the web of perimeter channels or vertical studs, will provide a satisfactory closure to flame or smoke. Alternatively 15mm Gyproc FireLine or Glasroc F FIRECASE may be used.
▶ Refer to **section 10 – Cavity fire barriers.**

Services
Penetrations
Penetrations of fire-resistant or sound-insulating constructions for services need careful consideration to ensure that the performance of the element is not downgraded and also that the services themselves do not act as the mechanism of fire spread or sound transmission.
▶ Refer to **section 3.5 – Service installations.**

Electrical
The installation of electrical services should be carried out in accordance with *BS 7671*. The cut-outs in the studs can be used for routing electrical and other small services (see **GypWall CLASSIC Construction details – 1**). Switch boxes and socket outlets can be supported from Gypframe 99 FC 50 or 150 FC 90 Fixing Channels fixed horizontally between studs, or a high performance socket box detail where higher acoustic performance is required.

Fixing floor and ceiling channels
Gypframe Floor & Ceiling Channels must be securely fixed with a row of fixings at 600mm maximum centres. For 94mm channels and above, two rows of staggered fixings are required, each row at 600mm centres and each fixing 25mm in from the flange. If the floor is uneven, a 38mm thick timber sole plate equal to the width of the channel should be used.

If the concrete or screeded floor is new, consideration should be given to the installation of a damp-proof membrane between the floor surface and the channel or sole plate.

Deflection heads
Partition head deflection designs may be necessary to accommodate deflections in the supporting floor. Deflection heads may also be required to the underside of roof structures subjected to positive and negative pressures. See **Construction details – 1 - 2**.
▶ Refer to **section 3.2.2 – Principles of building acoustics**.

Openings
FireWall is used to divide space into fire compartments and, as such, openings are generally not required. If openings are to be specified they must be shown by fire test to maintain the fire performance of the wall.

Fixtures
Lightweight fixtures can be made directly to the partitions. Medium weight fixtures can be made to Gypframe 99 FC 50 Fixing Channel. Heavyweight fixtures (to *BS 5234*), such as wash basins and wall cupboards, can be fixed using Gypframe 150 FC 90 Fixing Channel.
▶ Refer to **section 3.5.2 – Service penetrations and fixing into drywall systems**.

Board finishing
▶ Refer to **section 13 – Finishing systems and decorative effects.**

For more information refer to the British Gypsum **SITE BOOK**, available to download from www.british-gypsum.com

▶ Please refer to **section 3 - Basic principles of system design** for general guidance

Construction details

1 Deflection head for 15mm downward movement and 180 minutes fire resistance

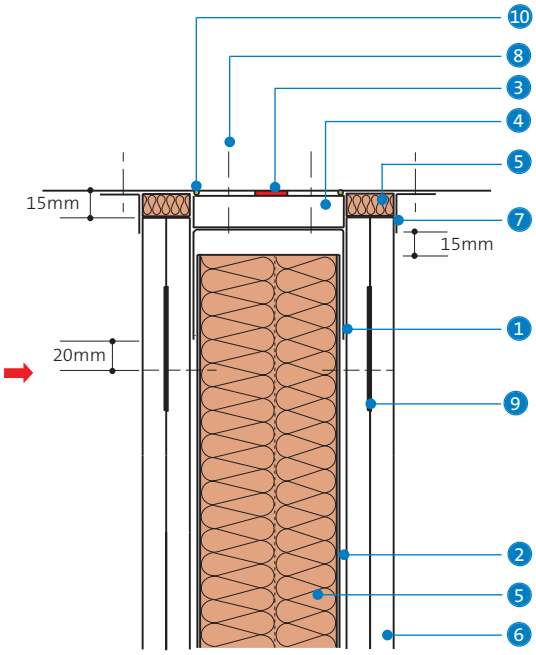

2 Deflection head for 15mm downward movement and 240 minutes fire resistance

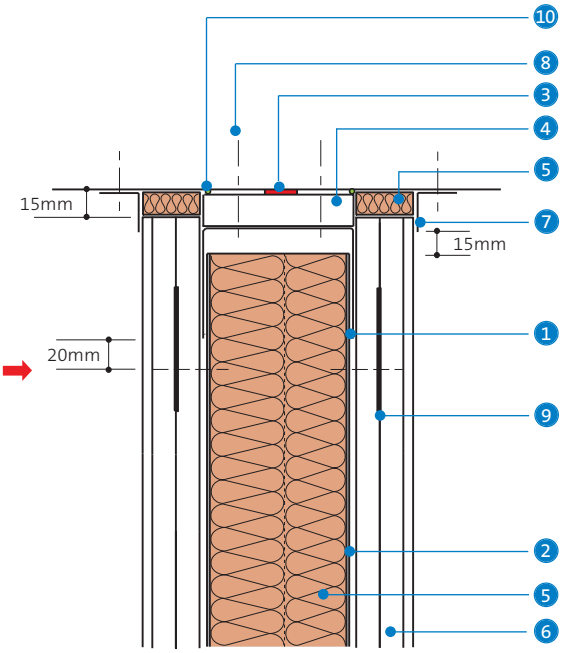

1. Gypframe Extra Deep Flange Floor & Ceiling Channel
2. Gypframe 'I' Stud
3. Gyproc FireStrip (continuous line)
4. 20mm Glasroc F FIRECASE forming fire-stop
5. Stone mineral wool (by others)
6. British Gypsum specialist boards
7. Gypframe GA2 Steel Angle
8. Staggered rows of fixings through fire-stop
9. Gypframe GFS1 Fixing Strap
10. Gyproc Sealant

NB No fixings should be made through the boards into the flanges of the head channel. The arrow (➡) denotes the position of the uppermost board fixing which should be made into Gypframe GFS1 Fixing Strap. Continuous Gyproc FireStrip must be installed as shown to maintain fire performance.

Non-loadbearing timber stud

Traditional stud partitions

This section includes updated information, added since it was first published in July 2009. Please see the WHITE BOOK update document for details.
Last updated 21/01/2011

Bryant Homes,
Blenheim Grange, Watton
Images courtesy of Taylor Wimpey

Non-loadbearing timber stud

34 – 63 R_w dB

30 – 120 mins

Timber stud plasterboard partitions are used in residential applications, both in new housing and refurbishment, and in commercial and off-site applications.

Timber studs

Key facts

- Non-loadbearing constructions
- Twin frame and single frame constructions incorporating Gypframe RB1 Resilient Bar to meet sound resisting separating wall requirements
- Can achieve high levels of fire resistance
- Achieves Building Regulations Approved Document E sound resisting internal partition requirements

Applications

Residential and non-housing applications, e.g. basic space division.

Sector

- ✓ Office / commercial
- ✓ Housing
- ✓ Retail
- ✓ Apartment buildings
- ✓ Education

System components

Framing

Timber studs (by others)
Typically 63mm to 100mm depth; 38mm to 50mm width.

Gypframe RB1 Resilient Bar — **Length** 3000mm
For improved acoustic performance.

Timber battens (by others)
As required.

Board products

Gyproc WallBoard[1 2]

Thickness	12.5, 15mm
Width	900, 1200mm

Gyproc SoundBloc[1]

Thickness	12.5, 15mm
Width	1200mm

Gyproc Plank

Thickness	19mm
Width	600mm

Gyproc FireLine[1 2]

Thickness	12.5, 15mm
Width	900, 1200mm

Glasroc F MULTIBOARD

Thickness	10, 12.5mm
Width	1200mm

[1] Moisture resistant boards are specified in intermittent wet use areas, e.g. shower cubicles.
[2] Also available in DUPLEX grades where vapour control is required.

Fixing and finishing products

Gyproc Drywall Timber Screws
For fixing boards to normal softwoods, super-dried timber and engineered 'I' beams.

Gyproc Drywall Screws
For fixing boards to Gypframe metal framing less than 0.8mm thick ('I' studs less than 0.6mm thick).

Gyproc Sealant
Sealing air paths for optimum sound insulation.

Gyproc jointing materials
For seamless jointing.

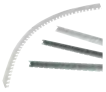

Gyproc edge and angle beads
Protecting and enhancing board edges and corners.

Thistle Board Finish or Thistle Multi-Finish
To provide a plaster skim finish.

or

Thistle Durafinish
To provide improved resistance to accidental damage.

Insulation products

Isover APR 1200
25mm, 50mm, 65mm and 100mm, for improved acoustic performance.

Isover Spacesaver Ready-Cut
100mm, for improved acoustic performance.

Always use genuine branded British Gypsum components to qualify for **SpecSure**® lifetime warranty

Installation overview

Timber framing is fixed to the perimeter, abutments, and to frame any openings, using suitable fixings. Timber studs are fixed at specified centres. Where Gypframe RB1 Resilient Bars are required, these are fixed horizontally to the timber studs to one or both sides as specified. Additional framing is installed as required to support heavy fixtures. Boards are screw-fixed to all supports to form the lining. Horizontal board joints are backed with timber noggings or Gypframe RB1 Resilient Bars as required.

Openings

Door openings are formed by fixing full height studs to each side, together with a timber head piece. Door facings are then fixed to the timber ground.

Services

Services are normally installed after one side is boarded. Timber noggings are fixed to support recessed switch boxes / socket outlets.

For full installation details, refer to the British Gypsum **SITE BOOK**, available to download from www.british-gypsum.com

Table 1 - Gyproc plasterboard or Glasroc F specialist board fixed to timber supports

Board type	Thickness mm	Width mm	Recommended stud centres mm
Gyproc WallBoard	12.5	900	450
		1200	600
	15	900	450
		1200	600
Gyproc FireLine	12.5	900	450
		1200	600
	15	900	450
		1200	600
Gyproc Plank	19	600	600
Gyproc SoundBloc	12.5	1200	600
	15	1200	600
Glasroc F MULTIBOARD	10	1200	600
	12.5	1200	600

Performance (▶ Refer to **section 3 - Basic principles of system design**)

EN

Table 1a – 63mm and 75mm timber stud partitions
Solutions to satisfy the requirements of *BS EN 1364-1: 1999 (Non-loadbearing)*

1

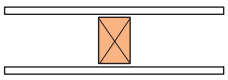

One layer of board each side of timber studs at 600mm centres. Insulation and linings as in table.

2

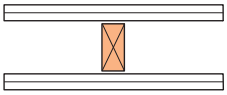

Two layers of board each side of timber studs at 600mm centres. Insulation and linings as in table.

3

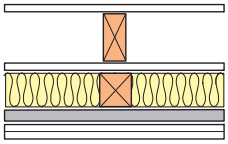

Remedial treatment on one side of existing plasterboard partition (minimum 1 x 12.5mm plasterboard each side of 75mm x 38mm studs at 600mm centres) using 50mm x 50mm timber battens at 600mm centres, with 50mm Isover APR 1200 between the studs with Gypframe RB1 Resilient Bar at 600mm centres (fixed horizontally). Linings as in table.

Detail	Partition thickness mm	Board type	Lining thickness mm	Stud size mm[1]	Sound insulation R_w Without insulation dB	Sound insulation R_w With insulation dB	System reference
30 minutes fire resistance EN							
1	88	SoundBloc	1 x 12.5	63 x 38	-	40[2]	A026009
1	93	SoundBloc	1 x 15	63 x 38	40	-	A026008
1	93	WallBoard	1 x 15	63 x 38	-	40[2]	A026010
1	105	WallBoard	1 x 15	75 x 38	37	40[2]	A026002/6
1	105	SoundBloc	1 x 15	75 x 38	40	43[2]	A026014/17
60 minutes fire resistance EN							
2	115	Glasroc F MULTIBOARD	2 x 10	75 x 38	38	-	G106004
2	125	FireLine	2 x 12.5	75 x 38	38	42[2]	A026028/9
3	196	SoundBloc	2 x 15	75 x 38	-	52	A05402
90 minutes fire resistance EN							
2	125	Glasroc F MULTIBOARD	2 x 12.5	75 x 38	37	-	G106005
2	135	FireLine	2 x 15	75 x 38	38	42[2]	A026030/1

[1] Stud sizes quoted are minimum.
[2] 25mm Isover APR 1200 insulation.

NB The fire resistance and sound insulation performances are for imperforate partitions, walls and ceilings incorporating boards with all joints taped and filled, or skimmed according to British Gypsum's recommendations. The quoted performances are achieved only if British Gypsum components are used throughout, and the Company's fixing recommendations are strictly observed. Any variation in the specifications should be checked with British Gypsum.

BS Table 1b – 63mm, 75mm and 100mm timber stud partitions
Solutions to satisfy the requirements of *BS 476: Part 22: 1987 (Non-loadbearing)*

1

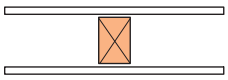

One layer of board each side of timber studs at 600mm centres. Insulation and linings as in table.

2

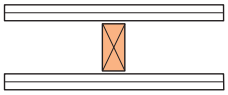

Two layers of board each side of timber studs at 600mm centres. Insulation and linings as in table.

3

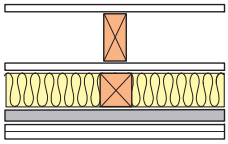

Remedial treatment on one side of existing plasterboard partition (minimum 1 x 12.5mm plasterboard each side of 75mm x 38mm studs at 600mm centres) using 50mm x 50mm timber battens at 600mm centres, with 50mm Isover APR 1200 between the studs with Gypframe RB1 Resilient Bar at 600mm centres (fixed horizontally). Linings as in table.

4

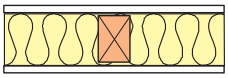

One layer of board each side of timber studs at 600mm centres and 65mm Isover APR 1200 in the cavity. Linings as in table.

Detail	Partition thickness mm	Board type	Lining thickness mm	Stud size mm[1]	Sound insulation R_w Without insulation dB	Sound insulation R_w With insulation dB	System reference
30 minutes fire resistance BS							
1	88	SoundBloc	1 x 12.5	63 x 38	-	40[2]	A026009
4	88	WallBoard	1 x 12.5	63 x 38	-	41	A026012
1	93	SoundBloc	1 x 15	63 x 38	40	-	A026008
1	93	WallBoard	1 x 15	63 x 38	-	40[2]	A026010
1	100	WallBoard	1 x 12.5	75 x 38	35	36[2]	A026001/005
1	100	SoundBloc	1 x 12.5	75 x 38	38	40[2]	A026011/016
1	105	SoundBloc	1 x 15	75 x 38	40	43[2]	A026014/017
60 minutes fire resistance BS							
1	100	Glasroc F MULTIBOARD	1 x 12.5	75 x 50	34	-	G106003
2	115	Glasroc F MULTIBOARD	2 x 10	75 x 50	38	-	G106004
2	125	WallBoard	2 x 12.5	75 x 38	38	42[2]	A026003/007
2	125	SoundBloc	2 x 12.5	75 x 38	44	46[2]	A026015/018
1	130	FireLine	1 x 15	100 x 50	38	-	A026023
3	196	SoundBloc	2 x 15	75 x 38	-	52	A05402
90 minutes fire resistance BS							
2	125	Glasroc F MULTIBOARD	2 x 12.5	75 x 38	37	-	G106005
120 minutes fire resistance BS							
2	160	FireLine	2 x 15	100 x 50	41	-	A026025

[1] Stud sizes quoted are minimum. [2] 25mm Isover APR 1200 insulation.

NB The fire resistance and sound insulation performances are for imperforate partitions, walls and ceilings incorporating boards with all joints taped and filled, or skimmed according to British Gypsum's recommendations. The quoted performances are achieved only if British Gypsum components are used throughout, and the Company's fixing recommendations are strictly observed. Any variation in the specifications should be checked with British Gypsum.

Performance (▶ Refer to **section 3 - Basic principles of system design**)

EN

Table 2a - 75mm and 89mm timber stud walls
Solutions to satisfy the requirements of *BS EN 1364-1: 1999 (Non-loadbearing)*

1

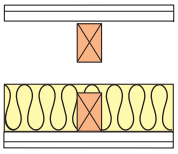

Two separate timber frames spaced 50mm apart, consisting of 89mm x 38mm timber studs at 600mm centres with noggings. Two layers of board each side. 100mm Isover APR 1200 between the studs on one side. Linings as in table.

2

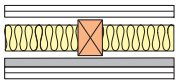

Two layers of board each side of 75mm x 38mm timber studs at 600mm centres with Gypframe RB1 Resilient Bars fixed horizontally to one side at 600mm centres. 50mm Isover APR 1200 in the cavity. Linings as in table.

3

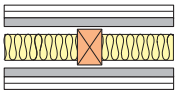

Two layers of board each side of 75mm x 38mm timber studs at 600mm centres with Gypframe RB1 Resilient Bars fixed horizontally to both sides at 600mm centres. 50mm Isover APR 1200 in the cavity. Linings as in table.

Detail	Partition thickness mm	Board type	Lining thickness mm	Stud size mm	Sound insulation R_w (R_w + Ctr) dB	System reference
60 minutes fire resistance EN						
2	141	SoundBloc	2 x 12.5	75 x 38	56 (48)	A046005
3	157	SoundBloc	2 x 12.5	75 x 38	59 (51)	A046006
1	293	Plank + FireLine	19 + 12.5	89 x 38	63 (51)	A036003

NB The fire resistance and sound insulation performances are for imperforate partitions, walls and ceilings incorporating boards with all joints taped and filled, or skimmed according to British Gypsum's recommendations. The quoted performances are achieved only if British Gypsum components are used throughout, and the Company's fixing recommendations are strictly observed. Any variation in the specifications should be checked with British Gypsum.

BS Table 2b - 75mm and 89mm timber stud walls
Solutions to satisfy the requirements of *BS 476: Part 22: 1987 (Non-loadbearing)*

1

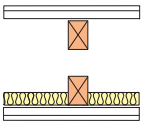

Two separate timber frames spaced 50mm apart, consisting of 89mm x 38mm timber studs at 600mm centres with noggings. Two layers of board each side. 25mm Isover APR 1200 between the studs on one side. Linings as in table.

2

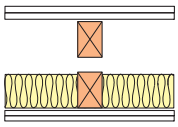

Two separate timber frames spaced 50mm apart, consisting of 89mm x 38mm timber studs at 600mm centres with noggings. Two layers of board each side. 100mm Isover Spacesaver Ready-Cut between the studs on one side. Linings as in table.

3

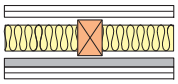

Two layers of board each side of 75mm x 38mm timber studs at 600mm centres with Gypframe RB1 Resilient Bars fixed horizontally to one side at 600mm centres. 50mm Isover APR 1200 in the cavity. Linings as in table.

4

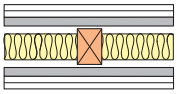

Two layers of board each side of 75mm x 38mm timber studs at 600mm centres with Gypframe RB1 Resilient Bars fixed horizontally to both sides at 600mm centres. 50mm Isover APR 1200 in the cavity. Linings as in table.

Detail	Partition thickness mm	Board type	Lining thickness mm	Stud size mm	Sound insulation R_w (R_w + Ctr) dB	System reference
60 minutes fire resistance BS						
3	141	SoundBloc	2 x 12.5	75 x 38	56 (48)	A046005
4	157	SoundBloc	2 x 12.5	75 x 38	59 (51)	A046006
2	290	SoundBloc	2 x 15	89 x 38	61 (53)	A036002
1	293	Plank + WallBoard	19 + 12.5	89 x 38	63 (51)	A046022
90 minutes fire resistance BS						
3	151	SoundBloc	2 x 15	75 x 38	58 (51)	A046007
4	167	SoundBloc	2 x 15	75 x 38	60 (52)	A046008
4	170	Plank + SoundBloc	19 + 12.5	75 x 38	60 (52)	A046024

NB The fire resistance and sound insulation performances are for imperforate partitions, walls and ceilings incorporating boards with all joints taped and filled, or skimmed according to British Gypsum's recommendations. The quoted performances are achieved only if British Gypsum components are used throughout, and the Company's fixing recommendations are strictly observed. Any variation in the specifications should be checked with British Gypsum.

Design

Planning - key factors
The position of services and heavy fixtures should be pre-determined and their installation planned into the frame erection stage. If a plastered finish is specified, the thickness of the door or glazing frame must allow for the thickness of the plaster finish.

To minimise the risk of cracking at the plasterboard joints, seasoned timber with a moisture content not exceeding that recommended in *BS 5268* should be used. The contractor should ensure that timber supports are accurately spaced, aligned, and levelled.

Cavity fire barriers
Cavity barriers may be required to satisfy the requirements of Building Regulations.
▶ Refer to **section 10 – Cavity fire barriers.**

Services
Penetrations
Penetrations of fire resistant constructions for services need careful consideration to ensure that the integrity of the element is not impaired and also that the services themselves do not act as the mechanism of fire spread.
▶ Refer to **section 3.5 – Service installations.**

Electrical
Electrical and other small service runs can be routed within the timber stud cavity. The installation of electrical services should be carried out in accordance with *BS 7671*. Switch boxes and socket outlets can be supported from timber stud noggings.

Strength and robustness
Timber should be aligned and level, and should meet the requirements of *BS 5268*. The dimensions and assembly of timber supports should be sufficient to allow positive fixing of plasterboard without bounce or undue deflection because of the nailing, screwing, or other applied force. When the above fixing conditions cannot be met, a timber batten should be securely fixed to the side of the timber support to increase the bearing surface.

Where boards are fixed at maximum centres in adverse conditions, the standard of lining can be affected. Adverse conditions can generally be described as conditions where high humidity occurs, principally in the cold, damp, autumn / winter period. They also refer to buildings under construction over this period, where both the structure and wet applications, such as plastering and screeding, are subject to slow drying conditions.

Partition junctions
At a 'T' junction, a ladder frame should be constructed between studs to provide fixing points for the abutting partition, and to support the lining (see **Construction details – 2**). The horizontal members of the frame should be at 600mm maximum centres.

Fixing to super-dried timber
It has been established by test that Gyproc Drywall Timber Screws are the preferred solution for fixing to standard softwood or super-dried timber (approximately 12% moisture content).

Nail popping
Loosening of nails in timber can occur through timber shrinkage, or as a result of fixing boards to misaligned or twisted framing. To reduce the risks, boards should be fixed tight to framing members, using Gyproc Drywall Timber Screws.

Fixtures
Lightweight fixtures can be made directly to the partitions. Medium weight, or heavyweight fixtures such as cisterns, radiators or wash basins, can be made directly into the timber supports. Additional studs or timber noggings should be installed as appropriate.

Board finishing
▶ Refer to **section 13 – Finishing systems and decorative effects.**

For more information refer to the British Gypsum **SITE** BOOK, available to download from www.british-gypsum.com

▶ Please refer to **section 3 - Basic principles of system design** for general guidance

Construction details

1 Head and base

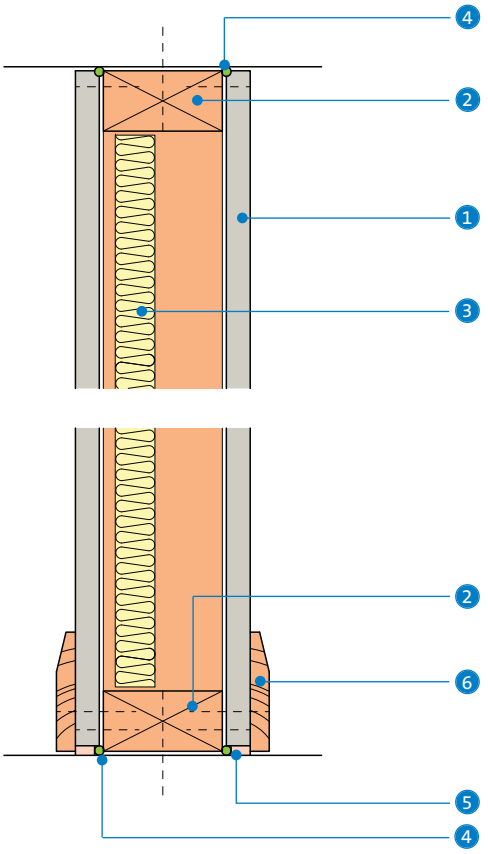

2 'T' junction between studs

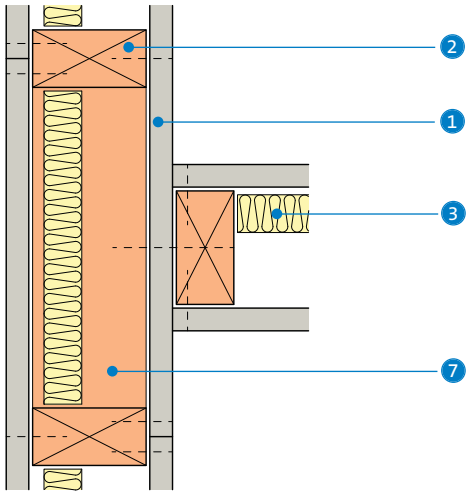

3 'T' junction at stud

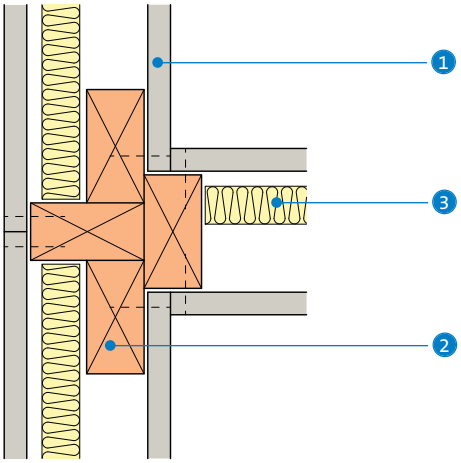

4 Internal / external corner

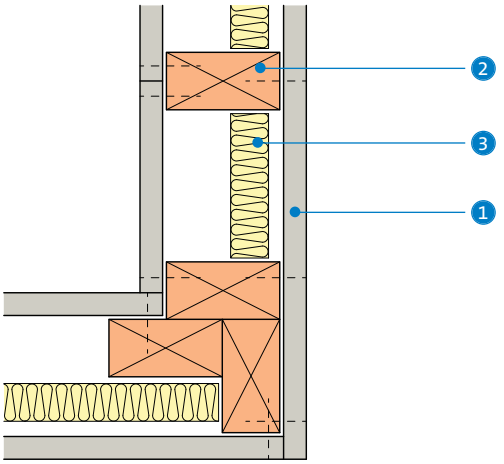

5 Door jamb

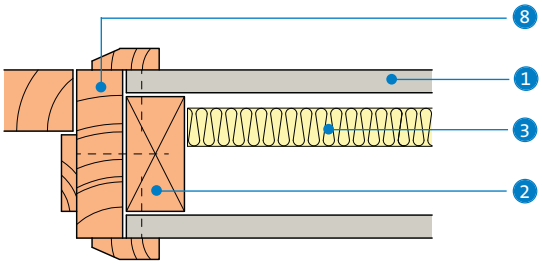

1. Gyproc plasterboard
2. Timber framing
3. Isover insulation
4. Gyproc Sealant
5. Bulk fill with Gyproc jointing materials (where gap exceeds 5mm)
6. Skirting
7. Timber noggings at 600mm centres
8. Timber door frame and architrave

DriLyner BASIC, TL, SI, MF, RF

Drywall masonry lining systems

This section includes updated information, added since it was first published in July 2009. Please see the WHITE BOOK update document for details.
Last updated 11/10/2010

Countryside Properties,
Lock 38, Stoke-on-Trent

DriLyner BASIC, TL, SI, MF, RF

60 R_w dB | 0.33 – 0.17 W/m²K

DriLyner lining systems provide simple and effective techniques for drylining brick, block, and concrete walls in both new-build and refurbishment work.

DriLyner BASIC, DriLyner TL, and DriLyner SI systems use gypsum adhesive dabs to bond boards directly to the wall. The DriLyner BASIC system uses Gyproc WallBoard, the DriLyner TL system uses Gyproc ThermaLine laminates, and the DriLyner SI system uses Gyproc TriLine - a sound insulating laminate.

The DriLyner MF system facilitates the fixing of Gyproc plasterboards or ThermaLine laminates to Gypframe channels, which are adhesive bonded to the wall. Gyproc ThermaLine laminates are fixed to the channels using a combination of Gyproc Sealant and Gyproc Drywall Screws to minimise any risk of thermal bridging.

The DriLyner RF system provides a method of fixing boards directly to solid walls, including directly to plastered walls in a refurbishment situation, using blobs of Gyproc Sealant.

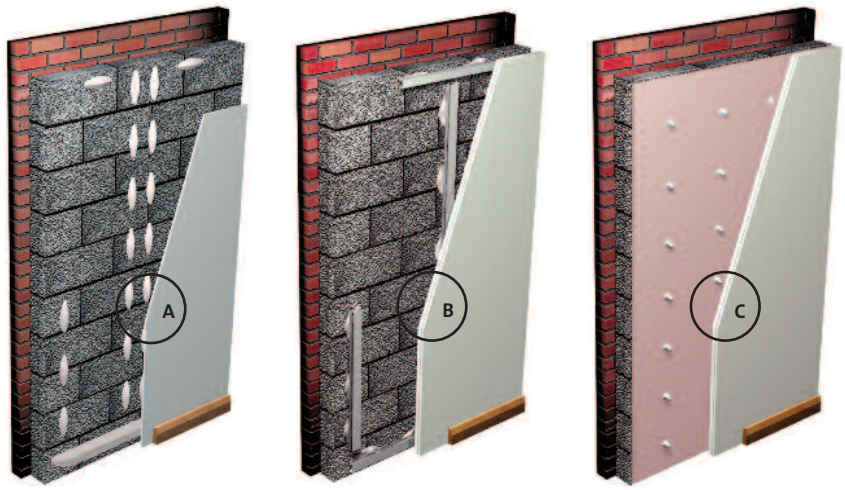

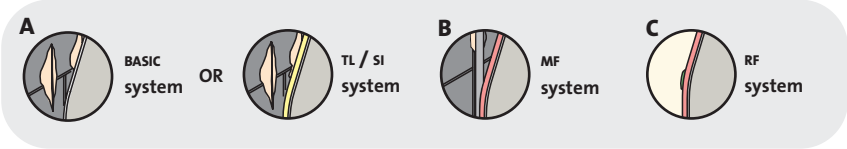

Key facts

- Choice of fixing systems
- Achieve U-values down to 0.17 W/m²K
- Gyproc TriLine is used to upgrade sound insulation
- Linings provide early room comfort conditions
- Services incorporated with minimum chasing

Applications

Lining or re-lining masonry walls.

Sector

- ✓ Office / commercial
- ✓ Education
- ✓ Housing
- ✓ Retail
- ✓ Healthcare
- ✓ Apartment buildings
- ✓ Sport and leisure
- ✓ Industrial

System components

Gypframe metal products

MF10 Channel — **Length** 2100, 2800mm

G106 Skirting Plate
For fixing Gyproc TriLine and 28mm Gyproc ThermaLine PLATINUM.

Board products

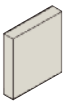

Gyproc WallBoard[1]
Used in **DriLyner BASIC, MF**[2] and **RF** systems.
Thickness 9.5, 12.5mm
Width 900, 1200mm

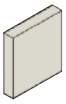

Gyproc WallBoard TEN
Used in **DriLyner BASIC, MF** and **RF** systems.
Thickness 12.5mm
Width 1200mm

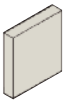

Gyproc WallBoard DUPLEX
Used in **DriLyner MF** systems.
Thickness 9.5, 12.5mm
Width 1200mm

Gyproc DuraLine[1]
Used in **DriLyner BASIC, MF** and **RF** systems.
Thickness 15mm
Width 1200mm

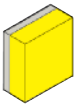

Gyproc TriLine
Used in **DriLyner SI** and **RF** systems.
Thickness 52mm
Width 900mm

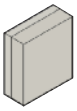

Gyproc ThermaLine laminates
Used in **DriLyner TL, MF** and **RF** systems.
Thickness 22 - 90mm
Width 1200mm

[1] Moisture resistant boards are specified in intermittent wet use areas, e.g. shower cubicles.
[2] 12.5mm board thickness only.

Fixing and finishing products

Gyproc Drywall Screws
For fixing Gyproc boards to Gypframe MF10 Channel, available in lengths from 22mm to 75mm.

Gyproc Sealant
For fixing Gyproc boards in the **DriLyner RF** system, fixing Gyproc ThermaLine laminates to Gypframe MF10 Channel in the **DriLyner MF** system, sealing small air paths, and for fixing skirting boards.

Gyproc Nailable Plugs
For providing a secondary mechanical fixing of Gyproc ThermaLine laminates in the **DriLyner TL, SI** and **RF** systems.

Gyproc Soundcoat Plus
Gypsum based parge coat for sealing masonry walls prior to drylining to optimise sound and thermal performance.

Gyproc Dri-Wall Adhesive
For dab fixing in the **DriLyner BASIC, TL, SI** and **MF** systems.

Gyproc jointing materials
For seamless jointing.

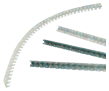

Gyproc edge and angle beads
Protecting and enhancing board edges and corners.

Thistle Board Finish or Thistle Multi-Finish
To provide a plaster skim finish.

or

Thistle Durafinish
To provide improved resistance to accidental damage.

Insulation products

Isover CWS
50mm, for improved thermal performance.

Isover RD35
For Robust Detail constructions.

Installation overview - DriLyner BASIC, SI and TL systems

A continuous 6mm coat of Gyproc Soundcoat Plus is applied to the entire surface of the external and separating walls (if required) and allowed to set. To improve acoustic performance this should not be trowelled smooth. Setting out lines are marked on the floor and ceiling allowing for high spots, a minimum 10mm drylining cavity and the thickness of board.

The wall is marked with lines at 900mm or 1200mm centres to indicate board positioning.

A continuous fillet / ribbon of Gyproc Dri-Wall Adhesive is applied to the wall perimeter and around all services and openings as board fixing proceeds. This is particularly important if the lining is designed to act as an air barrier to achieve building airtightness.

Drylining is commenced from a window / door reveal or internal angle and adhesive dabs applied in three or four rows (as appropriate) to receive the first board, together with intermediate dabs at ceiling level and a continuous band of adhesive at skirting level.

The boards are positioned with the bottom edge resting on plasterboard packing strips. Boards are 'tapped' into position, lifted tight to the ceiling using a footlifter and supported until the adhesive sets. Further boards are installed, lightly butted together, to complete the lining.

When installing Gyproc ThermaLine laminates in the DriLyner TL or SI system, two Gyproc Nailable Plugs are inserted per board (after the dabs have set) as secondary mechanical fixings, normally located within the tapered edges so that they are concealed when the system is finished, at mid-height (**DriLyner TL**) or 200mm down from the top of the board (**DriLyner SI**). The fitting of Gypframe Skirting Plates over the bottom edge of boards during installation provides a ground for subsequent skirting fixing. In the **DriLyner SI** system the insulating backing of Gyproc TriLine is adhesive primed just prior to installation (see **Construction details – 19**).

For full installation details, refer to the British Gypsum **SITE BOOK**, available to download from www.british-gypsum.com

Installation overview - DriLyner RF system

The wall is marked with lines at 900mm or 1200mm centres to indicate board positioning. Drylining is commenced from a window / door reveal or internal angle. Gyproc Sealant is gun-applied to the wall, or the back of the board, in blobs at 300mm centres.

Boards are positioned against the sealant, with the bottom edge resting on plasterboard packing strips. Boards are 'tapped' into position, lifted tight to the ceiling using a footlifter and supported until the sealant hardens. Further boards are installed, lightly butted together, to complete the lining.

Two Gyproc Nailable Plugs are inserted per board (after the sealant has hardened) as secondary mechanical fixings, normally located within the tapered edges so that they are concealed when the system is finished, at 200mm down from the top of the board for Gyproc TriLine, and at mid-height for Gyproc ThermaLine laminates.

When installing Gyproc TriLine, Gyproc Sealant is applied to the board rather than the wall, in two applications. The first application of sealant blobs is flattened using a taping knife to prime the surface. Further blobs are applied over each primed area.

For full installation details, refer to the British Gypsum **SITE BOOK**, available to download from www.british-gypsum.com

For full installation details, refer to the British Gypsum **SITE BOOK**, available to download from www.british-gypsum.com

Installation overview - DriLyner MF system

Setting out lines are marked on the floor and ceiling allowing for high spots, a 20mm drylining cavity and the thickness of board. The wall is marked with lines at 600mm centres to indicate Gypframe MF10 Channel positioning. A continuous fillet / ribbon of Gyproc Dri-Wall Adhesive is applied to the wall perimeter and around all services and openings as board fixing proceeds. This is particularly important if the lining is designed to act as an air barrier to achieve building airtightness.

Dabs of Gyproc Dri-Wall Adhesive are applied progressively to the wall to each vertical line. Gypframe MF10 Channels are located onto the adhesive dabs and 'tapped' into position.

Further vertical Gypframe MF10 Channels are adhesive fixed to complete the run of wall. Horizontal channels are similarly located at the head and base. Board fixing can proceed once the adhesive has fully set.

Boards are positioned with the back against the Gypframe MF10 Channels and bottom edge resting on plasterboard packing strips and lifted tight to the ceiling using a footlifter.

Addtional packing strips are inserted at the base to wedge the board in place. Boards are screw-fixed to all Gypframe MF10 Channel supports.

At angles and reveals, Gypframe MF10 Channels are installed close to the corner to provide support.

Door and window openings are framed with Gypframe MF10 Channels. At window openings, the channel at the head forms a ground for fixing curtain track. Where a partition abuts, an additional Gypframe MF10 Channel is installed to provide a fixing ground.

When installing Gyproc ThermaLine laminates, a continuous bead of Gyproc Sealant is gun-applied to the Gypframe MF10 Channels just prior to positioning the boards. The boards are then screw-fixed using three Gyproc Drywall Screws into each tapered edge, one each side at mid-height, one 600mm above and one 600mm below.

For full installation details, refer to the British Gypsum **SITE** BOOK, available to download from www.british-gypsum.com

For full installation details, refer to the British Gypsum **SITE BOOK**, available to download from www.british-gypsum.com

Performance

Fire protection
Plasterboard is designated a 'material of limited combustibility' within Building Regulations Approved Document B. The exposed plasterboard surfaces of Gyproc ThermaLine laminates, and the mineral wool in Gyproc TriLine achieve a Class 0 rating as a result of their performance when tested to *BS 476: Part 6: 1989* and *BS 476: Part 7: 1997*.

DriLyner TL, SI, RF and MF systems incorporate secondary mechanical fixings, which, when Gyproc ThermaLine laminates and Gyproc TriLine are used, delay board fall in the event of a fire.

Sound insulation
Airtightness is essential for optimum sound insulation. Whilst most junctions will be sealed by standard installation and finishing processes, gaps at the base of the wall and other small air paths can be sealed using Gyproc Sealant.

Gyproc TriLine is capable of upgrading the sound insulation performance of walls. See Table 3.

Thermal properties
Gyproc linings are relatively lightweight and have a low thermal capacity. In conditions of intermittent heating, they will warm up quickly, providing comfortable conditions for the occupants, and will help reduce the risk of surface condensation.

The U-values for typical new and existing wall constructions with Gyproc plasterboard linings are given in Tables 2 and 4. Thermal resistance values for the drylining cavities are given in Table 1 below.

Table 1 – Thermal resistance of drylining cavities

System	R-value m^2K/W
DriLyner RF system	0.03
DriLyner TL and SI systems	0.11
DriLyner MF system	0.17

Condensation and water vapour resistance
Gyproc WallBoard DUPLEX and some Gyproc ThermaLine laminates offer significant resistance to water vapour transmission. The application of two coats of Gyproc Drywall Sealer to Gyproc WallBoard, Gyproc Moisture Resistant or Gyproc ThermaLine BASIC after installation and jointing provides a water vapour resistance of at least 15MNs/g.

The use of Gyproc WallBoard DUPLEX or Gyproc ThermaLine laminates with integral vapour control, or supplemented with a vapour control layer treatment such as two coats of Gyproc Drywall Sealer, significantly reduces the risk of interstitial condensation.

It is important, particularly in new buildings, that external walls are properly dried out before a vapour control layer is provided, otherwise moisture may be trapped, impairing the performance of the construction.

Performance (▶ Refer to **section 3 - Basic principles of system design**)

Table 2 – DriLyner RF refurbishment - upgrading thermal insulation of external walls

1

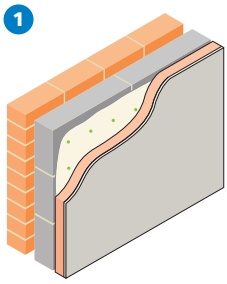

103mm brick skin with 50mm clear cavity. Block and lining options as in table.

2

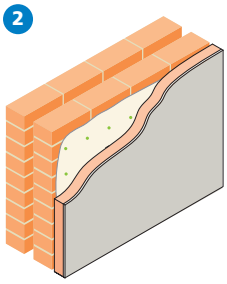

103mm brick skin, 50mm clear cavity and 103mm brick inner leaf. Lining options as in table.

3 [1]

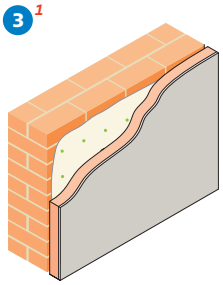

215mm solid brick skin. Lining options as in table.

4 [1]

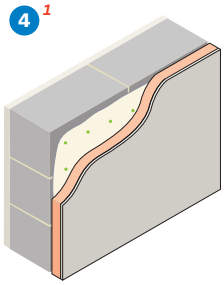

16mm render both sides on 190mm medium density blocks. Linings as in table.

Detail	Board type	Lining thickness mm	Overall wall thickness mm	DriLyner system	Drylining cavity depth mm	U-value W/m²K
Aircrete block (λ = 0.11 W/mK)						
1	ThermaLine SUPER	50	319	RF	3	0.31
1	ThermaLine SUPER	60	329	RF	3	0.26
1	ThermaLine SUPER	90	359	RF	3	0.19
Medium density block (λ = 0.47 W/mK)						
1	ThermaLine SUPER	60	329	RF	3	0.30
1	ThermaLine SUPER	90	359	RF	3	0.21
4	ThermaLine SUPER	60	285	RF	3	0.31
4	ThermaLine SUPER	70	295	RF	3	0.27
4	ThermaLine SUPER	90	315	RF	3	0.21
Brick (λ = 0.56 W/mK)						
2	ThermaLine SUPER	60	332	RF	3	0.31
2	ThermaLine SUPER	70	342	RF	3	0.27
2	ThermaLine SUPER	90	362	RF	3	0.21
Brick (λ = 0.75 W/mK)						
3	ThermaLine SUPER	60	298	RF	3	0.33
3	ThermaLine SUPER	70	308	RF	3	0.28
3	ThermaLine SUPER	90	328	RF	3	0.22

[1] Subject to severity of exposure.

Table 3 – DriLyner SI refurbishment - upgrading sound insulation

1

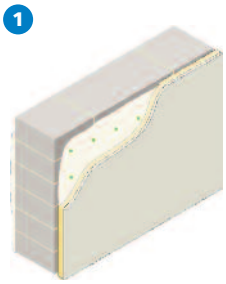

102mm solid dense block or brick, plastered on one or both sides. Linings as in table.

Detail	Block density kg/m³	Board type	Lining thickness mm	Applied to	DriLyner system	Laboratory sound insulation Airborne R_w (R_w + Ctr) dB	Improvement over basic wall R_w (R_w + Ctr) dB	System reference
1	2000	TriLine	52	One side	RF / SI	60 (53)	+13 (+9)	B160018

NB The **DriLyner RF** system is used where existing plaster is retained. The **DriLyner SI** system is used where it is removed.

NB The sound insulation performances are for imperforate walls incorporating boards with all joints taped and filled, or skimmed according to British Gypsum's recommendations. The quoted performances are achieved only if British Gypsum components are used throughout, and the Company's fixing recommendations are strictly observed. Any variation in the specifications should be checked with British Gypsum.

Performance (▶ Refer to **section 3 - Basic principles of system design**)

Table 4 – DriLyner TL new-build - meeting thermal insulation requirements for external cavity walls

1

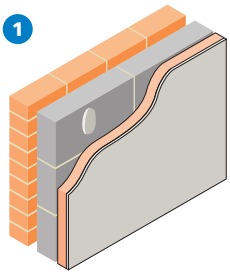

103mm brick skin, minimum 50mm clear cavity and 100mm block inner leaf. Linings as in table.

2

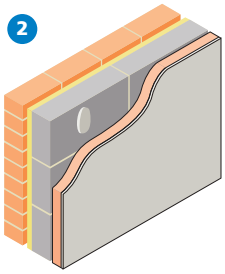

103mm brick skin, 50mm Isover CWS and 100mm block inner leaf. Linings as in table.

3

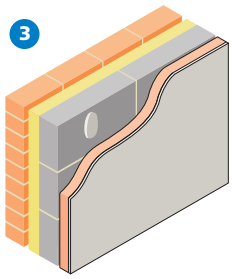

103mm brick skin, 100mm Isover Hi-Cav 32 and 100mm block inner leaf. Linings as in table.

Detail	Board type	Lining thickness mm	Overall wall thickness mm	DriLyner system	Drylining cavity depth mm	U-value W/m²K
Aircrete block (λ = 0.11 W/mK)						
1	ThermaLine SUPER	50	313	TL	10	0.30
1	ThermaLine SUPER	60	323	TL	10	0.26
1	ThermaLine SUPER	90	353	TL	10	0.19
2	ThermaLine PLUS	27	290	TL	10	0.32
2	ThermaLine SUPER	30	293	TL	10	0.29
3	ThermaLine BASIC	22	335	TL	10	0.22
3	ThermaLine BASIC	30	343	TL	10	0.21
3	ThermaLine PLUS	27	340	TL	10	0.20
Medium density block (λ = 0.47 W/mK)						
1	ThermaLine SUPER	60	323	TL	10	0.30
1	ThermaLine SUPER	70	333	TL	10	0.26
1	ThermaLine SUPER	90	353	TL	10	0.21
2	ThermaLine PLUS	35	298	TL	10	0.35
2	ThermaLine SUPER	50	313	TL	10	0.25
2	ThermaLine SUPER	90	353	TL	10	0.16
Dense block (λ = 1.13 W/mK)						
2	ThermaLine PLUS	40	303	TL	10	0.34
2	ThermaLine SUPER	50	313	TL	10	0.26
2	ThermaLine SUPER	90	353	TL	10	0.17

Table 5 – DriLyner TL new-build - meeting thermal insulation requirements for external cavity walls

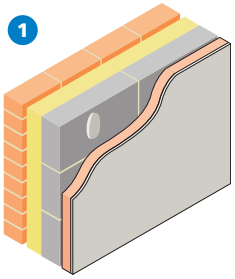

103mm brick skin, 125mm Isover CWS
and 100mm block inner leaf.
Linings as in table.

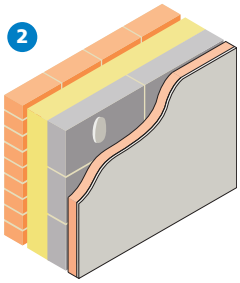

103mm brick skin, 150mm Isover CWS[1]
and 100mm block inner leaf.
Linings as in table.

Detail	Board type	Lining thickness mm	Overall wall thickness mm	DriLyner system	Drylining cavity depth mm	U-value W/m²K
Aircrete block (λ = 0.11 W/mK)						
1	ThermaLine BASIC	22	360	TL	10	0.22
1	ThermaLine BASIC	30	368	TL	10	0.21
1	ThermaLine PLUS	35	373	TL	10	0.20
2	Gyproc WallBoard	12.5	376	BASIC	10	0.21
Medium density block (λ = 0.47 W/mK)						
2	Gyproc WallBoard	12.5	376	BASIC	10	0.23

[1] 150mm Isover CWS is a special order product. Alternatively, 2 x 75mm Isover CWS can be used.

▶ Please refer to **section 3 - Basic principles of system design** for general guidance

Design

Planning - key factors
The position of services should be pre-determined and their installation planned into the construction stage.
▶ Refer to **section 3.5 – Service installations**.

In general, an allowance of the total board thickness plus 3mm for **DriLyner RF**, 10mm for **DriLyner BASIC**, **TL**, and **SI**, and 20mm for **DriLyner MF**, should be made from the high point of the background to the face of the lining. This will determine the lining dimension required at door and window reveals and soffits. Ceilings should be installed prior to the application of **DriLyner** linings, ensuring that the boards are cut close to the wall.

Interior partitions abutting the inner leaf of the external wall should also be installed prior to installation of **DriLyner** lining where acoustic performance is a key consideration. This helps to reduce flanking transmission.

If Gyproc WallBoard DUPLEX is to be specified, it should only be fixed in the **DriLyner MF** system. When using the **DriLyner MF** system, care must be taken with solid in-situ walls, solid concrete panel walls, heavy block, or no-fines walls, as thermal bridging may occur, which could result in screw-head pattern staining.

If Gyproc TriLine is to be specified, it should only be fixed in the **DriLyner SI** or **RF** systems.

The **DriLyner RF** system should only be used on reasonably flat, dry, sound, plastered wall surfaces, or fair-faced concrete, brick, or block walls.

Cavity barriers
Building Regulations may require the provision of vertical cavity barriers to long runs of lining. A suitable cavity barrier can be formed using a continuous vertical line of dabs running down the centre of a board.

Thermal performance
Uncontrolled air movement through the drylining cavity can result in excessive heat loss from the building. The quoted U-values for **DriLyner** systems are based on a sealed cavity between the lining and the background. This is achieved in practice if the abutting elements and the background are well fitted, and junctions are sealed.

When the lining is designed to act as an air barrier to achieve building airtightness, the perimeter of the cavity is to be sealed by applying a continuous fillet / ribbon of Gyproc Dri-Wall Adhesive or Gyproc Sealant to the perimeter of the external wall and around any services and openings.

The designer should also specify a method of restricting air movement around the perimeter of suspended timber floors, such as the provision of a flexible seal between the floor and walls. Integrity of construction and integrity of lining are unlikely to be issues with existing walls, therefore the foregoing design precautions are unlikely to be required with the **DriLyner RF** system.

Sound insulation
Gyproc Soundcoat Plus is designed to improve the acoustic performance of masonry party walls by minimising acoustic leakage through cracks, unfilled joints or block porosity. It is approved for use in Robust Details E-WM-3, E-WM-4, E-WM-5, E-WM-6, E-WM-10, E-WM-11, E-WM-12, E-WM-13 and E-WM-16. When applying Gyproc Soundcoat Plus, it is recommended that a 6mm coat is applied across the entire surface area of the separating wall covering all cracks and voids. The product should not be trowelled smooth.

Alternatively, Isover RD35 insulation can be used in conjunction with **DriLyner BASIC** and appropriate Gyproc board to give improved acoustic performance. It is integral to Robust Details E-WM-8, E-WM-14 and E-WM-15.

Window and door reveals
When using Gyproc WallBoard or Gyproc ThermaLine laminates in the **DriLyner MF** system, reveals may be lined with narrow widths of board directly bonded to the background with Gyproc Dri-Wall Adhesive. Where it is necessary to continue the **DriLyner MF** system into the reveal, i.e. when fixing DUPLEX grade board, channels should be fixed as near as possible to both the external angle and the frame. If the dimensions of the frame prevent the same thickness of thermal laminate being used in the reveal, a thinner laminate could be used to minimise any risks of thermal bridging, even though the same U-value may not be maintained.

Backgrounds
DriLyner linings should only be installed to backgrounds that are reasonably dry and protected from the weather.

In the **DriLyner BASIC**, **DriLyner TL**, **DriLyner SI**, and **DriLyner MF** systems, linings can be fixed directly to low, medium, and high suction masonry, as well as pre-cast and in-situ normal ballast aggregate concrete, using Gyproc Dri-Wall Adhesive. Concrete backgrounds must be free of shutter-release agents and will need to be brushed down to remove dust, and slightly dampened with a wet brush prior to applying adhesive dabs. Concrete which is exceptionally dense or smooth, or made with limestone, brick or granite aggregates, should be pre-treated with ThistleBond-it, which should be applied in bands to correspond with the adhesive dab centres and in accordance with British Gypsum's application instructions.

In the **DriLyner RF** system, linings can be fixed directly to plastered wall surfaces, or reasonably flat, solid backgrounds of brick, block, or fair-faced concrete, using Gyproc Sealant.

Variations in moisture content of the background will lead to differences in its suction characteristics. When these are extreme, either with slow drying conditions, or dry, hot conditions, care must be taken. If wet, allow the backgrounds to dry out. In dry, hot conditions, care should be taken to avoid rapid loss of moisture prior to the set of the adhesive.

When a considerable quantity of moisture may be present in the building, due to the condition of the building fabric or to prolonged damp weather, consideration should be given to the use of dehumidifiers or appropriate heating and ventilation to speed up the drying-out process. Installation of the lining before the building is adequately dry can have an adverse effect on both the building and the lining itself.

▶ Please refer to **section 3 - Basic principles of system design** for general guidance

When installing **DriLyner** linings to composite wall structures consisting of concrete columns with infills of brick or block, dabs of adhesive should not be located on the columns but only on the brick or block infill areas. This will reduce the likelihood of cracking of the finished lining as a result of differential movement from the background.

Adhesive dabs

Dabs should be applied in a regular pattern in accordance with *BS 8212* and *BS 8000: Part 8* to give a minimum area of contact between board and background of 20%.

Services

The cavity between the linings and the background can be used to incorporate services. This minimises the depth of chasing required in the background. Pipes and conduits should be fixed in position before lining work commences. Gas pipes should be installed in accordance with *BS 6891*, which requires pipes be fully encased, e.g. using Gyproc Dri-Wall Adhesive. To maintain an airtight construction the perimeter of any penetration through the lining should be sealed as necessary at the time the services are being installed.

The insulating backing of the laminates should not be chased to accommodate services. PVC covered cables must not come into direct contact with polystyrene insulation. Suitable isolation methods such as conduit or capping should be used. The installation of electrical services should be carried out in accordance with *BS 7671*.

▶ Refer to **section 3.5 – Service installations**.

Fixtures

Lightweight fixtures can be made directly to the lining. For other fixtures, the fixing device used should be long enough to bridge the drylining cavity and give adequate penetration into the solid wall.

▶ Refer to **section 3.5.2 – Service penetrations and fixing into drywall systems**.

Board finishing

▶ Refer to **section 13 – Finishing systems and decorative effects**.

For more information refer to the British Gypsum **SITE** BOOK, available to download from www.british-gypsum.com

Construction details - DriLyner BASIC, TL and SI systems (DriLyner BASIC illustrated)

1 Wall elevation - Gyproc WallBoard 9.5mm and 12.5mm thick, 900mm wide

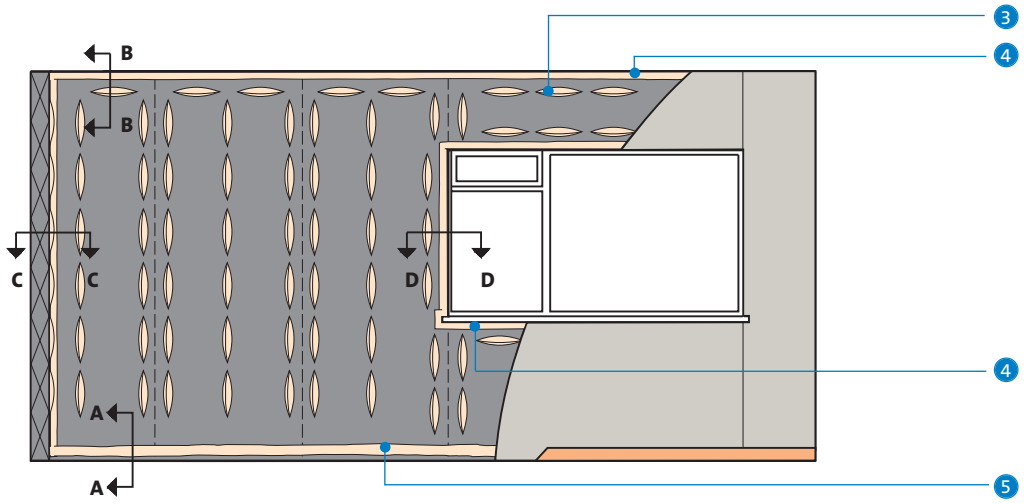

2 Section A - A

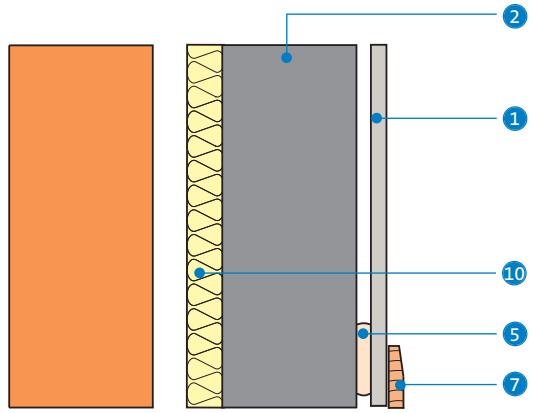

3 Section B - B

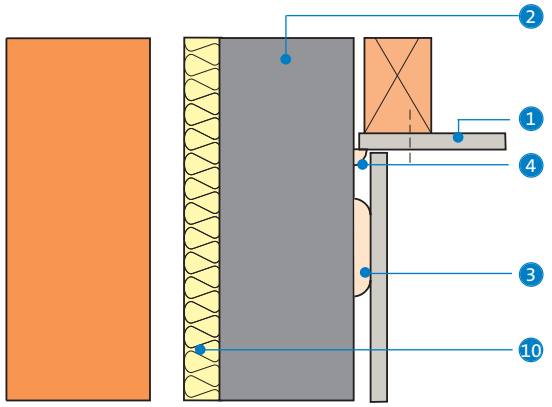

4 Section C - C

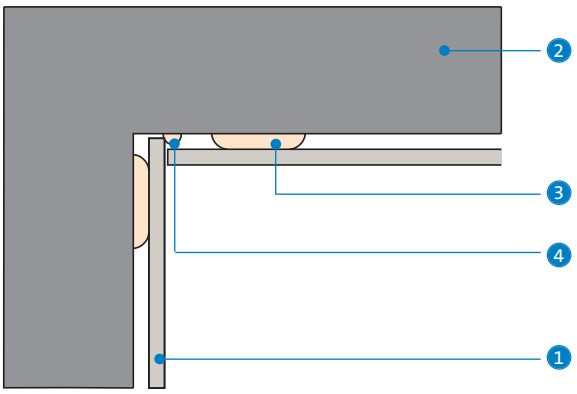

5 Section D - D

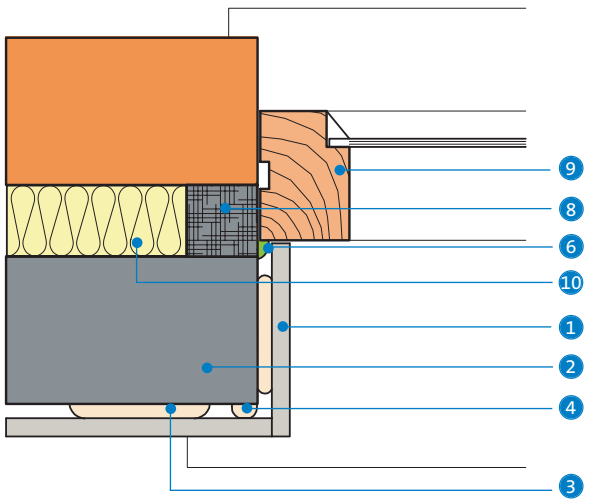

1. Gyproc plasterboard
2. Masonry wall
3. Gyproc Dri-Wall Adhesive dab
4. Gyproc Dri-Wall Adhesive fillet
5. Gyproc Dri-Wall Adhesive continuous ribbon
6. Gyproc Sealant (where required)
7. Skirting
8. Proprietary cavity closer
9. Window unit
10. Isover insulation

NB For building airtightness a continuous ribbon of Gyproc Dri-Wall Adhesive is required around the wall and opening perimeters.

6 Junction with GypWall RAPID dB Plus

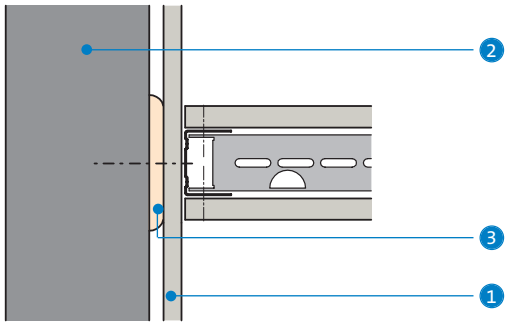

7 Junction with GypWall CLASSIC

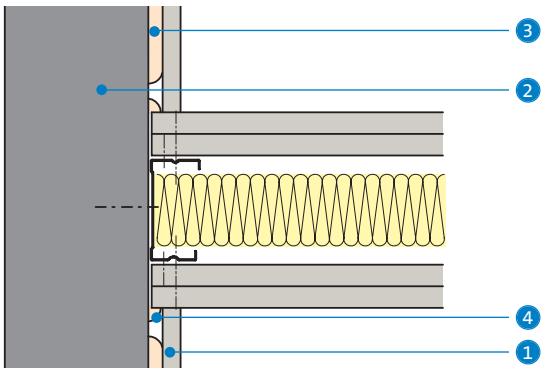

8 Door frame

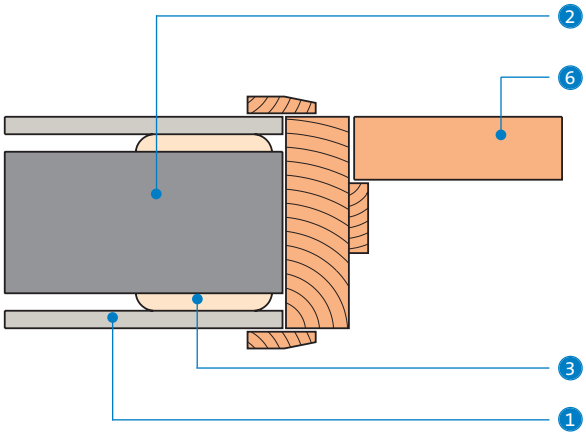

9 Ceiling to roof junction

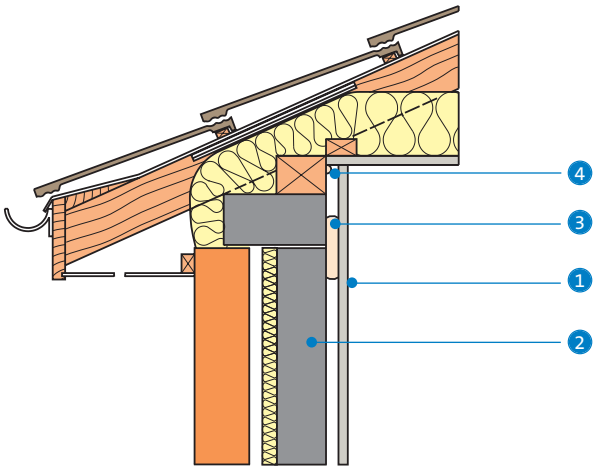

10 DriLyner TL system - window reveal additional detailing

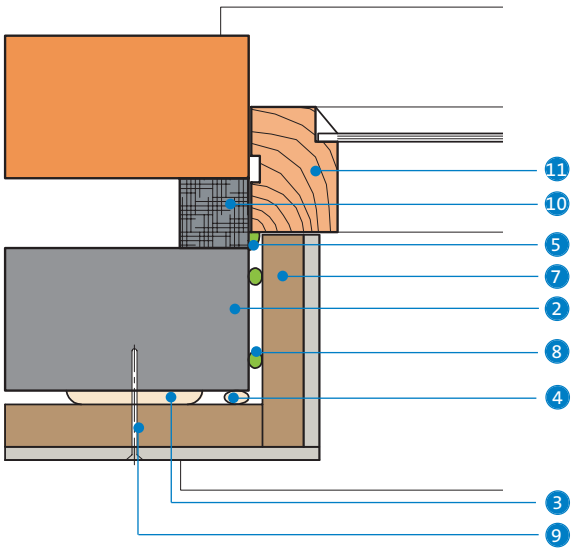

1. Gyproc plasterboard
2. Masonry wall
3. Gyproc Dri-Wall Adhesive dab
4. Gyproc Dri-Wall Adhesive fillet
5. Gyproc Sealant (where required)
6. Door assembly
7. Gyproc ThermaLine laminate
8. Gyproc Sealant fixing reveal board
9. Gyproc Nailable Plug
10. Proprietary cavity closer
11. Window unit

Construction details - DriLyner MF system

11 Wall elevation - Gyproc WallBoard, 12.5mm thick, 1200mm wide

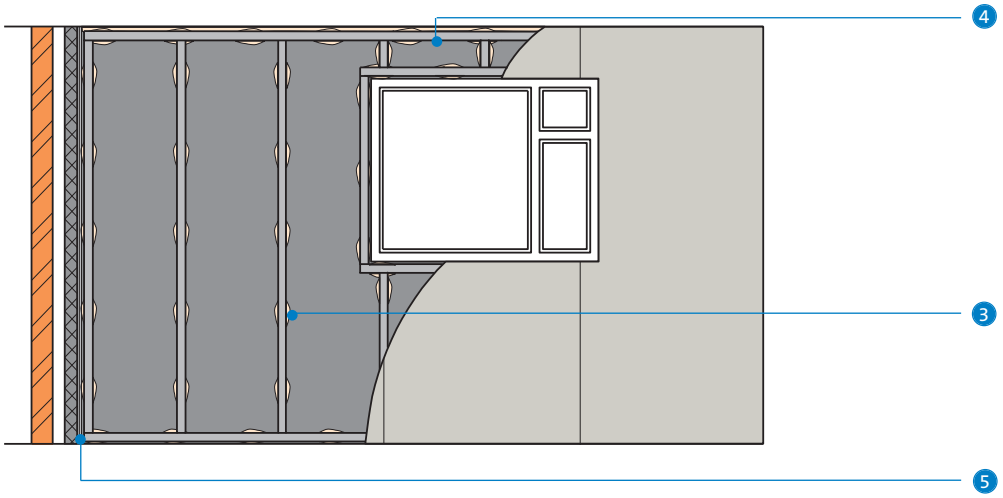

12 Internal angle

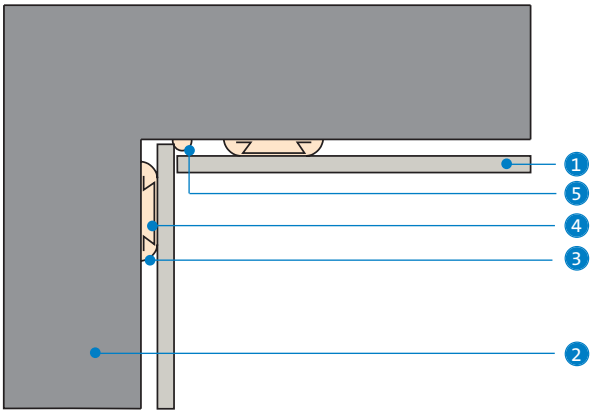

13 External angle

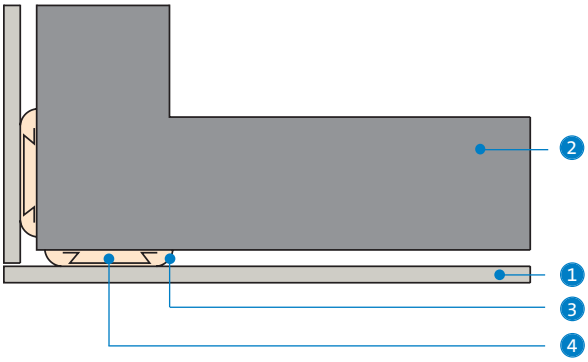

14 Door frame

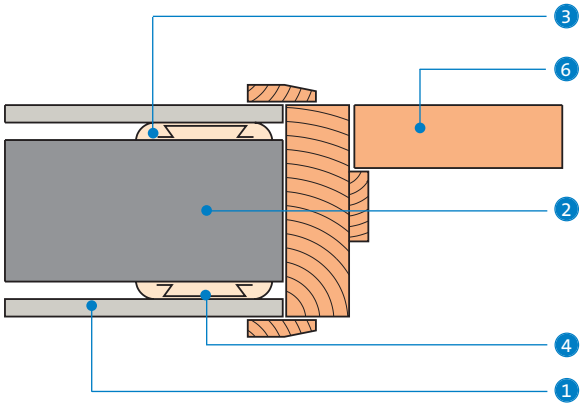

15 Junction with GypWall RAPID dB Plus

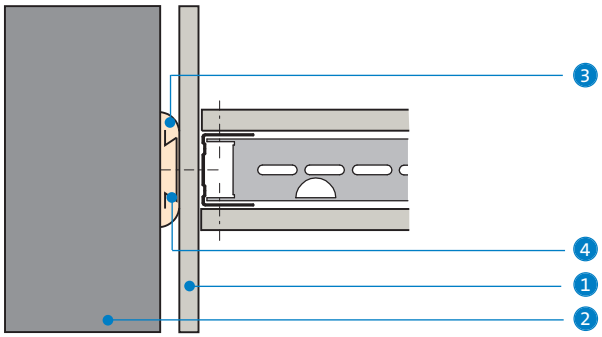

1. Gyproc plasterboard
2. Masonry wall
3. Gyproc Dri-Wall Adhesive dab
4. Gypframe MF10 Channel (fixings into channel omitted for clarity)
5. Gyproc Dri-Wall Adhesive fillet
6. Door assembly

16 Junction with **GypWall CLASSIC**

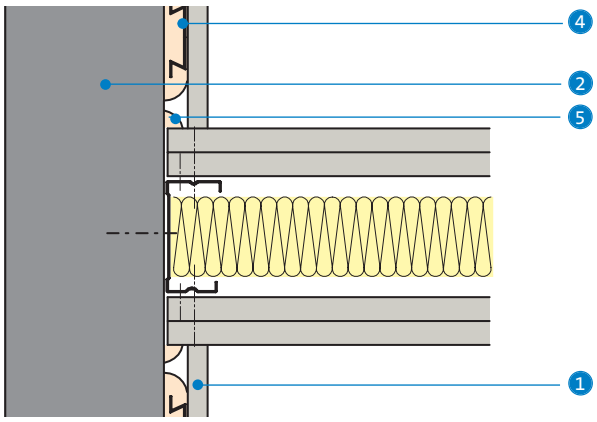

17 Window reveal

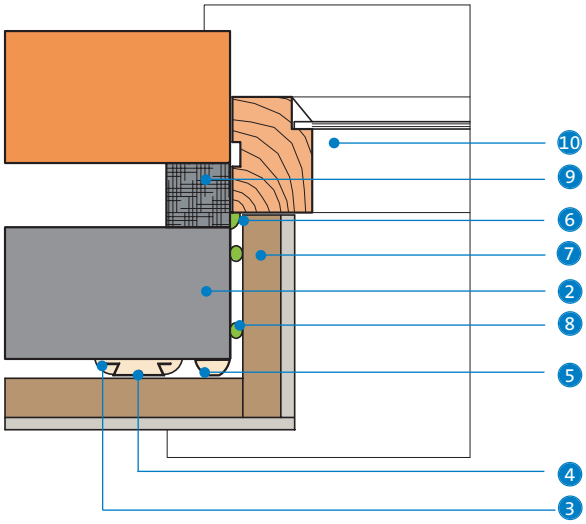

18 Junction with **GypWall CLASSIC**

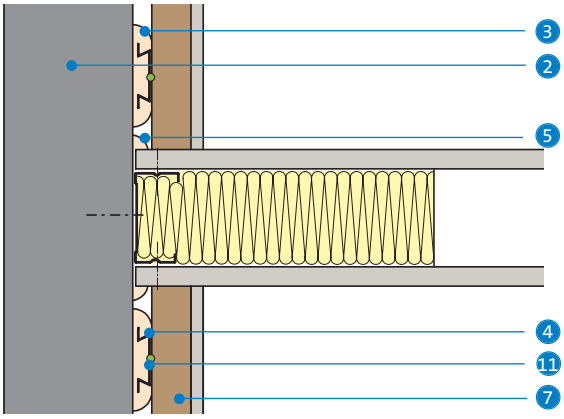

19 Gyproc Dri-Wall Adhesive priming of Gyproc TriLine

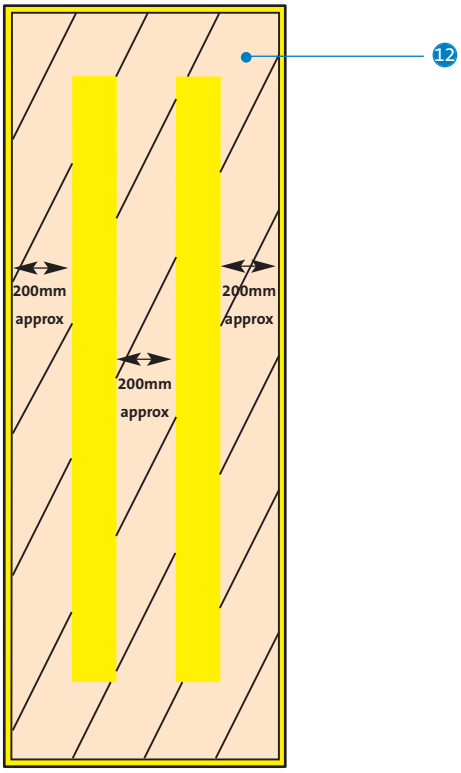

1. Gyproc plasterboard
2. Masonry wall
3. Gyproc Dri-Wall Adhesive dab
4. Gypframe MF10 Channel (fixings into channel omitted for clarity)
5. Gyproc Dri-Wall Adhesive fillet
6. Gyproc Sealant (where required)
7. Gyproc ThermaLine laminate
8. Gyproc Sealant fixing reveal board
9. Proprietary cavity closer (by others)
10. Window unit
11. Gyproc Sealant
12. Gyproc Dri-Wall Adhesive priming

GypLyner UNIVERSAL
Metal framed wall lining system

This section includes updated information, added since it was first published in July 2009. Please see the WHITE BOOK update document for details.
Last updated 05/07/2010

Cadbury offices,
Bournville, Birmingham

GypLyner UNIVERSAL

49 – 66 R_w dB

0.53 – 0.22 W/m²K

GypLyner UNIVERSAL wall lining system is a cost-effective, virtually independent metal frame drylining. It is a general purpose system that is suitable for all internal non-loadbearing applications.

A Gypframe GL1 Lining Channel +

B 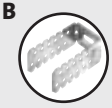 Gypframe GL2 or GL9 Bracket +

C Gypframe GL8 Track

Key facts

- Commonality of ceiling and wall lining components
- General purpose lining
- Minimal connection to the structure
- Overcomes difficulties of background irregularities
- Can satisfy thermal performance and acoustic requirements
- Provides service void of 25mm - 125mm
- Ideal for refurbishing existing walls where:
  - wall surface quality is poor
  - acoustic or thermal upgrades are required
  - a cavity is required to accommodate services, such as water and waste pipes

Applications

Due to the design flexibility of GypLyner UNIVERSAL, this system can be tailored to meet the requirements of a wide range of applications.

Sector

- ✓ Office / commercial
- ✓ Education
- ✓ Housing
- ✓ Retail
- ✓ Healthcare
- ✓ Apartment buildings
- ✓ Sport and leisure
- ✓ Industrial
- ✓ High-rise multi-occupancy

System components

Gypframe metal products

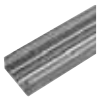

GL1 Lining Channel

Length
2400, 2700mm
3000, 3600mm

GL2 Bracket
For maximum 75mm stand-off from wall.

Length
195mm

GL9 Bracket
For maximum 125mm stand-off from wall.

Length
295mm

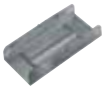

GL3 Channel Connector

GL8 Track

Length
3600mm

99 FC 50 Fixing Channel

Length
2400mm

150 FC 90 Fixing Channel

Length
1197mm

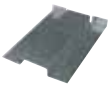

Service Support Plate
For the installation of plywood within a partition cavity.

Length
130mm

GFS1 Fixing Strap

Length
2400mm

GFT1 Fixing 'T'

Length
2400mm

Board products

Gyproc WallBoard[1]
Thickness 12.5, 15mm
Width 900, 1200mm

Gyproc WallBoard DUPLEX
Thickness 12.5, 15mm
Width 900, 1200mm

Gyproc SoundBloc[1]
Thickness 12.5, 15mm
Width 1200mm

Board products (continued)

Gyproc DuraLine[1]
Thickness 15mm
Width 1200mm

Gyproc ThermaLine boards
Thickness 22 - 90mm
Width 1200mm

[1] Moisture resistant boards are specified in intermittent wet use areas, e.g. shower cubicles.

NB DUPLEX grade board is used as an external wall lining to control water vapour transmission.

Fixing and finishing products

Gypframe GL11 GypLyner Anchors
For fixing Gypframe GL2, GL9 or GL12 Brackets to concrete / masonry.

Gyproc Wafer Head Drywall Screws
For metal-to-metal fixing up to 0.79mm thick.

Gyproc Drywall Screws
For fixing boards to Gypframe metal framing and brackets to timber supports.

Gyproc Sealant
Sealing air paths for optimum sound insulation.

Gyproc jointing materials
For seamless jointing.

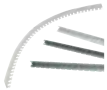

Gyproc edge and angle beads
Protecting and enhancing board edges and corners.

Gyproc Control Joint
To accommodate structural movement.

Thistle Board Finish or Thistle Multi-Finish
To provide a plaster skim finish.

or

Thistle Durafinish
To provide improved resistance to accidental damage.

Insulation products

Isover APR 1200
25mm or 50mm, for improved acoustic performance.

Isover CWS
50mm, for improved thermal and acoustic performance.

Always use genuine branded British Gypsum components to qualify for **SpecSure**® lifetime warranty

Installation overview

The required cavity depth up to a maximum of 125mm is determined, and chalk lines marked to floor and ceiling to indicate positioning of the Gypframe GL8 Track. Gypframe GL8 Track is fixed to perimeters using appropriate fixings. Vertical lines are marked on the wall at appropriate intervals to indicate Gypframe GL2 or GL9 Bracket fixing centres. Horizontal lines are marked at appropriate centres to determine individual bracket positions. Brackets are then fixed into position.

Gypframe GL1 Lining Channels are friction-fitted into the track, extending if required. Bracket legs are bent forward and each leg fixed to the Gypframe GL1 Lining Channel. The protruding bracket legs are bent back to sit clear of the channel face.

At internal angles, a Gypframe GL1 Lining Channel is positioned tight into the corner to provide support for the lining. Boards are fixed to all framing members.

Openings

Gypframe GL1 Lining Channel is positioned either side of the door opening and fixed to the Gypframe GL8 Track at head and base. A section of Gypframe GL8 Track is cut and bent to form the head of the opening. Short lengths of Gypframe GL1 Lining Channel are positioned above the opening to provide additional support and to maintain appropriate support centres. At window openings, Gyproc edge bead is fixed to the perimeter of the window frame to protect and retain the lining. See **Construction details – 5**.

For full installation details, refer to the British Gypsum **SITE** BOOK, available to download from www.british-gypsum.com

For full installation details, refer to the British Gypsum **SITE BOOK**, available to download from www.british-gypsum.com

Performance (▶ Refer to **section 3 - Basic principles of system design**)

Table 1 – GypLyner UNIVERSAL new-build - meeting thermal insulation requirements for external cavity walls

1

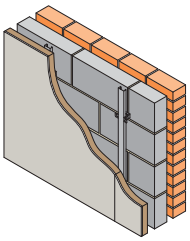

Brick / cavity / block wall comprising 103mm brick skin, 50mm clear cavity, block inner leaf. Linings as in table.

2

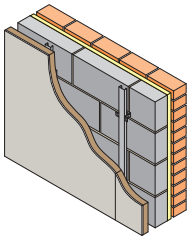

Brick / cavity / block wall comprising 103mm brick skin, 50mm Isover CWS, block inner leaf. Linings as in table.

Detail	Board type	Lining thickness	Minimum overall wall	Minimum GypLyner UNIVERSAL	U-value
Aircrete block (λ = 0.11 W/mK) inner leaf					
1	ThermaLine SUPER	40	318	25	0.35
1	ThermaLine SUPER	60	338	25	0.26
1	ThermaLine SUPER	90	368	25	0.19
2	ThermaLine PLUS	27	305	25	0.31
2	ThermaLine SUPER	30	308	25	0.28
2	ThermaLine PLUS	40	318	25	0.27
Medium density block (λ = 0.47 W/mK) inner leaf					
1	ThermaLine SUPER	60	338	25	0.31
1	ThermaLine SUPER	70	348	25	0.27
1	ThermaLine SUPER	90	368	25	0.22
2	ThermaLine PLUS	35	313	25	0.34

NB Calculations are based on the proportional area and combined methods for determining U-values of structures containing repeated thermal bridges in accordance with *BS EN ISO 6946*.

Table 2 – GypLyner UNIVERSAL refurbishment - upgrading thermal insulation of external walls

1

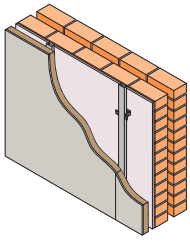

Brick / cavity / brick wall comprising 103mm cavity brick skin. 50mm clear cavity, 103mm inner brick plastered. Linings as in table.

2 [1]

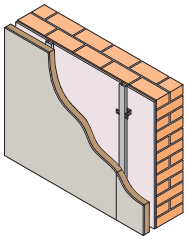

Solid brick wall (215mm) with inner face plastered. Linings as in table.

Detail	Board type	Lining thickness	Minimum overall wall	Minimum GypLyner UNIVERSAL	U-value
Outer brick (λ = 0.77 W/mK), inner brick (λ = 0.56 W/mK), solid brick (λ = 0.75 W/mK)					
1	ThermaLine PLUS	40	334	25	0.53
1	ThermaLine SUPER	60	354	25	0.31
1	ThermaLine SUPER	70	364	25	0.27
2	ThermaLine SUPER	50	303	25	0.41
2	ThermaLine SUPER	70	323	25	0.29

[1] Subject to severity of exposure and weathertightness.
[2] Including 25mm Isover APR 1200 in the **GypLyner UNIVERSAL** cavity / framing.

NB Calculations are based on the proportional area and combined methods for determining U-values of structures containing repeated thermal bridges in accordance with *BS EN ISO 6946*.

Performance (▶ Refer to **section 3 - Basic principles of system design**)

Table 3 – GypLyner UNIVERSAL refurbishment - upgrading sound insulation of solid internal walls

1

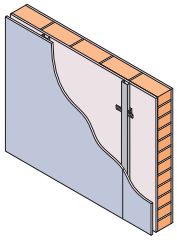

Solid brick wall (103mm) with 13mm plaster each side and Gypframe GL1 Lining Channel framework fixed to one side to give 35mm cavity. Lining as in table.

2

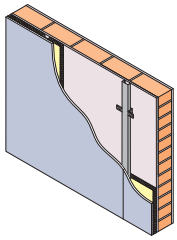

Solid brick wall (103mm) with 13mm plaster each side and Gypframe GL1 Lining Channel framework fixed to **one** side to give 35mm cavity. Cavity filled with 25mm Isover APR 1200. Lining as in table.

3

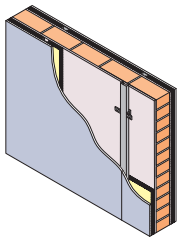

Solid brick wall (103mm) with 13mm plaster each side and Gypframe GL1 Lining Channel framework fixed to **both** sides to give 35mm cavities. Cavities filled with 25mm Isover APR 1200. Linings as in table.

4

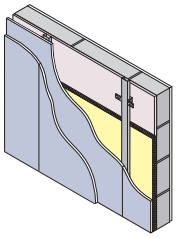

Solid block wall, of mass 200kg/m², with 13mm plaster each side. Gypframe GL1 Lining Channel framework fixed to one side to give 35mm cavity. Cavity filled with 25mm Isover APR 1200. Linings as in table.

5

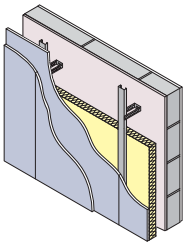

Solid block wall, of mass 200kg/m², with 13mm plaster each side. Gypframe GL1 Lining Channel framework fixed to one side to give 85mm cavity. Cavity filled with 50mm Isover APR 1200. Linings as in table.

Detail	Board type	Lining thickness mm	Sound insulation R_w (R_w + Ctr) dB	Improvement over existing wall R_w (R_w + Ctr) dB	System reference
1	SoundBloc	1 x 12.5	49 (43)	+2 (-1)	B226009
2	SoundBloc	1 x 12.5	57 (50)	+10 (+6)	B226008
3	SoundBloc	1 x 12.5	60 (42)	+13 (-2)	B226010
4	SoundBloc	1 x 12.5	57 (50)	+10 (+6)	B226008
4	SoundBloc	2 x 12.5	60 (55)	+13 (+11)	B226003
5	SoundBloc	1 x 12.5	64 (56)	+17 (+12)	B226007
5	SoundBloc	2 x 12.5	66 (59)	+19 (+15)	B226005

NB The fire resistance and sound insulation performances are for imperforate partitions, walls and ceilings incorporating boards with all joints taped and filled, or skimmed according to British Gypsum's recommendations. The quoted performances are achieved only if British Gypsum components are used throughout, and the Company's fixing recommendations are strictly observed. Any variation in the specifications should be checked with British Gypsum.

Design

Planning - key factors
The depth of the cavity is determined by the positioning of the fixing brackets. Allow for a stand-off of 25mm - 75mm plus the lining thickness for Gypframe GL2 Brackets, and 25mm - 125mm plus the lining thickness for Gypframe GL9 Brackets. These stand-offs are sufficient to correct irregularities normally encountered in solid backgrounds. The stand-off will determine the lining dimension required at door and window reveals and soffits. Ceilings should be installed prior to installing GypLyner UNIVERSAL wall linings. Any abutting partitions should also be installed prior to drylining.

Cavity barriers
Building Regulations may require the provision of vertical cavity barriers to long runs of lining. Minimum 12.5mm plasterboard, cut to cavity depth and screw-fixed to the leg of Gypframe GL1 Lining Channel, will provide a satisfactory cavity barrier.
▶ Refer to **section 10 – Cavity fire barriers.**

Thermal performance
Uncontrolled air movement through the drylining cavity can result in excessive heat loss from the building. The quoted U-values for GypLyner UNIVERSAL wall lining are based on a sealed cavity between the lining and the background. This is achieved in practice if the abutting elements and the background are well fitted, and junctions are sealed.

When the perimeter of the cavity is to be sealed by the drylining contractor, the recommended method is to apply a continuous fillet / ribbon of Gyproc Dri-Wall Adhesive or Gyproc Sealant to the perimeter of the external wall and around any openings.

The designer should also specify a method of restricting air movement around the perimeter of suspended timber floors, such as the provision of a flexible seal between the floor and walls.

Good standards of thermal insulation can be achieved where Gyproc ThermaLine laminates are specified as the lining. There may, however, be a slight risk of pattern staining where temperature, humidity, and soiling conditions are extreme.

Wall lining rigidity
Brackets should be positioned equidistant at maximum 800mm vertical centres. Where there is a requirement for increased rigidity, these support centres should be reduced accordingly, although acoustic performance may be downgraded. Gypframe GL11 GypLyner Anchors are recommended for fixing brackets to the solid background.

Services
The cavity between the metal framework and the background facilitates the incorporation of services. Pipes and conduits should be fixed in position before installing the framing.

When installing Gyproc ThermaLine laminates, the insulation should not be chased to accommodate services. PVC covered cables must not come into contact with polystyrene insulation. Suitable isolation methods such as conduit or capping should be used.
▶ Refer to **section 3.5 – Service installations.**

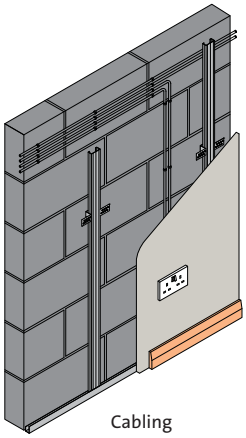
Cabling

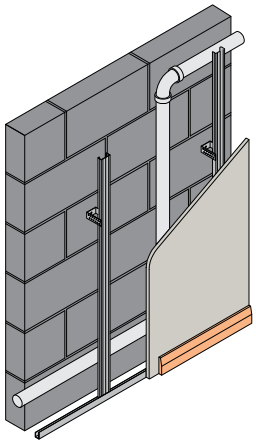
Central heating and waste pipes

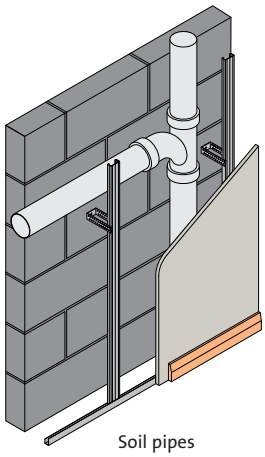
Soil pipes

Fixtures
Lightweight fixtures can be made directly to the lining. Medium weight fixtures should be made to Gypframe 99 FC 50 Fixing Channel. Heavyweight fixtures (to *BS 5234*), such as wash basins and wall cupboards, can be fixed using Gypframe 150 FC 90 Fixing Channel.
▶ Refer to **section 3.5.2 – Service penetrations and fixing into drywall systems.**

Board finishing
▶ Refer to **section 13 – Finishing systems and decorative effects.**

For more information refer to the British Gypsum **SITE** BOOK, available to download from www.british-gypsum.com

Construction details

1 Head and base

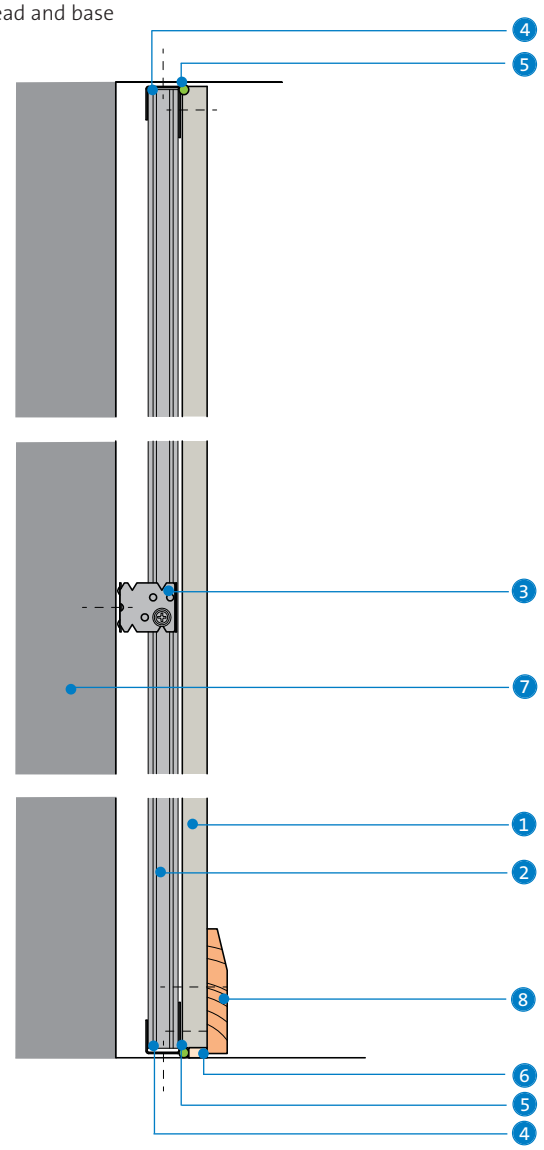

2 External angle

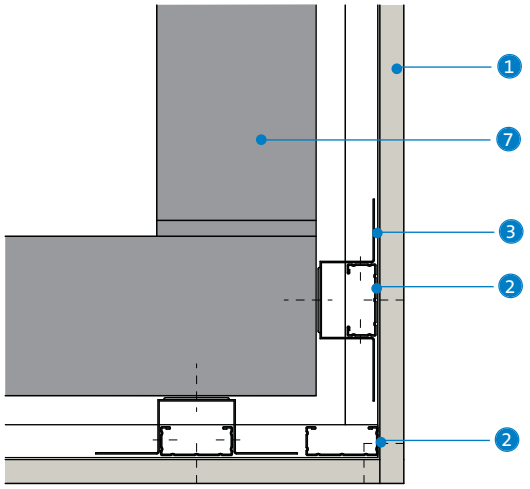

3 Internal angle

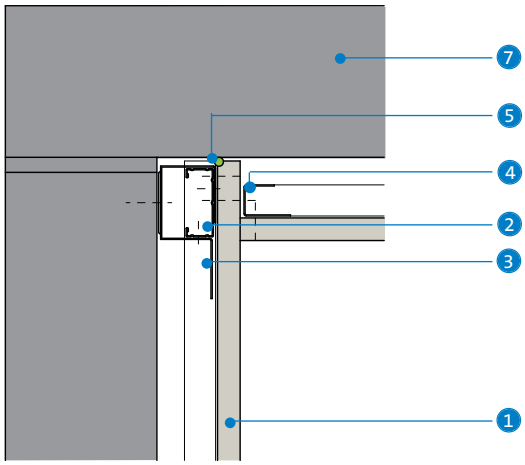

4 Partition junction

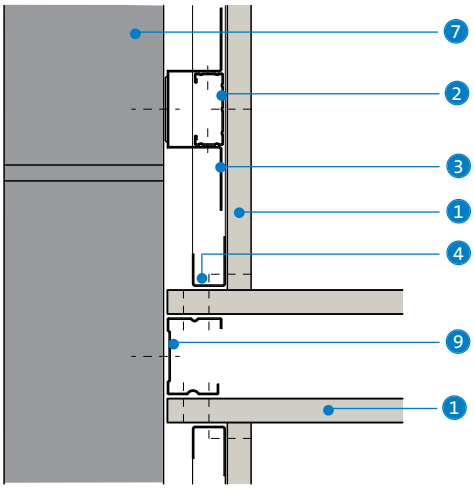

5 Window reveal

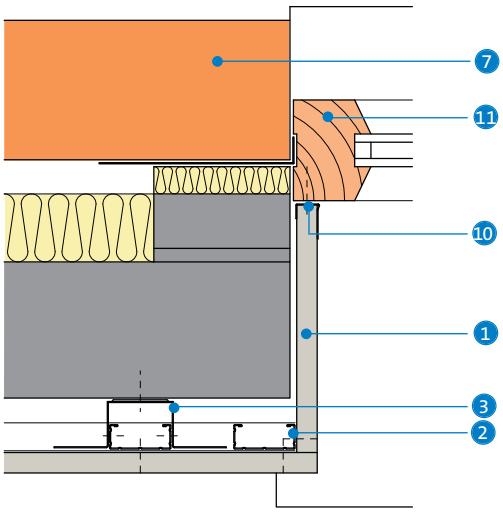

1. Gyproc plasterboard
2. Gypframe GL1 Lining Channel
3. Gypframe GL2 or GL9 Bracket fixed with Gypframe GL11 GypLyner Anchor
4. Gypframe GL8 Track
5. Gyproc Sealant
6. Bulk fill with Gyproc jointing materials (where gap exceeds 5mm)
7. Wall structure
8. Skirting
9. Gypframe 'C' Stud
10. Gyproc Drywall Edge Bead
11. Window frame

GypLyner IWL
Independent wall lining system

This section includes updated information, added since it was first published in July 2009. Please see the WHITE BOOK update document for details.
Last updated 05/07/2010

Aylesbury College, Buckinghamshire

GypLyner IWL

59 – 61 R_w dB | 30 – 90 mins | 0.33 – 0.17 W/m²K

GypLyner IWL independent wall lining is a lightweight, non-loadbearing system, which is built independently of the external wall construction. The system is used in all types of building, but is particularly suitable for those with reinforced concrete or steel frames. The lining provides fire resistance to structural steel sections clad with lightweight metal sheeting, and can also be used in association with new or existing masonry walls to increase sound insulation and meet thermal performance requirements.

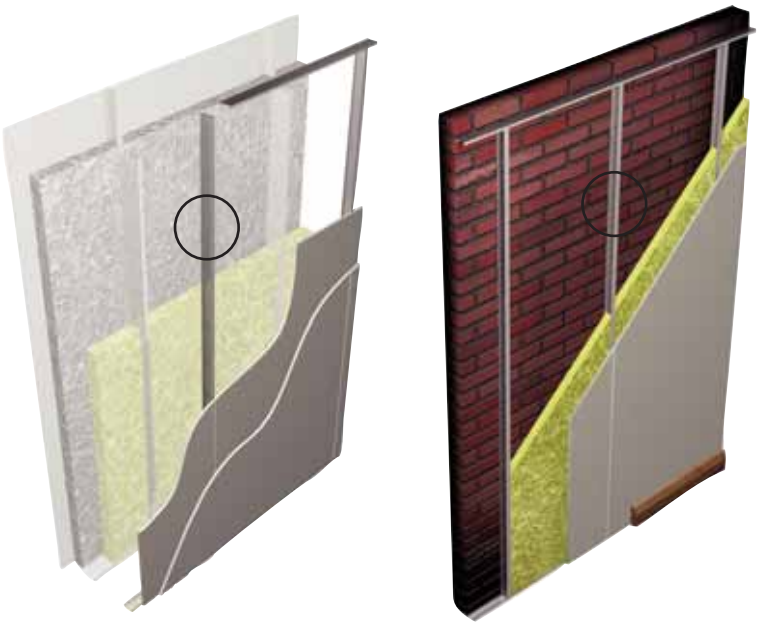

Gypframe 'I' Stud

Key facts

- Fully independent wall lining
- Compatable with external wall constructions including curtain walling, rainscreen claddings, industrial claddings, brickwork and glazed atria
- Used to line non fire-rated service risers
- Used horizontally to form a corridor ceiling
- Satisfies *BS 5234* requirements up to and including Severe Duty[1]
- Provides fire protection to structural steelwork
- Provides fire resistance in association with external structure
- Used to upgrade the sound and thermal performance of an existing masonry wall
- Provides service void

[1] Refer to **section 3.4.2 - Principles of robust design**.

Applications

Due to the design flexibility of GypLyner IWL, this system can be tailored to meet the requirements of a wide range of applications.

Sector

- ✓ Office / commercial
- ✓ Education
- ✓ Housing
- ✓ Retail
- ✓ Healthcare
- ✓ Apartment buildings
- ✓ Sport and leisure
- ✓ Industrial
- ✓ High-rise multi-occupancy

System components

Gypframe metal products

48 I 50 'I' Stud — **Length** 2700, 3000mm

60 I 50 'I' Stud — **Length** 2700, 3600mm

60 I 70 'I' Stud — **Length** 3600, 4200mm

70 I 70 'I' Stud — **Length** 3600, 4200mm

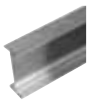

92 I 90 'I' Stud — **Length** 3600, 5000, 6000mm

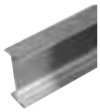

146 I 80 'I' Stud — **Length** 5000, 6000mm

For abutments and openings only

Equivalent 'C' Studs

48 S 50 — **Length** 2400, 2700, 3000, 3600mm

60 S 50 — **Length** 3000, 3600mm

70 S 50 — **Length** 2400, 2700, 3000, 3600mm 4200mm

92 S 50 — **Length** 3600, 4200mm

146 S 50 — **Length** 3000, 3600, 4200mm

Standard Floor & Ceiling Channels
50 C 50
62 C 50
72 C 50
94 C 50
148 C 50
Deep Flange Floor & Ceiling Channels
50 DC 60
62 DC 60
72 DC 60
94 DC 60
148 DC 60
Extra Deep Flange Floor & Ceiling Channels
50 EDC 70
72 EDC 80
94 EDC 70
148 EDC 80
All channels are available in 3600mm only.

Gypframe metal products (continued)

99 FC 50 Fixing Channel — **Length** 2400mm

150 FC 90 Fixing Channel — **Length** 1197mm

GFS1 Fixing Strap — **Length** 2400mm

or

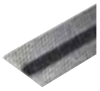

GFT1 Fixing 'T' — **Length** 2400mm

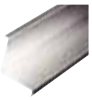

GA5 Internal Fixing Angle — **Length** 3600mm

GA6 Splayed Angle — **Length** 2400, 3600mm

Board products

Gyproc WallBoard[1 2]
Thickness 12.5, 15mm
Width 900, 1200mm

Gyproc FireLine[1 2]
Thickness 12.5, 15mm
Width 1200mm

Gyproc SoundBloc[1]
Thickness 12.5, 15mm
Width 1200mm

Gyproc DuraLine[1]
Thickness 15mm
Width 1200mm

Gyproc ThermaLine laminates
Thickness 22 - 90mm
Width 1200mm

[1] Moisture resistant boards are specified in intermittent wet use areas, e.g. shower cubicles.
[2] Also available in DUPLEX grades where vapour contol is required.

Always use genuine branded British Gypsum components to qualify for **SpecSure**® lifetime warranty

Fixing and finishing products

Gyproc Wafer Head Drywall Screws
For Gypframe metal-to-metal fixing less than 0.8mm thick ('I' studs less than 0.6mm thick).

or

Gyproc Wafer Head Jack-Point Screws
For Gypframe metal-to-metal fixing 0.8mm thick or greater ('I' studs 0.6mm thick and greater).

Gyproc Drywall Screws
For fixing boards to Gypframe metal framing less than 0.8mm thick ('I' studs less than 0.6mm thick).

or

Gyproc Jack-Point Screws
For fixing boards to Gypframe metal framing 0.8mm thick or greater ('I' studs 0.6mm thick and greater).

Gyproc Sealant
Sealing air paths for optimum sound insulation.

Gyproc jointing materials
For seamless jointing.

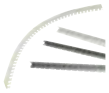

Gyproc edge and angle beads
Protecting and enhancing board edges and corners.

Gyproc Control Joint
To accommodate structural movement.

Gyproc FireStrip
For fire-stopping deflection heads.

Thistle Board Finish or Thistle Multi-Finish
To provide a plaster skim finish.

or

Thistle Durafinish
To provide improved resistance to accidental damage.

Insulation products

Isover Steel Frame Infill Batts (SF2)
50mm, 75mm and 100mm, for improved acoustic and thermal performance.

Installation overview

Gypframe Floor & Ceiling Channels are fixed at the head and base. Gypframe 'I' Studs are friction-fitted vertically within the channel sections to form the framework. This allows for adjustment during boarding. If specified, Isover insulation is fitted between studs. Additional framing is installed as required to support heavy fixtures.

Boards are screw-fixed to framing members to form the lining. Horizontal board joints should be backed with Gypframe GFS1 Fixing Strap or Gypframe GFT1 Fixing 'T'.

Services
Electrical and other services are normally installed at the frame erection stage. Horizontal runs are fixed to the background or can be routed through cut-outs in the studs. Gypframe 99 FC 50 Fixing Channel can be installed between studs to support recessed switch boxes / socket outlets.

For full installation details, refer to the British Gypsum **SITE** BOOK, available to download from www.british-gypsum.com

For full installation details, refer to the British Gypsum **SITE BOOK**, available to download from www.british-gypsum.com

Performance (▶ Refer to **section 3 - Basic principles of system design**)

Table 1 – GypLyner IWL maximum heights[1] for Gypframe 'I' Studs at 600mm centres

Stud type	12.5mm boards maximum heights		15mm boards maximum heights		Gyproc ThermaLine laminates
	single mm	double mm	single mm	double mm	single mm
48 I 50	2400	2700	2400	2800	2400
60 I 50	2400	3000	2700	3300	2400
60 I 70	3000	3600	3300	3900	3000
70 I 70	3600	4200[2]	3900	4300[2]	3600
92 I 90	5100[2]	5700[2]	5400[2]	6000[2]	5100[2]
146 I 80	6900[2]	7200[2]	7200[2]	7500[2]	6900[2]

[1] Based on a limiting deflection of L/240 at 200 Pa. Greater heights can be achieved by reducing stud centres. Contact British Gypsum Drywall Academy for further advice.
[2] For heights between 4200mm and 8000mm, Gypframe Deep Flange Floor & Ceiling Channel should be used at base and at head (subject to deflection criteria).

Table 2 – GypLyner IWL U-values[1] for external claddings with lining / insulation combinations - based on a well vented external cladding cavity

External cladding	Board type	Lining thickness mm	Isover Steel Frame Infill Batts (SF2)	U-value W/m²K (minimum)
Curtain walling / concrete cladding / panels / brickwork / blockwork, etc	ThermaLine SUPER	50	50mm (with Gypframe 48 I 50 'I' Studs)	0.33
	ThermaLine SUPER	60	50mm (with Gypframe 48 I 50 'I' Studs)	0.28
	ThermaLine SUPER	70	50mm (with Gypframe 48 I 50 'I' Studs)	0.25
	ThermaLine SUPER	70	75mm (with Gypframe 70 I 70 'I' Studs)	0.22
	ThermaLine SUPER	70	100mm (with Gypframe 92 I 90 'I' Studs)	0.21
	ThermaLine SUPER	70	2 x 75mm (with Gypframe 146 I 80 'I' Studs)	0.17

[1] U-values are calculated by proportional area method. Contact the British Gypsum Drywall Academy for U-value calculations on specific constructions.

Table 3 – GypLyner IWL linings to steel clad external walls [1]
Solutions to satisfy the requirements of *BS EN 1364-1: 1999 and BS 476: Part 22: 1987*

1

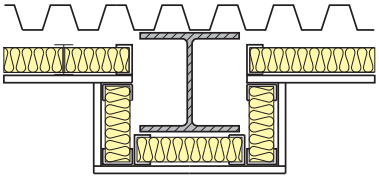

Board linings to one side of Gypframe 'I' Stud framework and 50mm Isover Steel Frame Infill Batts (SF2), forming an independent lining to structural steel columns, in association with external steel cladding. Linings as in table.

Detail	Board type[4]	Lining thickness mm	Duty rating	System reference
Fire resistance – 30 minutes integrity[3] : 30 minutes insulation[2 3] EN BS				
1	WallBoard	2 x 12.5	Severe	B216003
1	SoundBloc	2 x 12.5	Severe	B216003
1	WallBoard	2 x 15	Severe	B216004
1	SoundBloc	2 x 15	Severe	B216004
Fire resistance – 60 minutes integrity[3] : 30 minutes insulation[2 3] EN BS				
1	FireLine	1 x 12.5	Medium	B216025
1	FireLine	1 x 15	Heavy	B216026
Fire resistance – 90 minutes integrity[3] : 30 minutes insulation[2 3] EN BS				
1	FireLine	2 x 12.5	Severe	B216027
1	FireLine	2 x 15	Severe	B216028

[1] The fire resistances apply to external walls, whose construction incorporates structural steel sections with a profiled steel cladding, when the inside of the wall is exposed to fire.
[2] Where the external wall is more than 1m from the boundary, Building Regulations allow relaxation of the provision for insulation to 15 minutes in certain circumstances.
[3] The figures quoted relate to the complete wall structure including the external cladding. The lining also offers fire protection to steel columns from the lining side, subject to A/V (Hp/A) factor. Refer to Table 4.
[4] For improved durability and impact resistance, the outer layer of board can be replaced with a layer of Gyproc DuraLine.

NB The fire resistance and sound insulation performances are for imperforate partitions, walls and ceilings incorporating boards with all joints taped and filled, or skimmed according to British Gypsum's recommendations. The quoted performances are achieved only if British Gypsum components are used throughout, and the Company's fixing recommendations are strictly observed. Any variation in the specifications should be checked with British Gypsum.

Performance (▶ Refer to **section 3 - Basic principles of system design**)

EN BS

Table 4 – GypLyner IWL fire protection to structural steel
Solutions to satisfy the requirements of *DD ENV 13381-2: 2002 and BS 476: Part 21: 1987*

Board type	Lining thickness mm	Fire protection mins	Section factor[1] A/V (Hp/A) m^{-1}
FireLine	1 x 12.5	30	Up to 300
FireLine	1 x 12.5	60	Up to 165 (BS only)
DuraLine	1 x 15	30	Up to 300
WallBoard or SoundBloc	2 x 12.5	30	Up to 300
FireLine	2 x 12.5	60	Up to 300
FireLine	2 x 12.5	90	Up to 200 (BS only)
FireLine	2 x 15	90	Up to 300

[1] Based on four-sided exposure. Protection is afforded to universal column sections as described in *BS 4: Part 1*. Based on critical temperature 550°C (information on other critical temperatures is available).

NB The fire resistance and sound insulation performances are for imperforate partitions, walls and ceilings incorporating boards with all joints taped and filled, or skimmed according to British Gypsum's recommendations. The quoted performances are achieved only if British Gypsum components are used throughout, and the Company's fixing recommendations are strictly observed. Any variation in the specifications should be checked with British Gypsum.

BS

Table 5 – GypLyner IWL linings to masonry construction
Solutions to satisfy the requirements of *BS 476: Part 21: 1987*

1

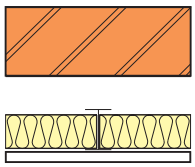

Single or double layer board to one side of Gypframe 'I' Stud framework and 50mm Isover Steel Frame Infill Batts (SF2) forming an independent lining to masonry construction. Linings as in table.

Detail	Board type	Lining thickness mm	Sound insulation R_w (R_w + Ctr) dB	Duty rating	Approx. weight kg/m²	System reference
180 minutes fire resistance[1] BS						
1	WallBoard	1 x 12.5	59 (51)	Medium	11	B216001
1	WallBoard	1 x 15	59 (51)	Medium	13	B216002
1	WallBoard	2 x 12.5	61 (54)	Severe	20	B216031
1	WallBoard	2 x 15	61 (54)	Severe	23	B216033

[1] The fire resistance quoted is that provided by the masonry wall without contribution from the lining.

NB The fire resistance and sound insulation performances are for imperforate partitions, walls and ceilings incorporating boards with all joints taped and filled, or skimmed according to British Gypsum's recommendations. The quoted performances are achieved only if British Gypsum components are used throughout, and the Company's fixing recommendations are strictly observed. Any variation in the specifications should be checked with British Gypsum.

Design

Planning - key factors
The position of services should be pre-determined and their installation planned into the frame erection stage. It is important that all parts of the lining system, including the thermal insulation, should remain independent of the external walling. The lining is erected with the external walling in place and the windows and doors fixed.

Extended heights
Where the wall height exceeds the available length of the 'I' stud, sections of stud can be spliced together to the required length using 600mm lengths of the appropriate floor and ceiling channel, fixed with four Gyproc Wafer Head Drywall Screws in each flange to each side, (see **Construction details – 2**). Where greater heights than listed in **Table 1** are required, it may be possible to brace the lining back to the structure. Note that the system is non-loadbearing and should not be used to provide lateral restraint to masonry or other external wall constructions.

Acoustic performance
GypLyner IWL can be used as an independent lining to improve the sound insulation of new or existing masonry walls. Acoustic testing on a basic masonry wall construction achieving R_w 45 dB sound insulation gave a 14 dB improvement when the wall was lined with **GypLyner IWL** (single board). A 16 dB improvement was achieved with a double layer lining. Please see **Table 5**. Special detailing is required at junctions with sound insulating partitions in order to maintain acoustic performance, (see **Construction details – 5**).

Cavity barriers
Cavity barriers should be included where necessary. If both sides of the cavity are formed by non-combustible or Class 0 materials, barriers are necessary only every 20m. The nature of the barrier and its fixing should not detract from the general performance of the wall.
▶ Refer to **section 10 – Cavity fire barriers.**

Fixing floor and ceiling channels
Gypframe Floor & Ceiling Channels must be securely fixed with a row of fixings at 600mm maximum centres. For 94mm channels and above, two rows of staggered fixings are required, each row at 600mm centres and each fixing 25mm in from the flange. If the floor is uneven, a 38mm thick timber sole plate equal to the width of the channel should be used.

If the concrete or screeded floor is new, consideration should be given to the installation of a damp-proof membrane between the floor surface and the channel or sole plate.

Deflection heads
The system can accommodate deflection at the head with suitable detailing incorporating Gypframe Deep Flange or Extra Deep Flange Floor & Ceiling Channels. Contact the British Gypsum Drywall Academy for further guidance.
▶ Refer to **section 3.2.2 – Principles of building acoustics**.

Damp or rain penetration
In refurbishment projects, where damp or rain penetration may exist, normal corrective measures, such as a new damp course, tanking, or external wall coating, must be taken prior to the installation of the dry internal lining. The cavity between the external wall and the lining system could be drained and ventilated to the outside.

Thermal performance
Uncontrolled air movement through the drylining cavity can result in excessive heat loss from the building. This can be reduced in practice if the abutting elements and the background are well fitted, and junctions are sealed.

The designer should also specify a method of restricting air movement around the perimeter of suspended timber floors, such as the provision of a flexible seal between the floor and walls.

Insulation
Isover Steel Frame Infill Batts (SF2) are inserted to a friction-fit within the stud cavity. The slabs are self-supporting, receiving internal support from the stud flanges, except where 50mm insulation is fitted into Gypframe 92 I 90 'I' Studs or Gypframe 146 I 80 'I' Studs. In this case, a 150mm x 50mm strip of Isover Steel Frame Infill Batts (SF2) is inserted to retain the slab. With Gypframe 146 I 80 'I' Stud, two strips of insulation should be inserted to retain the slab.

Services
The stud cut-outs can be used for services provided that the Isover insulation remains in place. The positioning of stud cut-outs is shown in **Construction details – 1**.

Both horizontal and vertical services can be included behind the lining system, and accessed via a fire-rated Gyproc Profilex Access Panel.
▶ Refer to **section 14 – Products, Access panels.**

Surface mounted services should be located against the plasterboard lining, and fixed through the lining to the stud framework. Any interruptions in the lining integrity will downgrade its performance. The installation of electrical services should be carried out in accordance with *BS 7671*.
▶ Refer to **section 3.5 – Service installations.**

Fixtures
Lightweight fixtures can be made directly to the partition linings. Medium weight fixtures can be made to Gypframe 99 FC 50 Fixing Channel. Heavyweight fixtures (to *BS 5234*), such as wash basins and wall cupboards, can be fixed using Gypframe 150 FC 90 Fixing Channel.
▶ Refer to **section 3.5.2 – Service penetrations and fixing into drywall systems**.

Board finishing
▶ Refer to **section 13 – Finishing systems and decorative effects.**

For more information refer to the British Gypsum **SITE** BOOK, available to download from www.british-gypsum.com

▶ Please refer to **section 3 - Basic principles of system design** for general guidance

Construction details

1 Service cut-outs - Gypframe 'C' Studs and Gypframe 'I' Studs

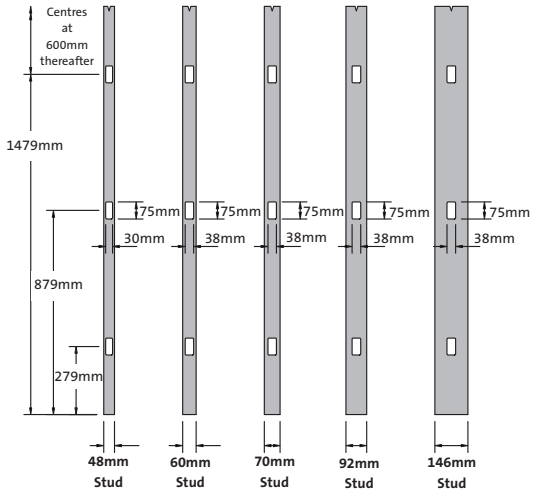

2 Gypframe 'I' Stud / splicing and bracing

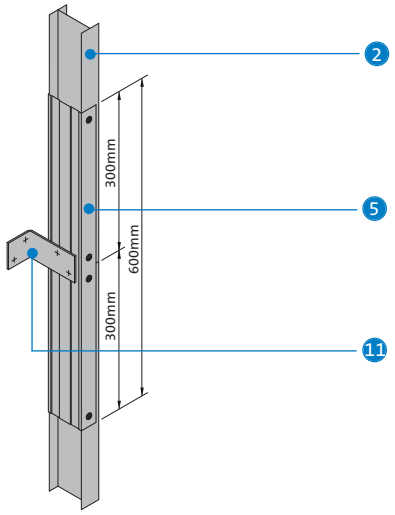

3 Head and base

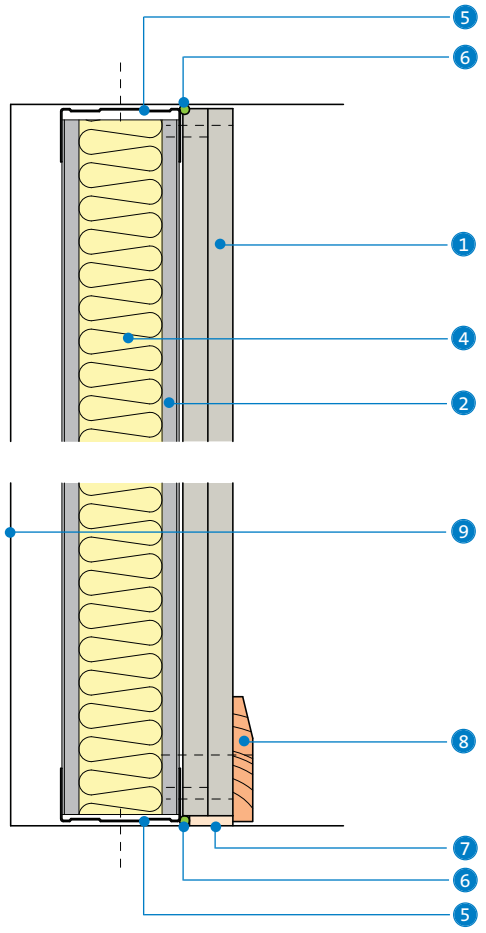

4 Partition junction

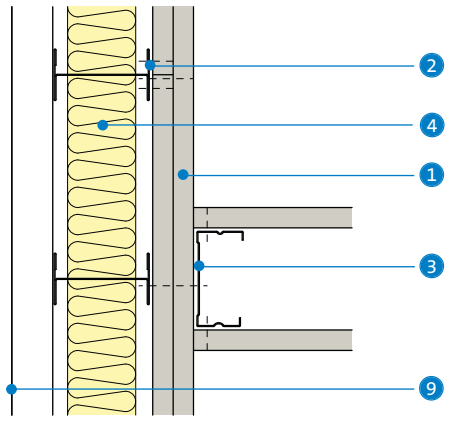

5 Partition junction to optimise acoustic performance and reduce flanking transmission

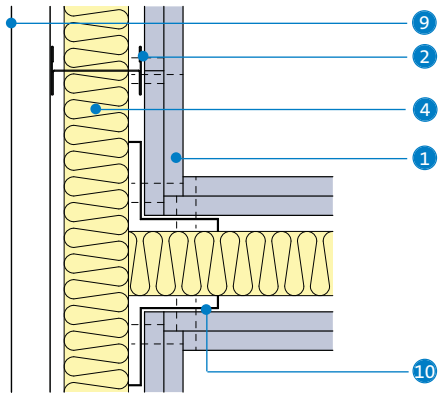

1. Gyproc plasterboard
2. Gypframe 'I' Stud
3. Gypframe 'C' Stud
4. Isover insulation
5. Gypframe Standard Floor & Ceiling Channel
6. Gyproc Sealant
7. Bulk fill with Gyproc jointing materials (where gap exceeds 5mm)
8. Skirting
9. Wall structure
10. Gypframe GA5 Internal Fixing Angle
11. Suitable size angle brace by others

6 Lining around steel column

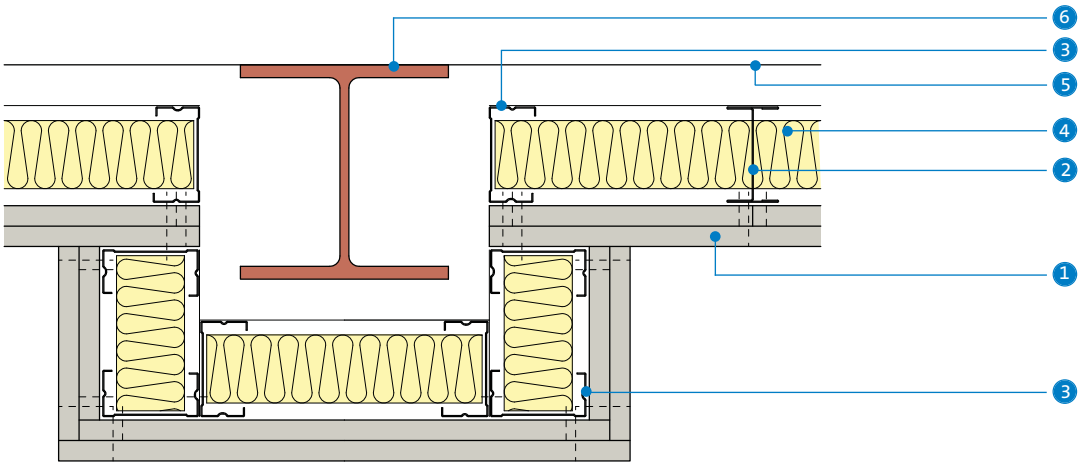

7 Concrete column junction

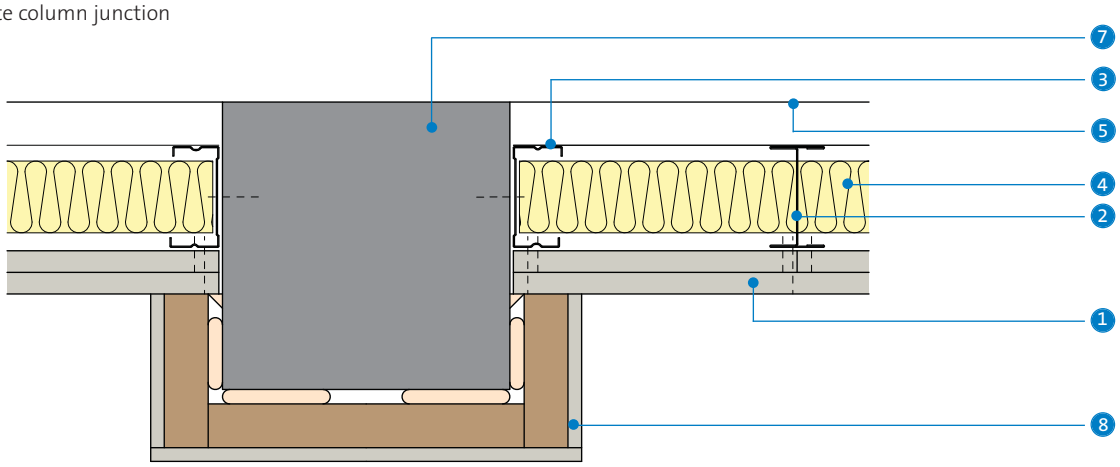

1. Gyproc plasterboard
2. Gypframe 'I' Stud
3. Gypframe 'C' Stud
4. Isover insulation
5. Wall structure
6. Steel column
7. Concrete column
8. **DriLyner IL** wall lining system

FlameLyner

Industrial fire-resistant lining system

This section includes updated information, added since it was first published in July 2009. Please see the WHITE BOOK update document for details.
Last updated 05/07/2010

Bunches factory, Nottingham

FlameLyner

120 mins

FlameLyner is used to line the external walls of steel framed industrial buildings. The system is often installed above a 2-3m high loadbearing block wall, where the wall is 1m or more from the relevant boundary as defined in Building Regulations Approved Document B. It can be used in most types of industrial property, including factories, warehouses and industrial units.

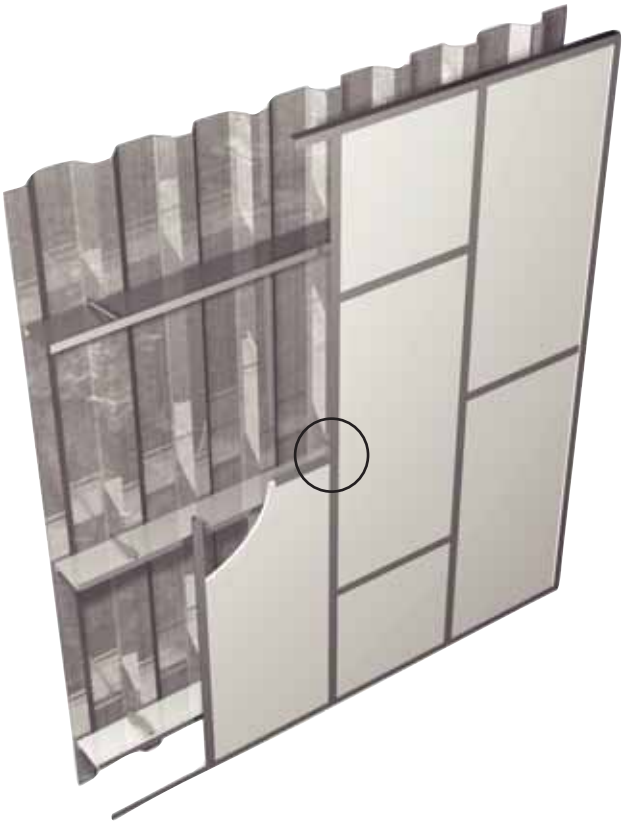

Gypframe Main 'T'

Gypframe Cross 'T'

Key facts

- Durable industrial lining
- Glasroc F FLAMELINE provides an exceptionally smooth surface
- Provides a sheeting rail lining
- Uses lightweight 'T' sections
- Provides a high level of fire resistance

Applications

Industrial applications, for example factories and warehouses.

Sector

✓ **Industrial**

System components

Gypframe metal products

GT1 Main 'T'

Length
3600mm

GT2 Cross 'T'
Notched ends to engage into GT1 Main 'T' web.

Length
603mm

GT3 Spring Wedge
Used for securing the board by engaging through cut-outs in the web of the 'T' sections.

GT4A and GT4B Bracing Straps
Used for securing GT1 Main 'T' sections to sheeting rails.

Length
300mm and 450mm respectively

GT5 Internal Fixing Angle
Used for trimming joints.

Length
3000mm

Board products

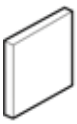

Glasroc F FLAMELINE

Thickness	6, 10mm
Width	600mm
Length	2400mm

Insulation products

Isover Modular Roll
80mm, for improved thermal and acoustic performance.

Stone mineral wool (by others)
To achieve fire performance.

Always use genuine branded British Gypsum components to qualify for **SpecSure**® lifetime warranty

Installation overview

Gypframe GT5 Internal Fixing Angle is installed at perimeters to trim and constrain the board edges. The angle is secured to the structure at 600mm centres using appropriate fixings. Gypframe GT1 Main 'T' is located vertically to the inside of sheeting rails and secured to each sheeting rail using Gypframe GT4A or GT4B Bracing Straps (most appropriate length is selected).

Glasroc F FLAMELINE is installed by inserting a vertical edge into a Gypframe GT1 Main 'T' and securing with Gypframe GT3 Spring Wedges. The GT3 is engaged through cut-outs in the 'T' section web. A Gypframe GT2 Cross 'T' section is positioned to support the horizontal board-end and the notched ends located into slots in the Main 'T's. Ensure that horizontal board-ends are staggered.

A further Gypframe GT1 Main 'T' section is located and the board secured by inserting Gypframe GT3 Spring Wedges at 300mm centres. Stone mineral wool is installed between sheeting rails and behind the Main 'T' where fire resistance is a requirement. If thermal and / or sound insulation is required, Isover Modular Roll can be incorporated within the system. Main 'T's are extended by locating the notched end of one Main 'T' into the slotted end of another. Further framing members, insulation and lining boards are installed progressively to build up the wall lining. Maximum span of the Gypframe GT1 Main 'T' section between sheathing rails is 1700mm.

Performance (▶ Refer to **section 3 - Basic principles of system design**)

Table 1 – FlameLyner fire resistance
Solutions to satisfy the requirements of *BS 476: Part 22: 1987*

Construction	Fire integrity minutes	System reference
10mm Glasroc F FLAMELINE in the **FlameLyner** grid retained by Gypframe GT3 Spring Wedges at 300mm centres. External steel sheeting minimum 0.55mm thick.[2]	120[1]	G31004
6mm Glasroc F FLAMELINE in the **FlameLyner** grid retained by Gypframe GT3 Spring Wedges at 300mm centres. 80mm stone mineral wool (nominal 23kg/m³) in cavity. External steel sheeting minimum 0.90mm thick.	120[1]	G31002

[1] Modified 120 minutes resistance when the inside of the wall is exposed to fire ('Modified' means the insulation requirement is reduced to 15 minutes minimum). This is acceptable when the external wall is 1m or more from the boundary.
[2] For improved standards of thermal and sound insulation 80mm Isover Modular Roll should be fitted within the system cavity.

NB The quoted performances are achieved only if British Gypsum components are used throughout, and the Company's fixing recommendations are strictly observed. Any variation in the specifications should be checked with British Gypsum.

Design

Fire resistance
The fire resistance requirements for an external wall are mainly dependent on its position in relation to adjacent buildings. Reference should be made to Building Regulations Approved Documents to ensure that the requirements can be fully satisfied. In situations where the structural steel frame of the wall construction incorporates steel columns that are not entirely within the cavity, the stanchions must be independently encased.
▶ Refer to **section 9 – Steelwork encasement systems.**

The specially designed Gypframe GT1 Main 'T' provides an allowance for linear expansion in the event of a fire. Up to 120 minutes fire integrity may be achieved using Glasroc F FLAMELINE as the lining. Adjacent Gypframe GT2 Cross 'T's should be staggered (see system isometric). If the FlameLyner is built off a dwarf wall, please refer to BRE IP 21/88 for guidance regarding 'capping' of the dwarf wall.

Cavity barriers
Cavity barriers may be required for the subdivision of cavities at 8m or 20m maximum spacings, depending on whether the class of surface exposed within the cavity is Class 0. Such cavity barriers can be provided by Glasroc F FLAMELINE screw-fixed to a suitable framework. Abutting edges of boards must be backed by steel sections to prevent the passage of smoke and flame. Alternatively, a wire-reinforced stone mineral wool blanket not less than 50mm thick can be used.
▶ Refer to **section 10 – Cavity fire barriers.**

Fire-stopping
It is necessary to provide a suitable fire-stopping material at the junctions of cavity barriers with the external sheeting and the internal lining, and around any permitted holes in the cavity barrier for cables, services, etc.

Thermal insulation
Improved standards of thermal insulation can be achieved by incorporating 80mm Isover Modular Roll or stone mineral wool into the wall construction in association with a ventilated cavity. The latter is used where fire resistance is a requirement. The λ values for 80mm Isover Modular Roll = 0.043W/mK, and stone mineral wool (23kg/m^3) = 0.040W/mK.

Water vapour resistance
Precautions such as cavity ventilation may be necessary to reduce the risk of interstitial condensation. If the lining is to be subjected to excessively humid conditions, special provision such as sealing the lining boards and application of a suitable impervious paint treatment can be considered.

Durability
Where it is not possible to use brick / block or guard rails at low level (2m - 3m), it is advisable to use additional Gypframe GT1 Main 'T's and / or Gypframe GT2 Cross 'T's. This is achieved by reducing Gypframe GT1 Main 'T' centres to 300mm, and Gypframe GT2 Cross 'T' centres to 600mm. If lining boards are subject to damage they should be replaced.

▶ Please refer to **section 3 - Basic principles of system design** for general guidance

Construction details

1 Base - section

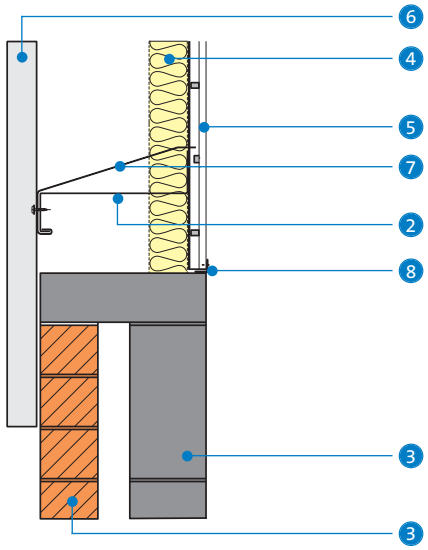

2 Wall lining abutment to **FireCase** column encasement - plan

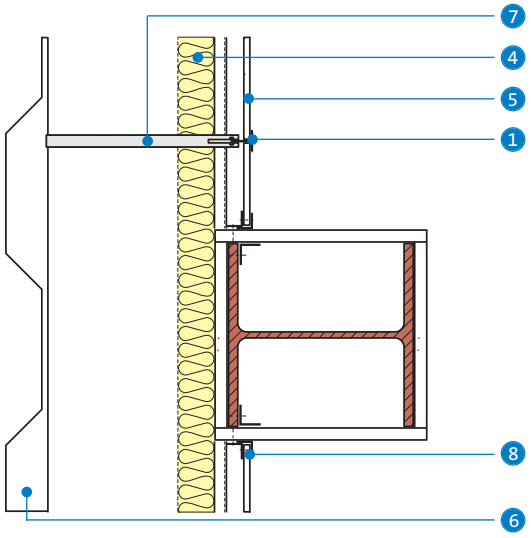

3 Gypframe GT3 Spring Wedge retaining Glasroc F FLAMELINE - plan

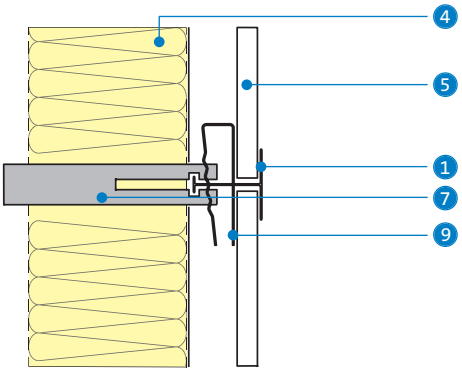

1. Gypframe GT1 Main 'T'
2. Sheeting rail
3. Brick / block base
4. Insulation (stone mineral wool 23kg/m³ or Isover Modular Roll, depending on board thickness)
5. Glasroc F FLAMELINE
6. External cladding
7. Gypframe GT4A / GT4B Bracing Strap
8. Gypframe GT5 Internal Fixing Angle
9. Gypframe GT3 Spring Wedge

CasoLine MF

Concealed grid MF suspended ceiling system

This section includes updated information, added since it was first published in July 2009. Please see the WHITE BOOK update document for details.
Last updated 21/01/2011

Joseph Chamberlain College, Birmingham

CasoLine MF

0.25 – 0.70 α_w Sound absorption

56 – 66 R_w dB Airborne

68 – 50 L_{nw} dB Impact

30 – 120 mins

CasoLine MF is a suspended ceiling system suitable for most internal drylining applications. The fully concealed grid and ceiling lining can be used in conjunction with Gyproc plasterboards and Gyptone and Rigitone boards to create a seamless, monolithic appearance.

A

Gypframe MF7 Primary Support Channel +

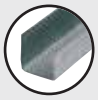

Gypframe MF6 Perimeter Support Channel +

Gyproc Wafer Head Jack-Point Screws +

Gypframe MF5 Ceiling Section

Key facts

- Monolithic appearance
- Suspension from concrete or timber floors and purlins
- Acoustic hangers provide option of resilient suspension
- Durable ceiling lining
- Ventilation ducts and other services accommodated in plenum
- Simple accommodation of access panels
- Easy to create bulkheads and level change
- Easily integrated with CasoLine GRID
- Fully integrated access hatches

Applications

A wide range of residential and commercial applications.

Sector

✓ Education

✓ Healthcare

✓ Apartment buildings

✓ High-rise multi-occupancy

System components

Gypframe metal products

MF5 Ceiling Section — **Length** 3600mm
Secondary section below Gypframe MF7 Primary Support Channel.

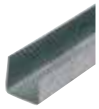

MF6 Perimeter Channel — **Length** 3600mm
Perimeter support for Gypframe MF5 Ceiling Section.

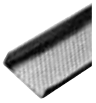

MF7 Primary Support Channel — **Length** 3600mm
Primary support section.

MF8 Strap Hanger — **Length** 25m (coil)
Suspension of ceiling grid.
or
GA1 Steel Angle — **Length** 2900mm

GAH1 Acoustic Hanger — **Length** 35mm
GAH2 Acoustic Hanger — **Length** 70mm
(supplied with washers).

MF9 Connecting Clip
Alternative method for fixing Gypframe MF5 Ceiling Section to Gypframe MF7 Primary Support Channel.

MF11 Nut and Bolt
Joining hanger to soffit cleat.

MF12 Soffit Cleat
Suspension point from structural soffit.

Board products

Gyproc WallBoard[1]
Thickness 12.5, 15mm
Width 900mm

Gyproc SoundBloc
Thickness 12.5, 15mm
Width 1200mm

Gyproc FireLine[1]
Thickness 12.5, 15mm
Width 900mm

Glasroc F MULTIBOARD
Thickness 6, 10, 12.5mm
Width 1200mm

Glasroc F FIRECASE
Thickness 15mm
Width 600, 1200mm

[1] Also available in DUPLEX grades where vapour control is required.

Fixing and finishing products

Gyproc Profilex Access Panels
For access to the plenum for maintenance purposes.

Gyptone Access Panels
To integrate with the Gyptone range of ceiling boards - LINE 6, QUATTRO 41, 46 and 47.

Gyproc Wafer Head Drywall Screws
For Gypframe metal-to-metal fixing less than 0.8mm thick ('I' studs less than 0.6mm thick).

Gyproc Wafer Head Jack-Point Screws
For fixing hanger to Gypframe MF7 Primary Support Channel, and for fixing Gypframe MF5 Ceiling Section to Gypframe MF7 Primary Support Channel.

Gyproc Drywall Screws
For fixing boards to Gypframe metal framing less than 0.8mm thick ('I' studs less than 0.6mm thick).

Gyproc Sealant
Sealing air paths for optimum sound insulation.

Gyproc jointing materials
For seamless jointing.

Rigitone installation tools
For installation and finishing of Rigitone boards.

Rigitone Vario 60
For jointing of Rigitone boards.

Thistle GypPrime
For controlling suction on Rigitone board edges.

Thistle Board Finish or Thistle Multi-Finish
To provide a plaster skim finish.

Insulation products

Isover APR 1200
25mm and 50mm, for improved acoustic and thermal performance.

Isover Spacesaver Ready-Cut
100mm, for improved acoustic and thermal performance.

Isover Frame Batt 32
50mm, for improved acoustic, thermal and fire performance.

Isover Sound Deadening Floor Slab
For providing sound deadening in timber-based intermediate separating floors.

Stone mineral wool (by others)
To achieve fire performance.

System components (continued)

Gyptone board products

Gyptone QUATTRO 41
Thickness 12.5mm
Length 2400mm
Width 1200mm

Gyptone QUATTRO 45
Thickness 12.5mm
Length 2400mm
Width 900mm

Gyptone QUATTRO 46
Thickness 12.5mm
Length 2400mm
Width 1200mm

Gyptone QUATTRO 47
Thickness 12.5mm
Length 2400mm
Width 1200mm

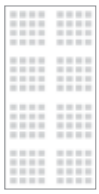

Gyptone LINE 6
Thickness 12.5mm
Length 2400mm
Width 1200mm

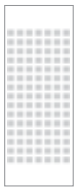

Gyptone LINE 7 Curve
Thickness 6.5mm
Length 2400mm
Width 900mm

Gyptone BASE Curve
Thickness 6.5mm
Length 2400mm
Width 900mm

Rigitone board products

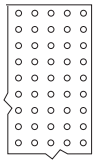

Rigitone 8/18
Thickness 12.5mm
Length 1998mm
Width 1188mm

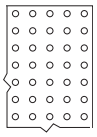

Rigitone 10/23
Thickness 12.5mm
Length 2001mm
Width 1196mm

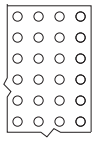

Rigitone 15/30
Thickness 12.5mm
Length 2010mm
Width 1200mm

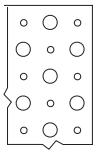

Rigitone 12-20/66
Thickness 12.5mm
Length 1980mm
Width 1188mm

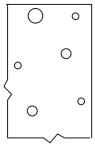

Rigitone 8-15-20
Thickness 12.5mm
Length 2000mm
Width 1200mm

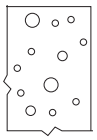

Rigitone 8-15-20 SUPER
Thickness 12.5mm
Length 1960mm
Width 1200mm

Always use genuine branded British Gypsum components to qualify for **SpecSure**® lifetime warranty

Installation overview

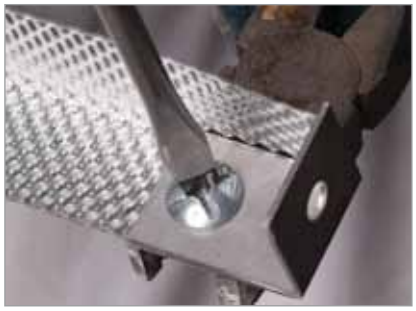
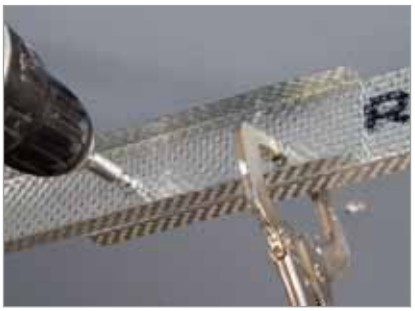

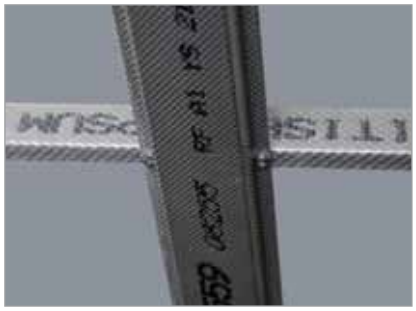

Suspension from concrete soffit
Gypframe MF6 Perimeter Channel is fixed to the wall at maximum 600mm centres, and Gypframe MF12 Soffit Cleats secured to the soffit at 1200mm centres, using appropriate fixings. Gypframe MF8 Strap Hanger or Gypframe GA1 Steel Angles are pre-cut and secured to the soffit cleats with Gypframe MF11 Nut and Bolt. Gypframe MF7 Primary Support Channels are installed over the Gypframe MF6 Perimeter Channels. Fix hangers (two per fixing) to Gypframe MF7 Primary Support Channel using Gyproc Wafer Head Jack-Point Screws. Gypframe MF5 Ceiling Sections are run at right angles to the underside of primary channels to form the secondary grid. The ceiling sections are secured to the primary channels by using two Gyproc Wafer Head Jack-Point Screws. Alternatively, the Gypframe MF5 Ceiling Sections can be secured to the Gypframe MF7 Primary Support Channels using Gypframe MF9 Connecting Clips. Please refer to 'Ceiling lift' in the Design section. Boards are fixed to the secondary grid to form single or multi-layer linings as specified.

Suspension from timber joists
The procedure is as for concrete except that soffit cleats are not required – hangers are twice fixed directly to the side of the joists.

Board fixings
Board fixings for Gyproc and British Gypsum specialist boards should be at 150mm centres at board-ends, and at 230mm centres within the field of the board.

Board fixings for Gyptone boards should be at 230mm centres across board-ends and through the field of the board. Board fixings for Rigitone boards should be at 150mm centres at perimeters and 230mm through the field of the board.

A special procedure is used for fixing and jointing Rigitone boards. Detailed installation notes are given in the current British Gypsum **Ceilings Installation Guide**, available to download from www.british-gypsum.com

For full installation details, refer to the British Gypsum **SITE BOOK**, available to download from www.british-gypsum.com

For full installation details, refer to the British Gypsum **SITE BOOK**, available to download from www.british-gypsum.com

Performance (▶ Refer to **section 3 - Basic principles of system design**)

Fire resistance

Table 1 – CasoLine MF fire protection to timber floor construction
Solutions to satisfy the requirements of *BS EN 1365-2: 2000*

1

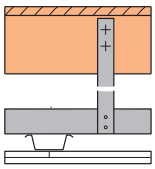

Floor boarding of 21mm minimum t&g softwood or wood particle floor boarding. Solid timber joists 38 x 195mm at 600mm centres. **CasoLine MF** suspended ceiling fixed to joists. Ceiling linings as in table.

2

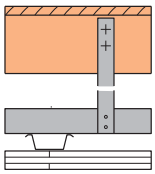

Floor boarding of 21mm minimum t&g softwood or wood particle floor boarding. Solid timber joists 38 x 195mm at 600mm centres. **CasoLine MF** suspended ceiling fixed to joists. Ceiling linings as in table.

Detail	Board type	Ceiling lining thickness mm	MF5 support centres mm	MF7 support centres mm	System reference
60 minutes fire resistance EN					
1	FireLine	2 x 12.5	450	1200	C106003
90 minutes fire resistance EN					
2	Glasroc F MULTIBOARD	3 x 10	450	1200	G106035

Table 2 – CasoLine MF fire protection to floor or roof cavity above suspended ceiling [1]
Solutions to satisfy the requirements of *BS EN 1364-2: 1999*

1

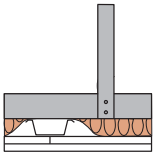

CasoLine MF suspended ceiling fixed to structure. 25mm stone mineral wool slabs (100kg/m³) laid over Gypframe MF5 Ceiling Section. Ceiling linings as in table.

Detail	Board type	Ceiling lining thickness mm	MF5 support centres mm	MF7 support centres mm	System reference
30 minutes fire resistance EN					
1	FireLine	2 x 12.5	450	1200	C106046
60 minutes fire resistance EN					
1	Glasroc F FIRECASE	2 x 15	450	1200	G106040

[1] The requirement for providing cavity barriers in the same plane as fire-resistant walls may not apply to cavities in floors and roofs if the ceiling beneath the floor or roof cavity provides a minimum of a full 30 minutes fire resistance (30 mins. integrity : 30 mins. insulation) in addition to satisfying other requirements. Refer to **section 10 – Cavity fire barriers**.

NB The fire resistance and sound insulation performances are for imperforate partitions, walls and ceilings incorporating boards with all joints taped and filled, or skimmed according to British Gypsum's recommendations. The quoted performances are achieved only if British Gypsum components are used throughout, and the Company's fixing recommendations are strictly observed. Any variation in the specifications should be checked with British Gypsum.

Performance (▶ Refer to **section 3 - Basic principles of system design**)

Table 3 – CasoLine MF fire protection to timber floor construction
Solutions to satisfy the requirements of *BS 476: Part 21: 1987*

1

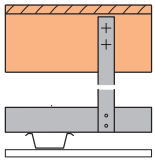

Floor boarding of 21mm minimum t&g softwood or wood particle floor boarding. Solid timber joists. 38 x 195mm at 600mm centres. **CasoLine MF** suspended ceiling fixed to joists. Ceiling linings as in table.

2

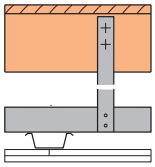

Floor boarding of 21mm minimum t&g softwood or wood particle floor boarding. Solid timber joists 38 x 195mm at 600mm centres. **CasoLine MF** suspended ceiling fixed to joists. Ceiling linings as in table.

3

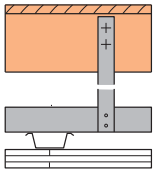

Floor boarding of 21mm minimum t&g softwood or wood particle floor boarding. Solid timber joists 38 x 195mm at 600mm centres. **CasoLine MF** suspended ceiling fixed to joists. Ceiling linings as in table.

Detail	Board type	Ceiling lining thickness mm	Approx. weight kg/m²	MF5 support centres mm	MF7 support centres mm	System reference
30 minutes fire resistance BS						
1	FireLine	1 x 12.5	11	450	1200	C106001
2	WallBoard	2 x 12.5	18	450	1200	C106002
60 minutes fire resistance BS						
2	FireLine	2 x 12.5	21	450	1200	C106003
90 minutes fire resistance BS						
2	FireLine	2 x 15	25	450	900	C106004
120 minutes fire resistance BS						
3	Glasroc F MULTIBOARD	3 x 10	30	450	1200	G106035

Table 4 – CasoLine MF fire protection to floor or roof cavity above suspended ceiling [1]
Solutions to satisfy the requirements of *BS 476: Part 22: 1987*

1

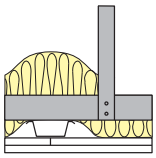

CasoLine MF suspended ceiling fixed to structure. Normal fixing centres for Gypframe MF5s and MF7s (450mm and 1200mm respectively). Insulation laid over Gypframe MF5 Ceiling Section. 100mm Isover General Purpose Roll laid over Gypframe MF5 Ceiling Section. Ceiling linings as in table.

2

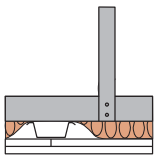

CasoLine MF suspended ceiling fixed to structure. Normal fixing centres for Gypframe MF5s and MF7s (450mm and 1200mm respectively). 30mm stone mineral wool slab 45 kg/m³ laid over Gypframe MF5 Ceiling Section. Ceiling linings as in table.

Detail	Board type	Ceiling lining thickness mm	MF5 support centres mm	MF7 support centres mm	System reference
30 minutes fire resistance BS					
1	WallBoard	2 x 12.5	450	1200	C106045
60 minutes fire resistance BS					
2	FireLine	2 x 15	450	1200	C106051

[1] The requirement for providing cavity barriers in the same plane as fire-resistant walls may not apply to cavities in floors and roofs if the ceiling beneath the floor or roof cavity provides a minimum of a full 30 minutes fire resistance (30 mins. integrity : 30 mins. insulation) in addition to satisfying other requirements. Refer to **section 10 – Cavity fire barriers**.

NB The fire resistance and sound insulation performances are for imperforate partitions, walls and ceilings incorporating boards with all joints taped and filled, or skimmed according to British Gypsum's recommendations. The quoted performances are achieved only if British Gypsum components are used throughout, and the Company's fixing recommendations are strictly observed. Any variation in the specifications should be checked with British Gypsum.

Table 5 – CasoLine MF fire protection to steel beams supporting concrete floors [1]
Solutions to satisfy the requirements of *BS 476: Part 23: 1987*

1

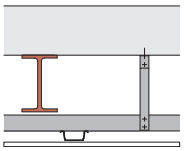

CasoLine MF ceiling suspended beneath steel beams supporting a concrete floor. Ceiling linings as in table.

2

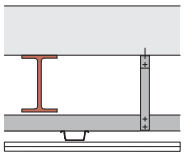

CasoLine MF ceiling suspended beneath steel beams supporting a concrete floor. Ceiling linings as in table.

Detail	Board type	Ceiling lining thickness mm	Approx. weight kg/m²	MF5 support centres mm	MF7 support centres mm	System reference
30 minutes fire resistance BS						
2	WallBoard	2 x 12.5	18	450	1200	C100013
60 minutes fire resistance BS						
1	FireLine	1 x 12.5	11	450	1200	C100014
1	Glasroc F MULTIBOARD	1 x 12.5	12	450	1200	G100036
120 minutes fire resistance BS						
2	Glasroc F MULTIBOARD	2 x 10	20	400	1200	G100038
2	FireLine	2 x 15	25	450	900	C100015

[1] Concrete floors as described in *BS 476: Part 23*. The steel beams subjected to test had a section factor A/V (Hp/A) of 205m^{-1} calculated on the basis of three sided profiled exposure. The suspended ceiling will also provide adequate protection to steel beams with a lower section factor.

Performance (▶ Refer to **section 3 - Basic principles of system design**)

Sound insulation

Table 6 – CasoLine MF upgrading the sound insulation of concrete floors [1]

1
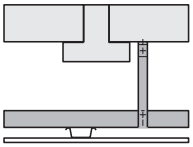

CasoLine MF ceiling suspended beneath basic floor to give 240mm cavity. Ceiling linings as in table.

2
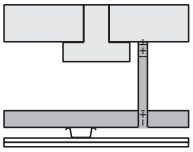

CasoLine MF ceiling suspended beneath basic floor to give 240mm cavity. Ceiling linings as in table.

3
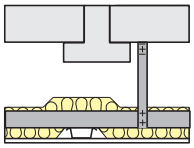

CasoLine MF ceiling suspended beneath basic floor to give 240mm cavity, with 100mm Isover Spacesaver Ready-Cut in cavity. Ceiling linings as in table.

4
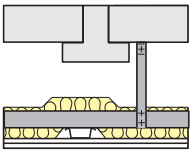

CasoLine MF ceiling suspended beneath basic floor to give 240mm cavity, with 100mm Isover Spacesaver Ready-Cut in cavity. Ceiling linings as in table.

Detail	Board type	Ceiling lining thickness mm	Approx. weight kg/m²	Sound insulation Airborne R_w (R_w + Ctr) dB	Impact L_{nw} dB	System reference
1	WallBoard	1 x 12.5	10	56 (50)	68	C100016
2	WallBoard	2 x 12.5	18	58 (51)	66	C100017
3	SoundBloc	1 x 12.5	13	61 (51)	60	C100018
4	SoundBloc	2 x 12.5	23	64 (55)	57	C100019

[1] Basic floor construction is lightweight concrete joist floor with insulated concrete infill panel (surface density of infill is 90kg/m²) and total depth 150mm. Sound insulation is R_w 35 dB (airborne) and L_{nw} 91 dB (impact).

NB The fire resistance and sound insulation performances are for imperforate partitions, walls and ceilings incorporating boards with all joints taped and filled, or skimmed according to British Gypsum's recommendations. The quoted performances are achieved only if British Gypsum components are used throughout, and the Company's fixing recommendations are strictly observed. Any variation in the specifications should be checked with British Gypsum.

Table 7 – CasoLine MF upgrading the fire resistance and sound insulation of timber floors [1]

Solutions to satisfy the requirements of *BS EN 1365-2: 2000* (where applicable) and *BS 476: Part 21: 1987*

1

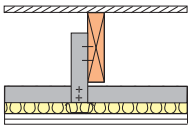

CasoLine MF ceiling suspended beneath basic floor (ceiling removed) to give 277mm cavity. 100mm Isover Spacesaver Ready-Cut laid on ceiling boards. Ceiling linings as in table.

2

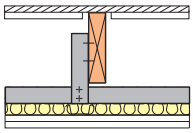

CasoLine MF ceiling suspended beneath basic floor (ceiling removed) with a layer of Gyproc Plank fixed to the underside of the chipboard to give a 258mm cavity. 100mm Isover Spacesaver Ready-Cut laid on ceiling boards. Ceiling linings as in table.

3

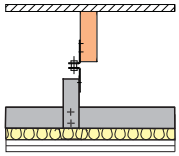

CasoLine MF ceiling suspended beneath basic floor (ceiling removed) using Gypframe Acoustic Hangers to give 277mm cavity. 100mm Isover Spacesaver Ready-Cut laid on ceiling boards. Ceiling linings as in table.

4

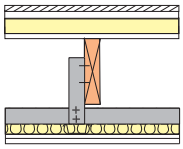

New floating floor[2] laid over joists. **CasoLine MF** ceiling suspended beneath 195mm x 45mm timber joists at 600mm centres to give 277mm cavity. 100mm Isover Spacesaver Ready-Cut laid on ceiling boards. Ceiling linings as in table.

5

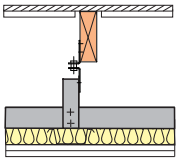

CasoLine MF ceiling suspended beneath **GypFloor SILENT** using Gypframe Acoustic Hangers to give 277mm cavity. 100mm Isover Spacesaver Ready-Cut laid on ceiling boards. Ceiling linings as in table.

Detail	Board type	Ceiling lining thickness mm	Approx. weight kg/m²	Floor depth mm	Sound insulation Airborne R_w (R_w + Ctr) dB	Impact L_{nw} dB	System reference
30 minutes fire resistance BS							
1	SoundBloc	2 x 12.5	23	320	60	60	C106007
2	SoundBloc	2 x 12.5	23	320	63 (51)	57	C106009
3	SoundBloc	2 x 12.5	23	320	63 (55)	54	C106013
4	SoundBloc	2 x 12.5	23	376	66 (54)	50	C106011
60 minutes fire resistance EN BS							
1	SoundBloc	2 x 15	27	325	60	60	C106014
3	FireLine	2 x 12.5	21	320	62 (53)	55	C106022
3	SoundBloc	2 x 15	27	325	63 (55)	54	C106023
4	SoundBloc	2 x 15	27	381	66 (54)	50	C106025
5	SoundBloc	2 x 15	27	336	63 (55)	51	C106026
90 minutes fire resistance BS							
1	FireLine	2 x 15	25	325	59	61	C106004
3	FireLine	2 x 15	25	325	62 (53)	55	C106024

[1] Basic floor construction is 45mm x 195mm timber joists at 600mm centres with 21mm t&g wood chipboard flooring.
[2] 18mm t&g wood chipboard spot bonded to Gyproc Plank on Isover Sound Deadening Floor Slab laid on overlining of 12mm plywood.

NB The fire resistance and sound insulation performances are for imperforate partitions, walls and ceilings incorporating boards with all joints taped and filled, or skimmed according to British Gypsum's recommendations. The quoted performances are achieved only if British Gypsum components are used throughout, and the Company's fixing recommendations are strictly observed. Any variation in the specifications should be checked with British Gypsum.

Table 8 – Sound absorption data for Gyptone boards - tested on a 400mm plenum

QUATTRO 41

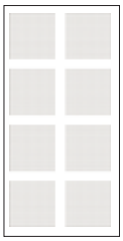

Sound absorption coefficient α_p

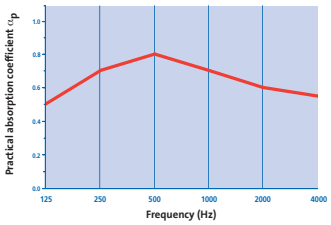

System reference C10A091

Gyptone QUATTRO 41

Practical absorption coefficient αp

125	250	500	1k	2k	4k	α_w	AC[1]	NRC[2]
0.50	0.70	0.80	0.70	0.60	0.55	**0.65**	**C**	**0.70**

QUATTRO 45

Sound absorption coefficient α_p

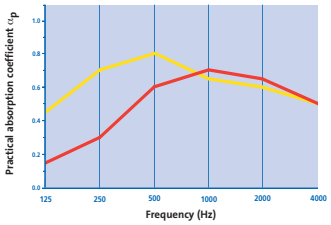

System reference C10A106
C10A107

Gyptone QUATTRO 45

Gyptone QUATTRO 45 plus 50mm Isover APR 1200

Practical absorption coefficient αp

125	250	500	1k	2k	4k	α_w	AC[1]	NRC[2]
0.15	0.30	0.60	0.70	0.65	0.50	**0.60**	**C**	**0.60**
0.40	0.70	0.80	0.80	0.70	0.60	**0.75**	**C**	**0.75**

QUATTRO 46

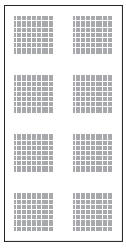

Sound absorption coefficient α_p

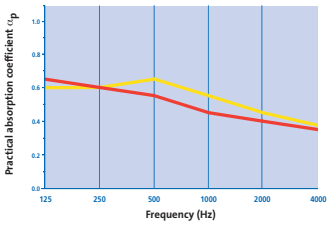

System reference C10A014
C10A015

Gyptone QUATTRO 46

Gyptone QUATTRO 46 plus 100mm Isover Spacesaver Ready-Cut

Practical absorption coefficient αp

125	250	500	1k	2k	4k	α_w	AC[1]	NRC[2]
0.65	0.60	0.55	0.45	0.40	0.35	**0.45(L)**	**D**	**0.50**
0.60	0.60	0.65	0.55	0.45	0.40	**0.50(L)**	**D**	**0.55**

QUATTRO 47

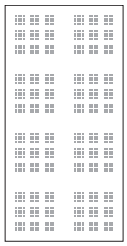

Sound absorption coefficient α_p

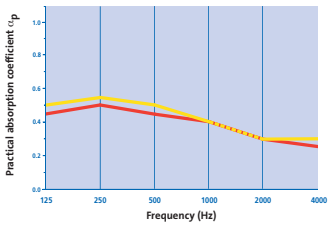

System reference C10A016
C10A017

Gyptone QUATTRO 47

Gyptone QUATTRO 47 plus 50mm Isover APR 1200

Practical absorption coefficient αp

125	250	500	1k	2k	4k	α_w	AC[1]	NRC[2]
0.45	0.50	0.45	0.40	0.30	0.25	**0.35(L)**	**D**	**0.40**
0.50	0.55	0.50	0.40	0.30	0.30	**0.40(L)**	**D**	**0.45**

[1] **AC** – Absorption Class.
[2] **NRC** – Noise Reduction Coefficient.

NB For further information on sound absorption performance of Gyptone boards, refer to British Gypsum **Ceiling Products Acoustic Performance Data** publication, available to download from www.british-gypsum.com

NB All products have been tested to *BS EN 20354* and *ISO 354*. The single figure rating practical sound absorption coefficient α_w is calculated in accordance with *EN ISO 11654*. Suffix letters indicate where performance is limited at either low, medium or high frequencies.

Table 8 (continued) – Sound absorption data for Gyptone boards - tested on a 400mm plenum

LINE 6

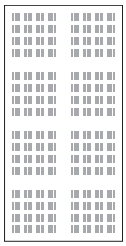

Sound absorption coefficient α_p

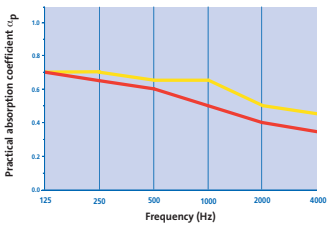

System reference
- C10A001
- C10A002

- Gyptone LINE 6
- Gyptone LINE 6 plus 100mm Isover Spacesaver Ready-Cut

Practical absorption coefficient αp

125	250	500	1k	2k	4k	α_w	AC[1]	NRC[2]
0.70	0.65	0.60	0.50	0.40	0.35	**0.45(L)**	**D**	**0.55**
0.70	0.70	0.65	0.65	0.50	0.45	**0.55(L)**	**D**	**0.65**

LINE 7 Curve

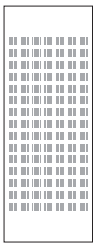

Sound absorption coefficient α_p

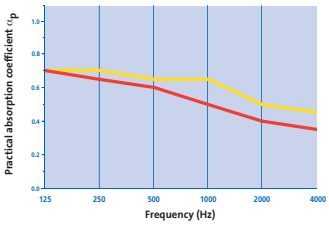

System reference
- C10A018
- C10A019

- Gyptone LINE 7 Curve
- Gyptone LINE 7 Curve plus 100mm Isover Spacesaver Ready-Cut

Practical absorption coefficient αp

125	250	500	1k	2k	4k	α_w	AC[1]	NRC[2]
0.70	0.65	0.60	0.50	0.40	0.35	**0.45(L)**	**D**	**0.55**
0.70	0.70	0.65	0.65	0.50	0.45	**0.55(L)**	**D**	**0.65**

[1] **AC** – Absorption Class.
[2] **NRC** – Noise Reduction Coefficient.

NB For further information on sound absorption performance of Gyptone boards, refer to British Gypsum **Ceiling Products Acoustic Performance Data** publication, available to download from www.british-gypsum.com

NB All products have been tested to *BS EN 20354* and *ISO 354*. The single figure rating practical sound absorption coefficient α_w is calculated in accordance with *EN ISO 11654*. Suffix letters indicate where performance is limited at either low, medium or high frequencies.

Table 9 – Sound absorption data for Rigitone boards

8/18

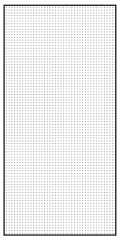

Sound absorption coefficient α_p

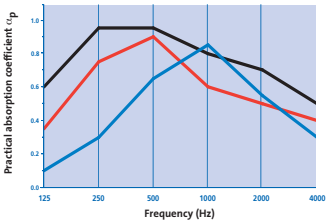

System reference
- C10A036
- C10A037
- C10A060

- Rigitone 8/18 (plenum depth 50mm)
- Rigitone 8/18 (plenum depth 200mm)
- Rigitone 8/18 (plenum depth 200mm plus 50mm Isover Frame Batt 32)

Practical absorption coefficient αp

125	250	500	1k	2k	4k	α_w	AC[1]	NRC[2]
0.10	0.30	0.65	0.85	0.55	0.30	**0.50(M)**	**D**	**0.55**
0.35	0.75	0.90	0.60	0.50	0.40	**0.55(LM)**	**D**	**0.70**
0.60	0.95	0.95	0.80	0.70	0.50	**0.70(LM)**	**C**	**0.85**

10/23

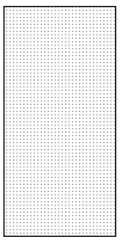

Sound absorption coefficient α_p

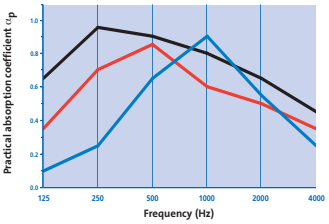

System reference
- C10A038
- C10A039
- C10A061

- Rigitone 10/23 (plenum depth 50mm)
- Rigitone 10/23 (plenum depth 200mm)
- Rigitone 10/23 (plenum depth 200mm plus 50mm Isover Frame Batt 32)

Practical absorption coefficient αp

125	250	500	1k	2k	4k	α_w	AC[1]	NRC[2]
0.10	0.25	0.65	0.90	0.55	0.25	**0.45(M)**	**D**	**0.60**
0.35	0.70	0.85	0.60	0.50	0.35	**0.50(LM)**	**D**	**0.65**
0.65	0.95	0.90	0.80	0.65	0.45	**0.65(LM)**	**C**	**0.85**

15/30

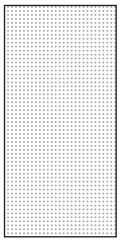

Sound absorption coefficient α_p

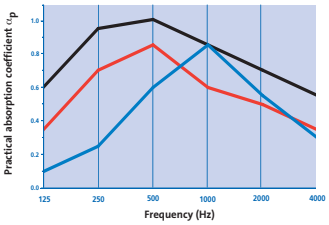

System reference
- C10A040
- C10A041
- C10A062

- Rigitone 15/30 (plenum depth 50mm)
- Rigitone 15/30 (plenum depth 200mm)
- Rigitone 15/30 (plenum depth 200mm plus 50mm Isover Frame Batt 32)

Practical absorption coefficient αp

125	250	500	1k	2k	4k	α_w	AC[1]	NRC[2]
0.10	0.25	0.60	0.85	0.55	0.30	**0.45(M)**	**D**	**0.55**
0.35	0.70	0.85	0.60	0.50	0.35	**0.50(LM)**	**D**	**0.65**
0.60	0.95	1.00	0.85	0.70	0.55	**0.70(LM)**	**C**	**0.85**

[1] **AC** – Absorption Class.
[2] **NRC** – Noise Reduction Coefficient.

NB For further information on sound absorption performance of Gyptone boards, refer to British Gypsum **Ceiling Products Acoustic Performance Data** publication, available to download from www.british-gypsum.com

NB All products have been tested to *BS EN 20354* and *ISO 354*. The single figure rating practical sound absorption coefficient α_w is calculated in accordance with *EN ISO 11654*. Suffix letters indicate where performance is limited at either low, medium or high frequencies.

Table 9 (continued) – Sound absorption data for Rigitone boards

12-20/66

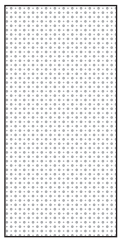

Sound absorption coefficient α_p

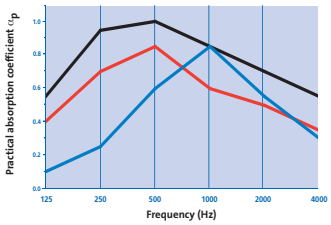

System reference
- C10A042
- C10A043
- C10A063

Rigitone **12-20/66** (plenum depth 50mm)

Rigitone **12-20/66** (plenum depth 200mm)

Rigitone **12-20/66** (plenum depth 200mm plus 50mm Isover Frame Batt 32)

Practical absorption coefficient αp								
125	250	500	1k	2k	4k	α_w	**AC**[1]	**NRC**[2]
0.10	0.25	0.60	0.85	0.55	0.30	**0.45(M)**	**D**	**0.55**
0.40	0.70	0.85	0.60	0.50	0.35	**0.50(LM)**	**D**	**0.65**
0.55	0.95	1.00	0.85	0.70	0.55	**0.70(LM)**	**C**	**0.90**

8-15-20

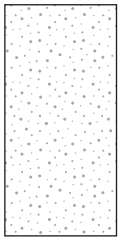

Sound absorption coefficient α_p

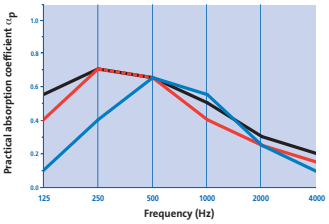

System reference
- C10A056
- C10A057
- C10A068

Rigitone **8-15-20** (plenum depth 50mm)

Rigitone **8-15-20** (plenum depth 200mm)

Rigitone **8-15-20** (plenum depth 200mm plus 50mm Isover Frame Batt 32)

Practical absorption coefficient αp								
125	250	500	1k	2k	4k	α_w	**AC**[1]	**NRC**[2]
0.10	0.40	0.65	0.55	0.25	0.10	**0.25(LM)**	**E**	**0.45**
0.40	0.70	0.65	0.40	0.25	0.15	**0.30(LM)**	**D**	**0.50**
0.55	0.70	0.65	0.50	0.30	0.20	**0.35(LM)**	**D**	**0.55**

8-15-20 SUPER

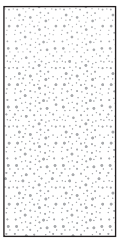

Sound absorption coefficient α_p

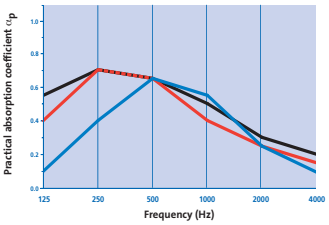

System reference
- C10A058
- C10A059
- C10A069

Rigitone **8-15-20 SUPER** (plenum depth 50mm)

Rigitone **8-15-20 SUPER** (plenum depth 200mm)

Rigitone **8-15-20 SUPER** (plenum depth 200mm plus 50mm Isover Frame Batt 32)

Practical absorption coefficient αp								
125	250	500	1k	2k	4k	α_w	**AC**[1]	**NRC**[2]
0.15	0.40	0.70	0.75	0.45	0.40	**0.50(LM)**	**D**	**0.55**
0.35	0.75	0.75	0.55	0.40	0.30	**0.45(LM)**	**D**	**0.60**
0.60	0.85	0.80	0.65	0.45	0.30	**0.45(LM)**	**D**	**0.70**

[1] **AC** – Absorption Class.
[2] **NRC** – Noise Reduction Coefficient.

NB For further information on sound absorption performance of Gyptone boards, refer to British Gypsum **Ceiling Products Acoustic Performance Data** publication, available to download from www.british-gypsum.com

NB All products have been tested to *BS EN 20354* and *ISO 354*. The single figure rating practical sound absorption coefficient α_w is calculated in accordance with *EN ISO 11654*. Suffix letters indicate where performance is limited at either low, medium or high frequencies.

Design

Cavity barriers
Where cavity barriers are required, these can be formed using Gyproc FireLine or Glasroc F MULTIBOARD screw-fixed to a simple metal or timber frame. The framing should be fixed to the structure to avoid undue loading of the ceiling suspension grid or, alternatively, additional hangers should be incorporated to support the ceiling alongside the cavity barrier.
▶ Refer to **section 10 – Cavity fire barriers**.

Relative humidity
CasoLine MF ceilings lined with Gyproc, Gyptone, Rigitone or British Gypsum specialist boards are suitable for use under normal occupancy conditions. Buildings in which they are used should be dry, glazed and enclosed, with environmental conditions of no greater than 70% RH at 10°C to 20°C. For high humidity / high moisture conditions use Gyproc plasterboard MR variants or Glasroc F MULTIBOARD.

Vapour control
For areas other than where perforated Gyptone or Rigitone boards are used, a face layer of DUPLEX grade plasterboard or two coats of Gyproc Drywall Sealer applied to the face of the lining will provide water vapour control.

Acoustic performance
Gyptone and Rigitone boards are perforated and designed to provide sound absorption when used in conjunction with an airspace behind the ceiling. Increased levels of sound absorption can be achieved by including insulation over the back of the ceiling. Where sound insulation room-to-room is required, sound attenuation (D_{ncw}) of 39 dB can be achieved by the inclusion of 100mm Isover Spacesaver Ready-Cut over the back of the ceiling. Alternatively, other design considerations should be adopted such as extending adjoining partitions into the plenum void or installing a plenum barrier.

Thermal performance
Isover insulation can be laid over the suspension grid to provide the required standard of thermal insulation. Contact the British Gypsum Drywall Academy for further guidance.

Ceiling lift
Changes to Building Regulations Approved Document L, airtightness requirements within dwellings, can lead to greater changes in air pressure when a door is opened. The ceiling is normally the lightest fixed element in the room, and therefore most likely to be affected by this change in pressure.

This can cause the ceiling to lift, which may create a noise. Whilst this noise can be annoying to the occupier, it has no detrimental effect on the performance of the ceiling.

The designer should consider incorporating a pressure release system to minimise the risk of ceiling lift. Where sufficient 'pressure relief' cannot be designed in, it is recommended that the Gypframe MF5 Ceiling Section and the Gypframe MF7 Primary Support Channel should be screw-fixed together using two Gyproc Wafer Head Jack-Point Screws at each intersection, particularly where non-perforated board linings are specified.

Suspension - Gyproc, British Gypsum specialist and Gyptone board linings
Fixing points for suspending the metal grid are required at 1200mm centres in each direction. Suitable fixing devices should be employed when fixing to the structure.

The ceiling grid can be suspended from a concrete soffit using Gypframe MF12 Soffit Cleats and Gypframe MF8 Strap Hanger, or alternatively, Gypframe GA1 Steel Angle. The latter provides a more robust suspension support, which restricts any flexing of the lining when pressure is applied from below. Gypframe GA1 Steel Angle is thus the preferred suspension option when a plaster finish is specified to Gyproc boards. If Gypframe GA1 Steel Angle is used, it is recommended that it is fixed to the soffit via Gypframe MF12 Soffit Cleats.

If fixing Gypframe GA1 Steel Angle direct to the soffit, the angle is cut and bent to fit. For single layer boarding, where Gypframe GA1 Steel Angle is fixed direct, the Gypframe MF7 Primary Support Channel and Gypframe GA1 Steel Angles are fixed at 1200mm centres. For double layer ceilings the Gypframe GA1 Steel Angles are fixed at maximum 1200mm centres, but the Gypframe MF7 Primary Support Channels are closed down to 900mm maximum centres. This will reduce the maximum loads that the grid is capable of supporting by 25%. Furthermore, fixing Gypframe GA1 Steel Angles direct is not suitable if the ceiling is likely to deflect due to varying pressures.

Gypframe Acoustic Hangers can be used to suspend the grid from timber joists to maximise the degree of acoustic isolation (see **Construction details – 7**). In a comparative test a 3 dB improvement in airborne sound insulation and a 6 dB improvement in impact sound insulation were achieved. See **Table 7, Construction details 2** and **4**, relating to double layer Gyproc SoundBloc linings. With concrete floors the high mass of the construction means that high levels of acoustic performance can be achieved when the **CasoLine MF** ceiling is suspended by conventional means, i.e. Gypframe MF8 Strap Hangers or Gypframe GA1 Steel Angle.

Suspension - Rigitone board linings
Gypframe MF7 Primary Support Channels are fixed at 1000mm centres. Fixing points to the structure for the Gypframe MF7 Primary Support Channels are required at 900mm centres.
In addition to this, the Gypframe MF5 Ceiling Section should be installed at nominal 330mm centres.

Partition to suspended ceiling junction
In situations where a **GypWall** metal stud partition passes through a **CasoLine MF** ceiling, which is to both sides of the partition and appropriately fixed to both this partition and perimeter partitions / walls, consideration can be given to the lateral restraint provided by the ceiling when developing the partition specification.

The relevant maximum height is the greater of the floor to **CasoLine MF** ceiling or ceiling to structural soffit height. Care should be taken during installation of tall partitions so as to not adversely affect their performance. Contact the British Gypsum Drywall Academy for further guidance.

Where a **GypWall** metal stud partition is fixed to the framework of a **CasoLine MF** ceiling, in accordance with British Gypsum's installation instructions, the permissible maximum height is equal to that of where it is fixed direct to a structural soffit of the same height.

▶ Please refer to **section 3 - Basic principles of system design** for general guidance

Imposed loads

Tables 11, 12 and 13 provide loading data for the suspension grid for Gyproc, British Gypsum specialist, Gyptone and Rigitone boards respectively. Maximum loads will be reduced by 25% when Gypframe GA1 Steel Angle is fixed directly to the soffit (modified loads are shown in brackets).

Table 10 – Maximum recommended loads on CasoLine MF with Gyproc or British Gypsum specialist board linings [1]

Maximum load including weight of board and any insulation MF5[1] at 450mm centres kg/m²	(modified load)	Suspension point centres mm	MF7[2] channel centres mm
60	(45)	1200	600
40	(30)	1200	900
35	(26)	900	1200
30	(23)	1200	1200

[1] Gypframe MF5 Ceiling Section.

[2] Gypframe MF7 Primary Support Channel.

Table 11 – Maximum recommended loads on CasoLine MF with Gyptone board linings

Maximum load including weight of board and any insulation MF5[1] at 600mm centres kg/m²	(modified load)	Suspension point centres mm	MF7[2] channel centres mm
55	(41)	1200	600
35	(26)	1200	900
25	(19)	1200	1200

[1] Gypframe MF5 Ceiling Section.

[2] Gypframe MF7 Primary Support Channel.

Table 12 – Maximum recommended loads on CasoLine MF with Rigitone board linings

Maximum load including weight of board and any insulation MF5[1] at 330mm centres kg/m²	(modified load)	Suspension point centres mm	MF7[2] channel centres mm
30	(23)	900	1000

[1] Gypframe MF5 Ceiling Section.

[2] Gypframe MF7 Primary Support Channel.

Services

The plenum can be used to route all service requirements including ducting, pipework, electrical cables and conduit. Where light fittings, access panels and similar components are incorporated as part of the design requirements, consideration must be given to maintaining the integrity of the ceiling to meet fire resistance and sound insulation requirements.

Fixtures

Fixings to the system should always be made into the metal grid or to supplementary framing. Some adjustment of the primary grid may be required to support particularly heavy loads, see **Tables 11, 12 and 13**. Where loads outside this range are anticipated, independent suspension should be provided from the structure.

Control joints

Gyproc Control Joints may be required in the ceiling to relieve stresses induced by expansion and contraction of the structure. It is recommended that they coincide with movement joints within the surrounding structure.

Rigitone expansion joints

Rigitone boards should be cut 10mm short of the perimeter wall and should not be fixed to the perimeter channel, see **Construction details – 12 - 13**.

Board finish

Additional care and attention should be exercised when jointing Rigitone boards so as not to fill the perforations and impair the acoustic performance of the finished ceiling.

▶ Refer to **section 13 – Finishing systems and decorative effects**.

Construction details

1 Perimeter parallel to Gypframe MF5 Ceiling Section - screw-fixed

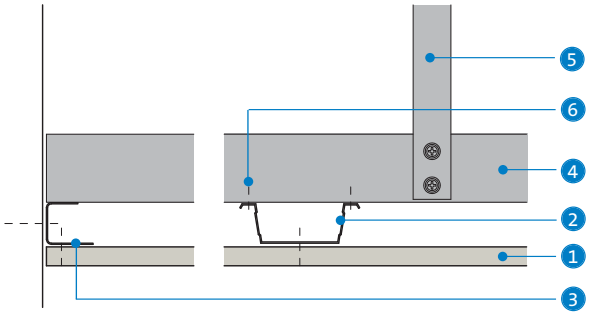

2 Perimeter perpendicular to Gypframe MF5 Ceiling Section - screw-fixed

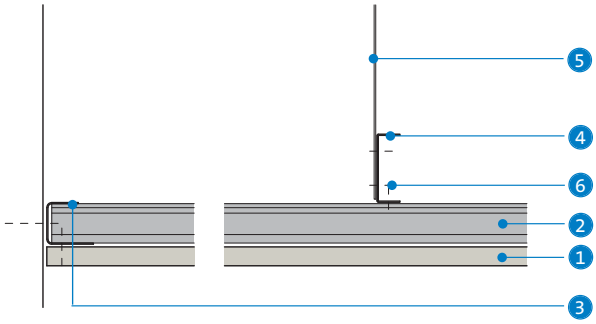

3 Bulkhead - screw-fixed

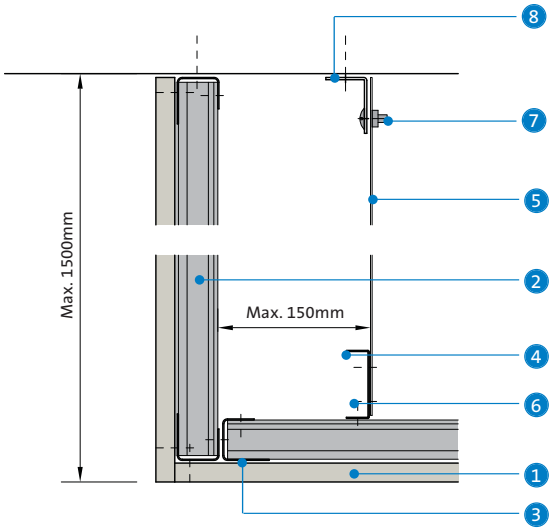

4 Change of level - screw-fixed

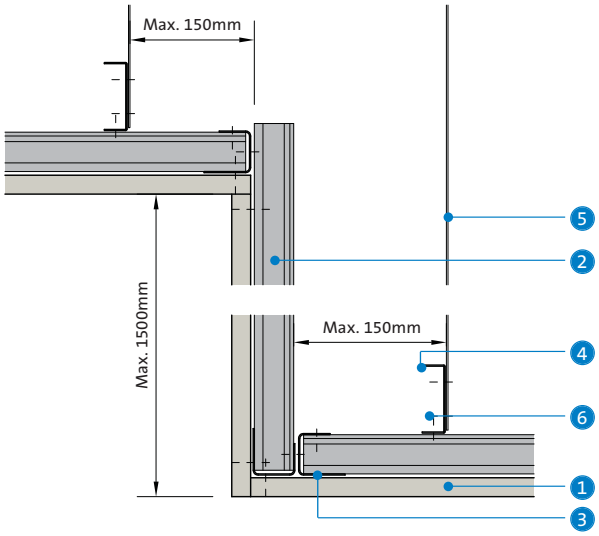

1. Gyproc plasterboard or British Gypsum specialist board
2. Gypframe MF5 Ceiling Section
3. Gypframe MF6 Perimeter Channel
4. Gypframe MF7 Primary Support Channel
5. Gypframe MF8 Strap Hanger or Gypframe GA1 Steel Angle
6. Gyproc Wafer Head Jack-Point Screw
7. Gypframe MF11 Nut and Bolt
8. Gypframe MF12 Soffit Cleat

5 Reflected ceiling plan - single layer

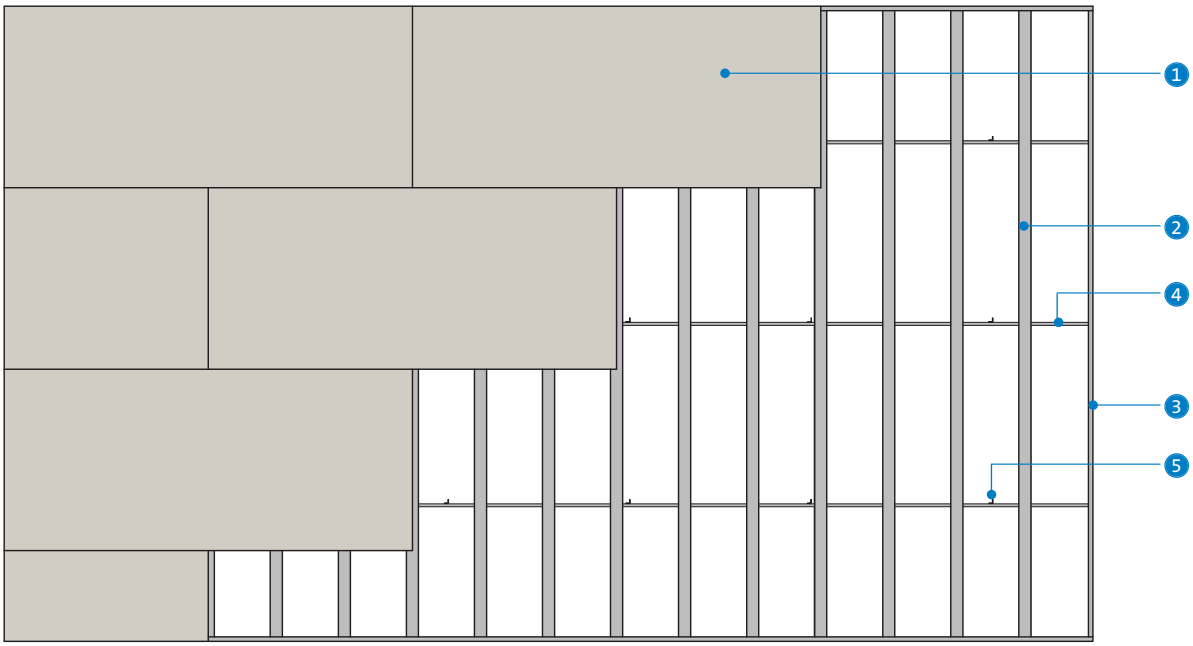

6 Reflected ceiling plan - double layer

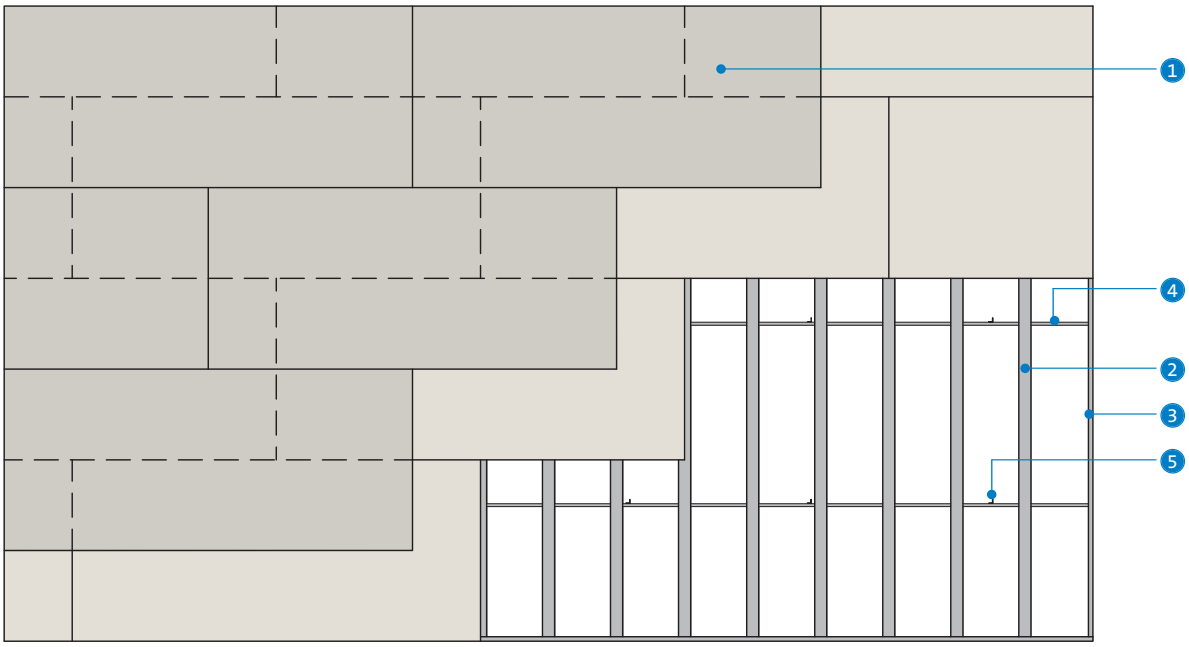

1. Gyproc plasterboard or British Gypsum specialist board
2. Gypframe MF5 Ceiling Section
3. Gypframe MF6 Perimeter Channel
4. Gypframe MF7 Primary Support Channel
5. Gypframe MF8 Strap Hanger or Gypframe GA1 Steel Angle

7 Suspension from timber joist using Gypframe Acoustic Hangers

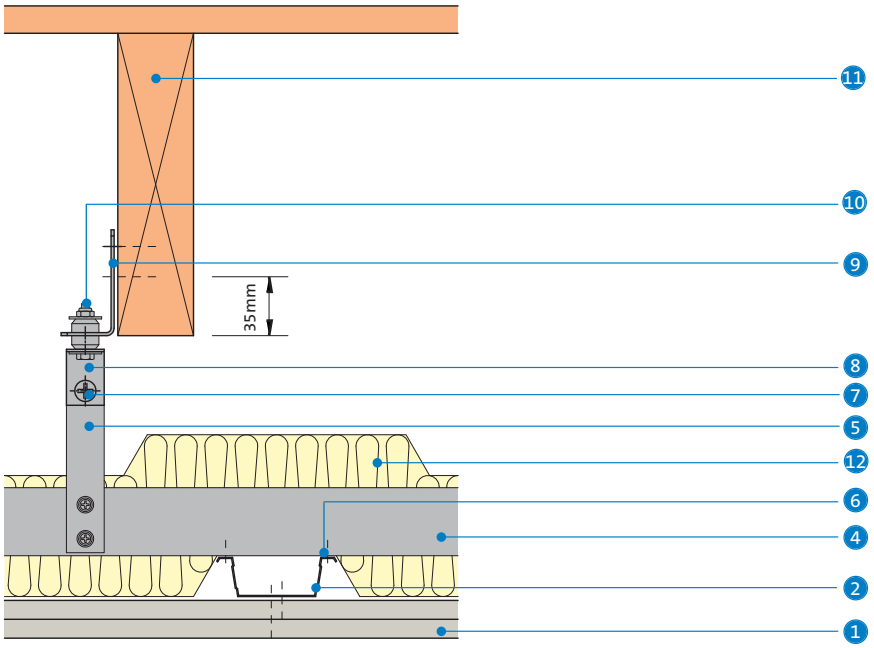

8 Gyproc Profilex Access Panel installation

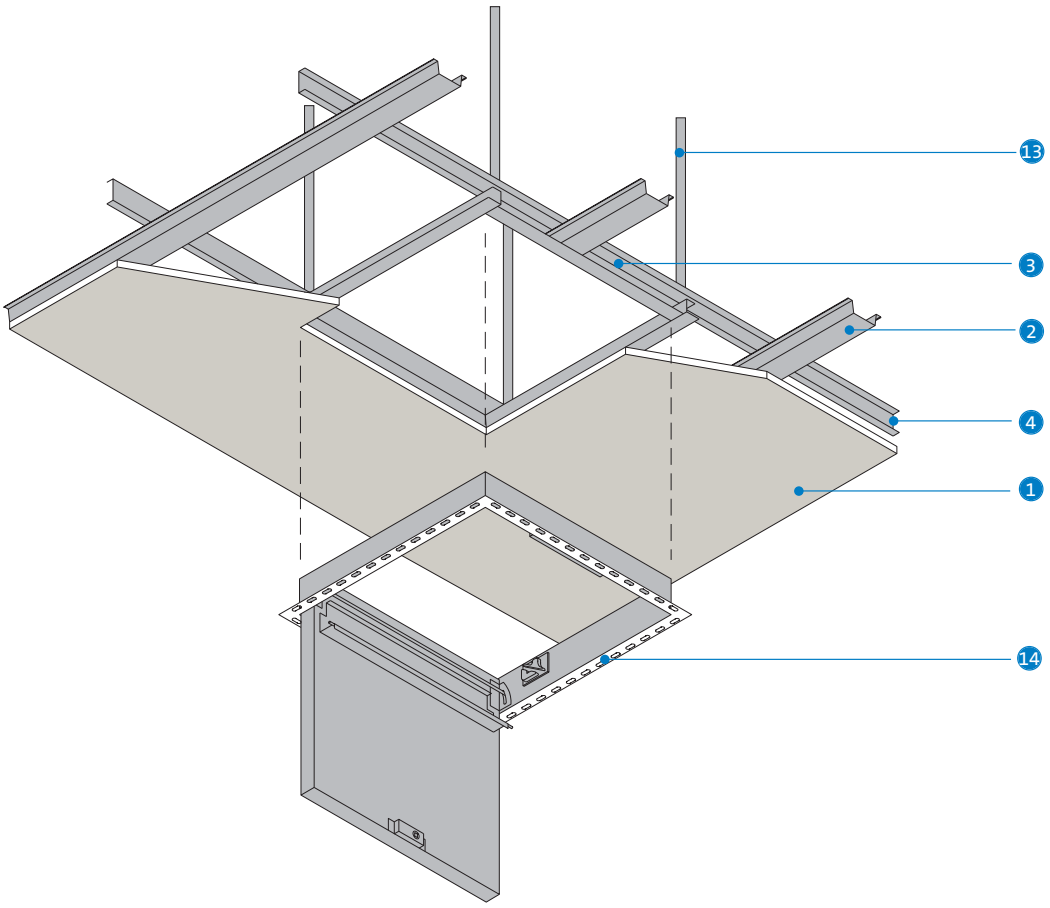

1. Gyproc plasterboard or British Gypsum specialist board
2. Gypframe MF5 Ceiling Section
3. Gypframe MF6 Perimeter Channel
4. Gypframe MF7 Primary Support Channel
5. Gypframe MF8 Strap Hanger or Gypframe GA1 Steel Angle
6. Gyproc Wafer Head Jack-Point Screw
7. Gypframe MF11 Nut and Bolt
8. Gypframe MF12 Soffit Cleat
9. Gypframe Acoustic Hanger fixed with two Gyproc Drywall Timber Screws
10. M6 bolt and locking nut (by others)
11. Timber joist floor
12. Isover insulation
13. Gypframe GA1 Steel Angle
14. Gyproc Profilex Access Panel

9 Perimeter parallel to Gypframe MF5 Ceiling Section - Gyptone

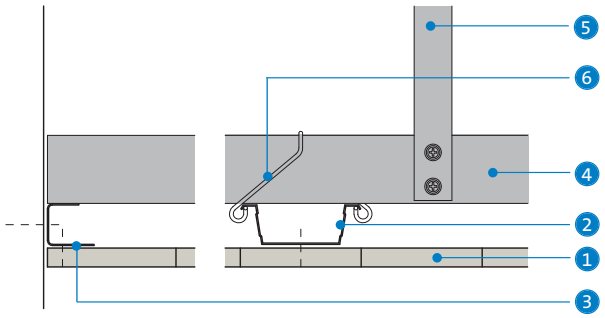

10 Perimeter perpendicular to Gypframe MF5 Ceiling Section - Gyptone

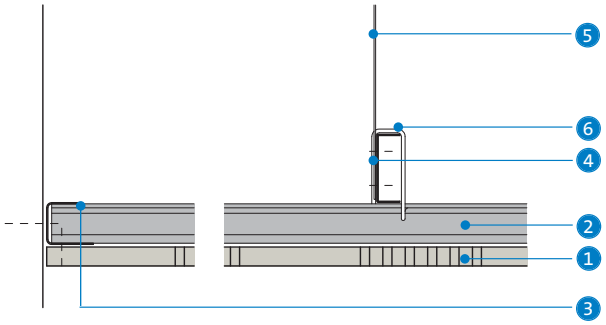

11 Reflected ceiling plan - Gyptone

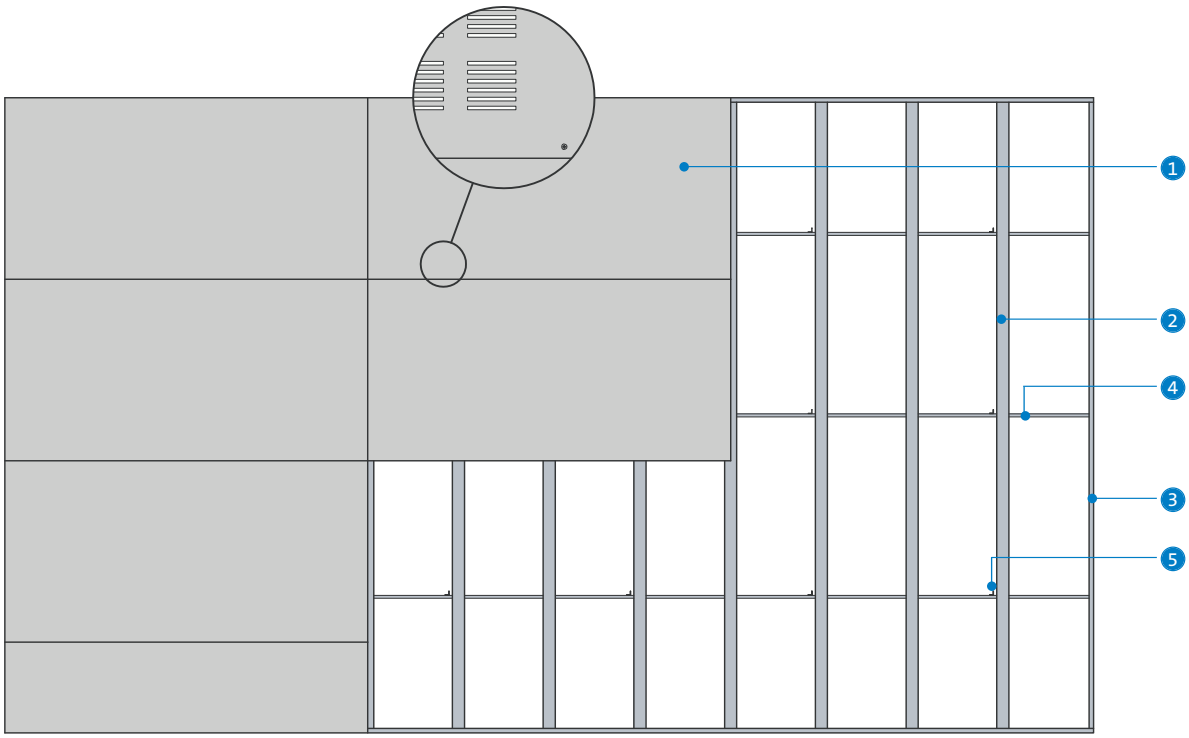

1. Gyptone boards
2. Gypframe MF5 Ceiling Section
3. Gypframe MF6 Perimeter Channel
4. Gypframe MF7 Primary Support Channel
5. Gypframe MF8 Strap Hanger or Gypframe GA1 Steel Angle
6. Gypframe MF9 Connecting Clip

12 Perimeter parallel to Gypframe MF5 Ceiling Section - Rigitone

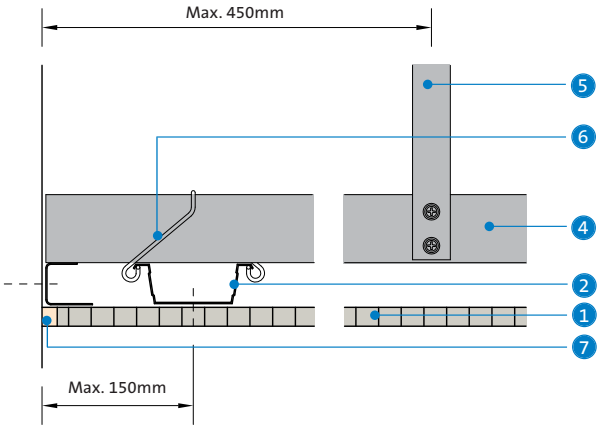

13 Perimeter perpendicular to Gypframe MF5 Ceiling Section - Rigitone

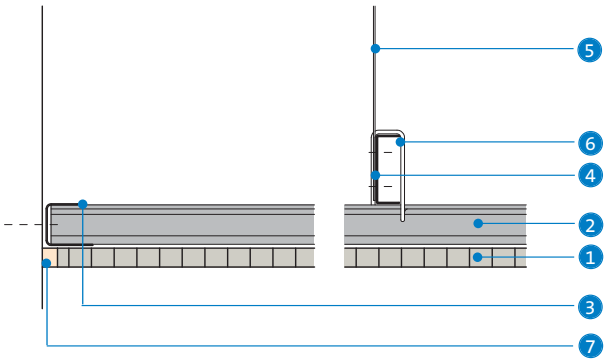

14 Reflected ceiling plan - Rigitone

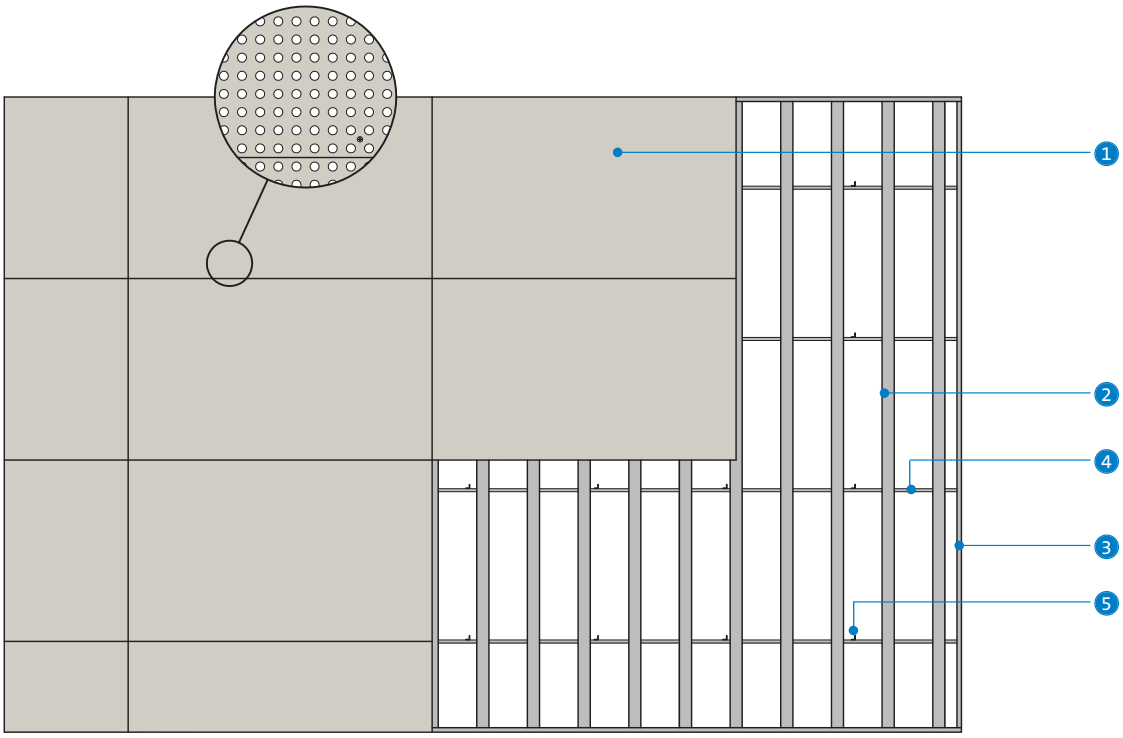

1. Rigitone boards
2. Gypframe MF5 Ceiling Section
3. Gypframe MF6 Perimeter Channel
4. Gypframe MF7 Primary Support Channel
5. Gypframe MF8 Strap Hanger or Gypframe GA1 Steel Angle
6. Gypframe MF9 Connecting Clip
7. Rigitone Vario 60 filler

NB A special procedure is used for fixing and jointing Rigitone boards. Detailed installation notes are given in the current British Gypsum **Ceilings Installation Guide**, available to download from www.british-gypsum.com

CasoLine CURVE

Concealed grid MF curved ceiling system

This section includes updated information, added since it was first published in July 2009. Please see the WHITE BOOK update document for details.
Last updated 05/07/2010

Loughborough
Magistrates Court

CasoLine CURVE

CasoLine CURVE is a lightweight, non-loadbearing, suspended ceiling system for constructing curved ceilings and soffit linings. It can be used in conjunction with British Gypsum perforated and non perforated boards to create convex or concave ceilings to achieve the required radius. The linings are simple to install and provide non fire-rated solutions for all types of buildings.

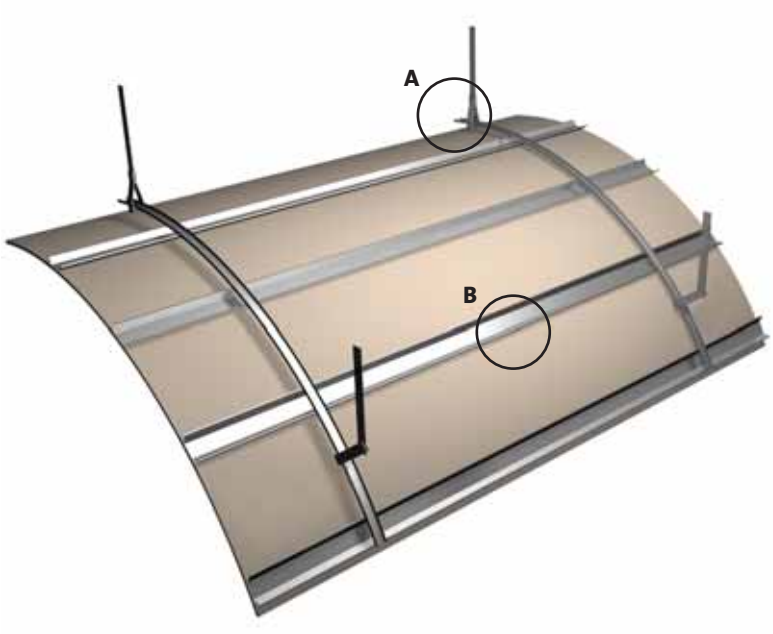

Key facts

- Can be used on concave or convex structures
- Minimum radius 600mm
- Uses pre-formed curved support channel
- No board pre-wetting required
- Normal jointing techniques apply
- Can be used with all Gyptone and Rigitone boards

Applications

A wide range of applications, for example receptions and communal areas.

Sector

- ✓ Office / commercial
- ✓ Education
- ✓ High-rise multi-occupancy
- ✓ Retail
- ✓ Healthcare
- ✓ Auditoria
- ✓ Sport and leisure
- ✓ Apartment buildings

System components

Gypframe metal products

MF5 Ceiling Section
Main support section.
Length
3600mm

MF6 Perimeter Channel
Perimeter support for Gypframe MF5 Ceiling Section.
Length
3600mm

MF7C[1] Curved Support Channel
Primary support for Gypframe MF5 Ceiling Section.
Length
3600mm

MF8 Strap Hanger
Suspension of ceiling grid.
Length
25m coil

GA1 Steel Angle
Suspension of ceiling grid.
Length
2900mm

MF11 Nut and Bolt
Joining hanger to soffit cleat.

MF12 Soffit Cleat
Suspension point from structural soffit.

[1] Supplied pre-formed to radius required and subject to special order. Minimum radius available is 600mm. Channel length for radii between 600mm and 1000mm is reduced to 2000mm.

Board products

Gyproc WallBoard
Thickness 9.5, 12.5, 15mm
Width 900mm

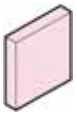

Gyproc FireLine
Thickness 12.5, 15mm
Width 900mm

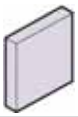

Gyproc SoundBloc
Thickness 12.5, 15mm
Width 1200mm

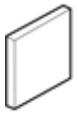

Glasroc F MULTIBOARD
Thickness 6mm
Width 1200mm

Fixing and finishing products

Gyproc Wafer Head Drywall Screws
For metal-to-metal fixing.

Gyproc Wafer Head Jack-Point Screws
For fixing hanger to Gypframe MF7C Curved Support Channel, and for fixing Gypframe MF5 Ceiling Section to Gypframe MF7C Curved Support Channel.

Gyproc Drywall Screws
For fixing boards to stud framing up to 0.79mm thick.

Gyproc Sealant
Sealing air paths for optimum sound insulation.

Gyproc jointing materials
For seamless jointing.

Thistle Board Finish or Thistle Multi-Finish
To provide a plaster skim finish.

Rigitone installation kits
For installation and finishing of Rigitone boards.

Rigitone Vario 60
For jointing of Rigitone boards.

System components (continued)

Gyptone board products

Gyptone QUATTRO 41
Thickness 12.5mm
Length 2400mm
Width 1200mm

Gyptone QUATTRO 45
Thickness 12.5mm
Length 2400mm
Width 900mm

Gyptone QUATTRO 46
Thickness 12.5mm
Length 2400mm
Width 1200mm

Gyptone QUATTRO 47
Thickness 12.5mm
Length 2400mm
Width 1200mm

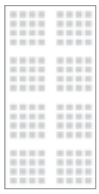

Gyptone LINE 6
Thickness 12.5mm
Length 2400mm
Width 1200mm

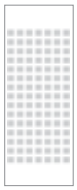

Gyptone LINE 7 Curve
Thickness 6.5mm
Length 2400mm
Width 900mm

Gyptone BASE Curve
Thickness 6.5mm
Length 2400mm
Width 900mm

Rigitone board products

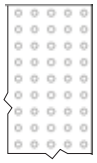

Rigitone 8/18
Thickness 12.5mm
Length 1998mm
Width 1188mm

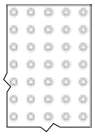

Rigitone 10/23
Thickness 12.5mm
Length 2001mm
Width 1196mm

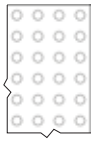

Rigitone 15/30
Thickness 12.5mm
Length 2010mm
Width 1200mm

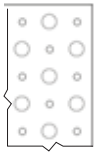

Rigitone 12-20/66
Thickness 12.5mm
Length 1980mm
Width 1188mm

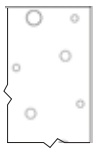

Rigitone 8-15-20
Thickness 12.5mm
Length 2000mm
Width 1200mm

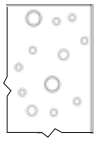

Rigitone 8-15-20 SUPER
Thickness 12.5mm
Length 1960mm
Width 1200mm

Always use genuine branded British Gypsum components to qualify for **SpecSure**® lifetime warranty

Installation overview

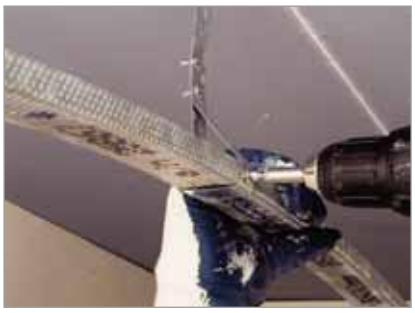

Suspension from concrete soffit
Gypframe MF6 Perimeter Channel is fixed at wall positions to the line of the curve. Timber fillets are installed where required to pack out the channel. Gypframe MF12 Soffit Cleats are secured to the soffit using appropriate fixings. Gypframe MF8 Strap Hanger or Gypframe GA1 Steel Angle hangers are pre-cut and secured to the soffit cleats. Pre-formed Gypframe MF7C Curved Support Channel is installed over the perimeter channels and secured to the hangers. Gypframe MF5 Ceiling Sections are run at right angles to the underside of the pre-formed support channel to form the secondary grid. The ceiling sections are secured to the pre-formed primary channels by screw-fixing. Boards are fixed to the secondary grid to form single or double layer linings to the curvature of the grid. When using Rigitone products please refer to the current British Gypsum **Ceiling Installation Guide,** available to download from www.british-gypsum.com

Suspension from timber joists
The procedure is as for concrete except that soffit cleats are not required. Hangers are twice fixed directly to the side of the joists.

The procedure for installing Gyptone LINE 7 Curve differs from other board options, and additional care is required at the jointing stage to avoid filling perforations with jointing material. Detailed installation notes are given in the current British Gypsum **Ceilings Installation Guide**, available to download from www.british-gypsum.com

▶ Refer to **section 8 – Floor, ceiling and soffit systems, CasoLine MF** for additional information.

For full installation details, refer to the British Gypsum **SITE** BOOK, available to download from www.british-gypsum.com

For full installation details, refer to the British Gypsum **SITE BOOK**, available to download from www.british-gypsum.com

Design

Planning - key factors

Gypframe MF7C Curved Support Channel is supplied pre-formed to the radius required. Board joints should be avoided on the apex of the curve for the exposed layer of board. Gypframe MF5 Ceiling Section positions should therefore be pre-determined at the design stage.

Degree of curvature

In common with other sheet materials, board-ends have a tendency to remain straight, and so the minimum achievable radius will be influenced by the board characteristics, the length of curve, the support centres, and the occurrence of board joints. See **Table 1**.

Board finishing

▶ Refer to **section 13 – Finishing systems and decorative effects**.

NB Whilst a good quality finish can be achieved using normal jointing techniques, a plaster skim finish may be considered (with the exception of Gyptone and Rigitone boards), particularly where there are a number of butt-end joints on the curve.

Table 1 - Minimum radii and framing centres

Board type	Thickness mm	Minimum radius[1] mm	MF5[3] centres mm	Span (suspension points) of MF7C[4] mm	MF7C[4] centres mm
Glasroc F MULTIBOARD	6	600	300	900	1200
	12 (2 x 6)	600	300	600	1200
Gyptone QUATTRO 41	12.5	6000	300	900	1200
Gyptone QUATTRO 45	12.5	6000	300	900	1200
Gyptone QUATTRO 46	12.5	6000	300	900	1200
Gyptone QUATTRO 47	12.5	6000	300	900	1200
Gyptone LINE 6	12.5	6000	300	900	1200
Gyptone LINE 7 Curve	6.5	1200	300	900	1200
Gyptone BASE Curve[2]	6.5	1200	300	900	1200
Rigitone boards (all)	12.5	5000	330	900	1000
Gyproc WallBoard	9.5	1800	300	750	1200
	12.5	3600	300	600	1200
	15	4800	300	600	1200
Gyproc SoundBloc	12.5	2900	300	600	1200
	15	3600	300	600	1200
Gyproc FireLine	12.5	4800	300	600	1200

[1] Concave or convex.
[2] Gyptone BASE Curve board is used in conjuction with Gyptone LINE 7 Curve to create non-perforated areas, e.g. around perimeters.
[3] Gypframe MF5 Ceiling Section.
[4] Gypframe MF7C Curved Support Channel.

NB It is not possible to bend Rigidur H board.

▶ Please refer to **section 3 - Basic principles of system design** for general guidance

Construction details

1 Gypframe MF6 Perimeter Channel cut and fixed to line of curve at perimeter

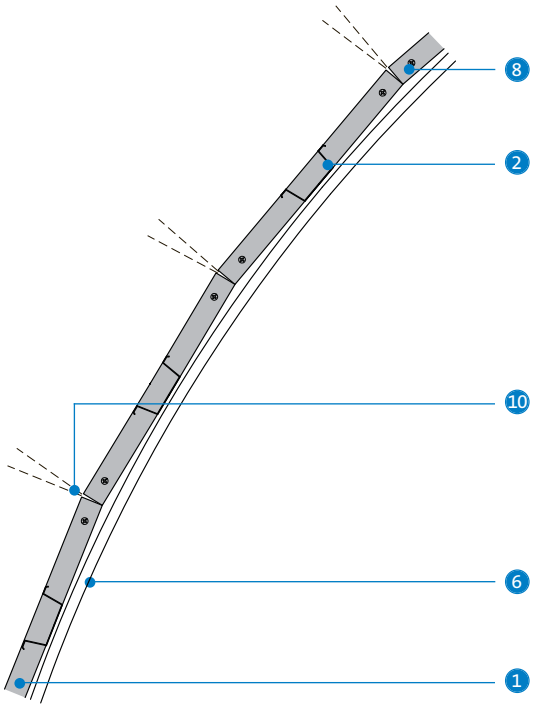

2 Wall junction

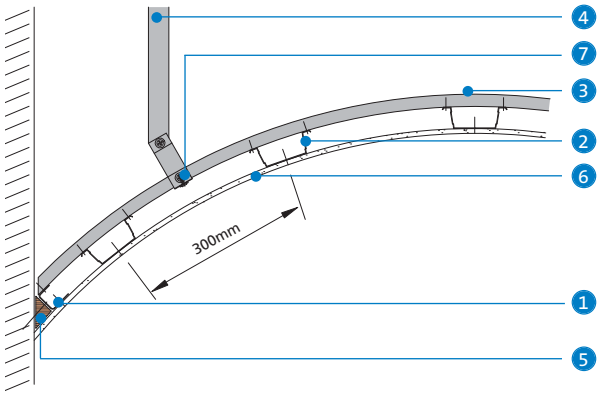

3 Hanger - Gypframe MF7C Curved Support Channel connection using strap

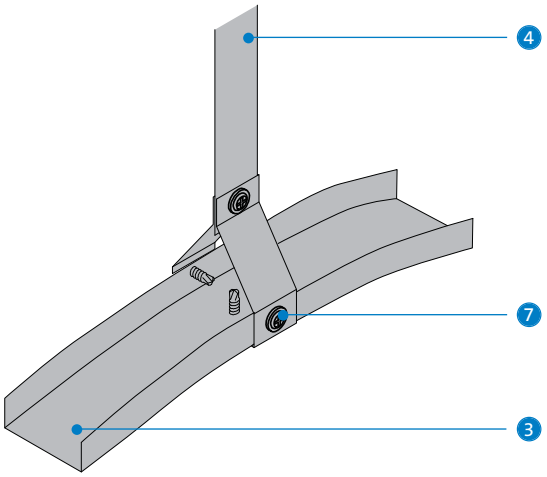

4 Alternative hanger - Gypframe MF7C Curved Support Channel connection using Gypframe GA1 Steel Angle

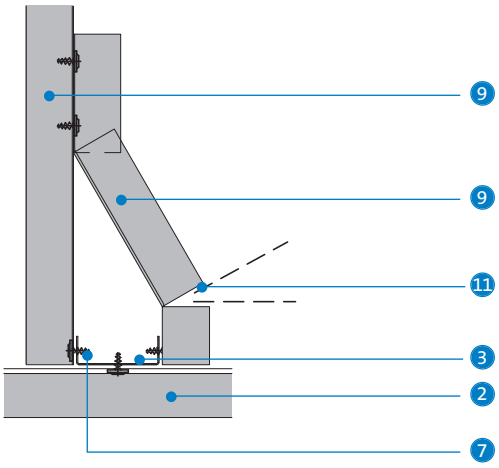

1. Gypframe MF6 Perimeter Channel
2. Gypframe MF5 Ceiling Section
3. Gypframe MF7C Curved Support Channel
4. Gypframe MF8 Strap Hanger
5. Timber fillet
6. Lining board
7. Gyproc Wafer Head Jack-Point Screw
8. Fixing to structure
9. Gypframe GA1 Steel Angle
10. Gypframe MF6 Perimeter Channel, cut and bent to required curve
11. Gypframe GA1 Steel Angle, cut and bent

Construction details

5 Methods of joining Gypframe MF7C Curved Support Channels

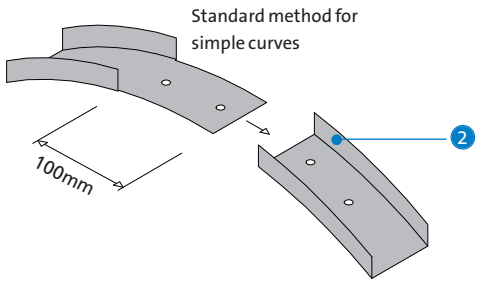

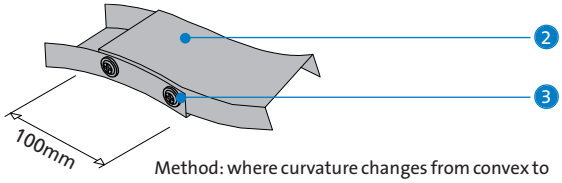

Method: where curvature changes from convex to concave an additional hanger is required.

6 Concave curvature

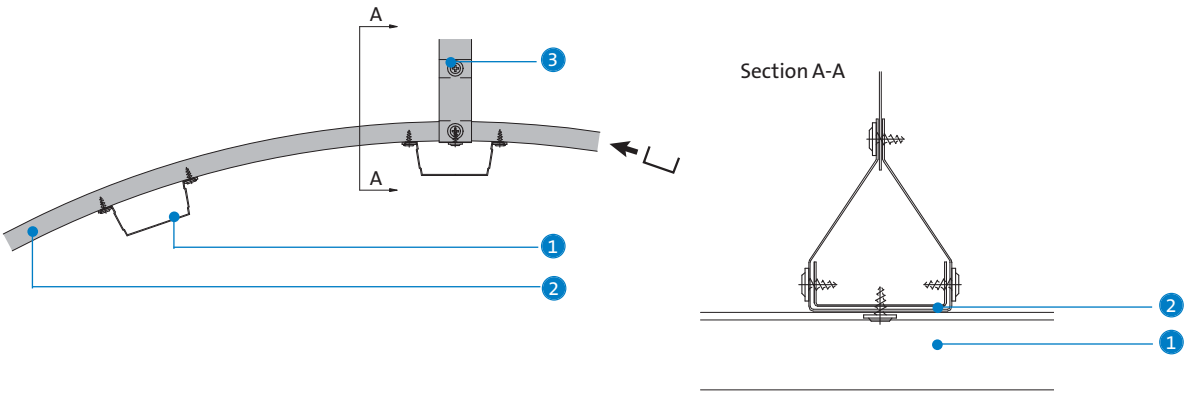

7 Convex curvature

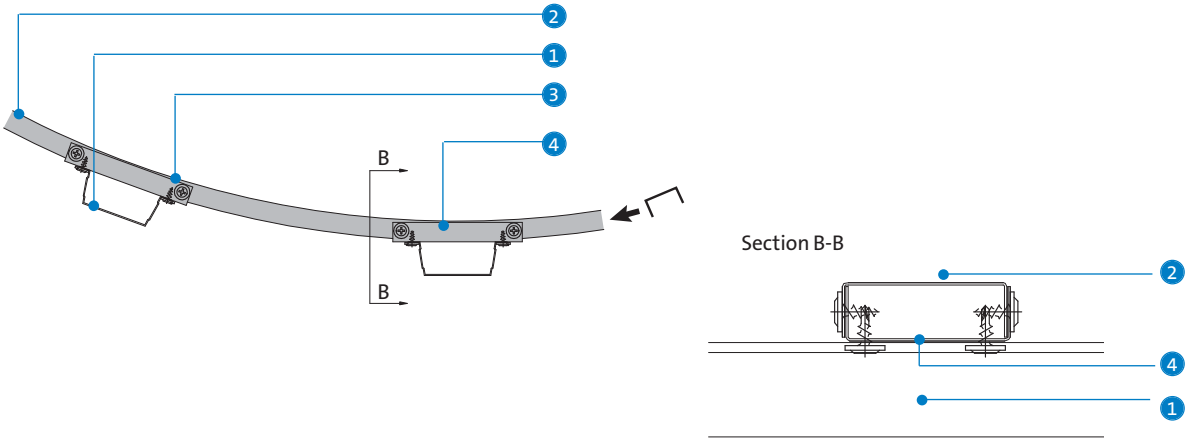

1. Gypframe MF5 Ceiling Section
2. Gypframe MF7C Curved Support Channel
3. Gyproc Wafer Head Jack-Point Screw
4. Small section of Gypframe MF7 Primary Support Channel fixed to bridge the Gypframe MF7C Curved Support Channel flanges to provide a flat, positive fixing for the Gypframe MF5 Ceiling Section positions

GypLyner UNIVERSAL

Concealed grid ceiling lining system

This section includes updated information, added since it was first published in July 2009. Please see the WHITE BOOK update document for details.
Last updated 21/01/2011

Grosvenor House Hotel,
Mayfair, London

GypLyner UNIVERSAL

52 – 63 R_w dB Airborne | 66 – 55 L_{nw} dB Impact | 30 – 90 mins

GypLyner UNIVERSAL ceiling is a general purpose ceiling lining system suitable for most internal applications. It is used in all types of buildings from residential properties to large commercial developments, and is equally suited to both new-build and refurbishment.

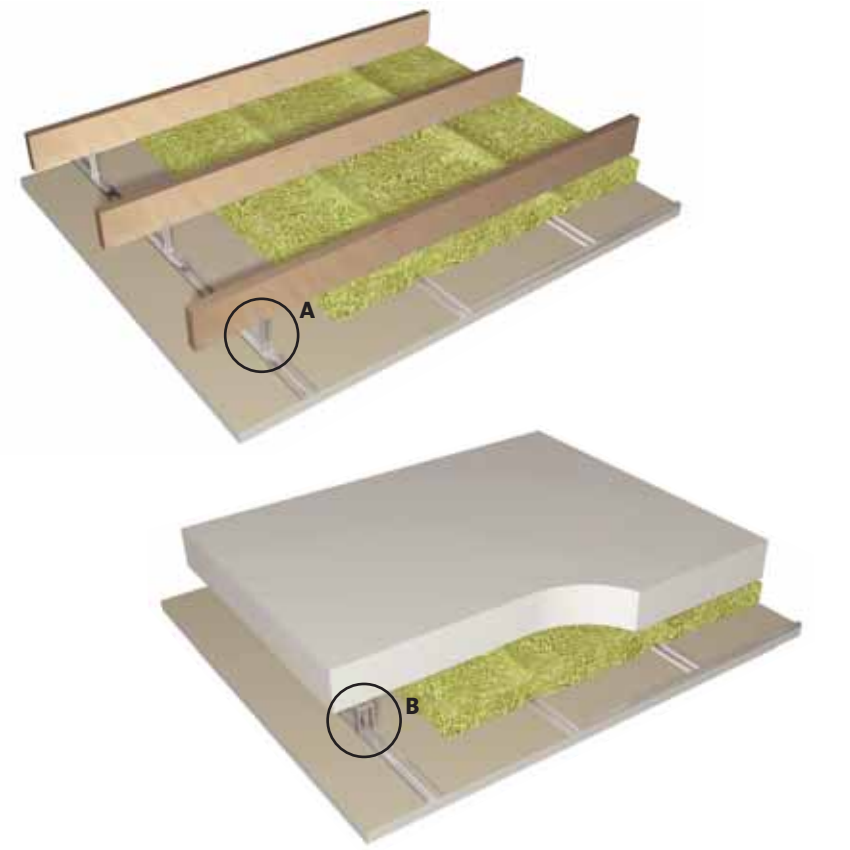

A
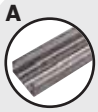
Gypframe GL1 Lining Channel +

Gypframe GL5 / GL6 Timber Connector

B
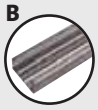
Gypframe GL1 Lining Channel +

Gypframe GL2 / GL9 / GL12 Bracket

Key facts

- General purpose ceiling lining
- Suitable for concrete soffits or timber joists
- Stand-off can be adjusted from 25mm to 175mm
- Same components as ceiling and wall linings
- Ceiling void accommodates small service routings

Applications

Due to the design flexibility of GypLyner UNIVERSAL, this system can be tailored to meet the requirements of a wide range of applications.

Sector

- ✓ Office / commercial
- ✓ Education
- ✓ Apartment buildings
- ✓ Retail
- ✓ Healthcare
- ✓ High-rise multi-occupancy
- ✓ Sport and leisure
- ✓ Auditoria

System components

Gypframe metal products

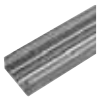

GL1 Lining Channel

Length
2400, 2700mm
3000, 3600mm

GL2 Bracket
Maximum 75mm drop.

Length
195mm

GL9 Bracket
For maximum 125mm drop.

Length
295mm

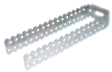

GL12 Bracket
For maximum 175mm drop.

Length
395mm

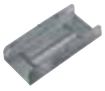

GL3 Channel Connector
For joining Gypframe GL1 Lining Channels.

GL5 Timber Connector
Maximum 35mm drop.

Length
70mm

GL6 Timber Connector
Maximum 120mm drop.

Length
170mm

GL8 Track

Length
3600mm

Board products

Gyproc WallBoard[1]
Thickness 12.5, 15mm
Width 900, 1200mm

Gyproc SoundBloc
Thickness 12.5, 15mm
Width 1200mm

Gyproc FireLine
Thickness 12.5[1], 15mm
Width 900, 1200mm

Gyproc Plank
Thickness 19mm
Width 600mm

Glasroc F MULTIBOARD
Thickness 12.5mm
Width 1200mm

[1] Also available in DUPLEX grades where vapour control is required.

Fixing and finishing products

Gyproc Wafer Head Drywall Screws
For Gypframe metal-to-metal fixing less than 0.8mm thick ('I' studs less than 0.6mm thick).

Gypframe GL11 GypLyner Anchors
For fixing Gypframe GL2, GL9 or GL12 Brackets to concrete / masonry.

Gyproc Drywall Screws
For fixing boards to metal framing and brackets to timber supports.

Gyproc Sealant
Sealing air paths for optimum sound insulation.

Gyproc jointing materials
For seamless jointing.

Thistle Board Finish or Thistle Multi-Finish
To provide a plaster skim finish.

Insulation products

Isover Spacesaver Ready-Cut
100mm, to achieve acoustic performance.

or

Isover APR 1200
50mm, to achieve acoustic performance.

Installation overview - Fixing to a concrete soffit

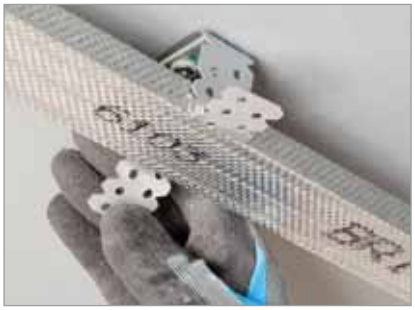

Gypframe GL8 Track is fixed at the perimeter with the longer leg at the bottom. Gypframe GL2, GL9 or GL12 Brackets are fixed at the required centres. Gypframe GL1 Lining Channel is located into the perimeter track and each leg of the Gypframe GL2, GL9 or GL12 Bracket is screw-fixed to the Gypframe GL1 Lining Channel. The protruding legs of each bracket are bent to sit back from the channel face.

Gypframe GL1 Lining Channel sections are joined using Gypframe GL3 Channel Connectors. Additional channel or supplementary framing is installed if required to support fixtures. Boards are fixed to the Gypframe GL1 Lining Channels to form one or two layer linings as specified.

Installation overview - Fixing to timber joists

Gypframe GL5 or GL6 Timber Connectors are fixed to the side of joists using Gyproc Drywall Screws. The connectors must be aligned accurately since they can not be adjusted once Gypframe GL1 Lining Channel is engaged into a row of timber connectors and twisted into position.

The channels are located into Gypframe GL8 Track at the perimeter. Gypframe GL1 Lining Channel sections are joined using Gypframe GL3 Channel Connectors.

Additional channel or supplementary framing is installed if required to support fixtures. Boards are fixed to the Gypframe GL1 Lining Channels to form one or two layer linings as specified.

Installation overview - Fixing to an existing ceiling

If the existing ceiling is to be retained, Gypframe GL6 Timber Connectors can be bent to form a right-angle and fixed to joists through the retained ceiling with suitable fixings. Each connector is bent at a position between the third and fourth holes along to give a 30mm horizontal leg. Gypframe GL1 Lining Channels are located and boards fixed through to form the new ceiling.

Alternatively, fix Gypframe GL2, GL9 or GL12 Brackets to joists through the retained ceiling with suitable fixings. Gypframe GL1 Lining Channels are fixed to brackets following the method described in **'Fixing to a concrete soffit'**.

For full installation details, refer to the British Gypsum **SITE** BOOK, available to download from www.british-gypsum.com

For full installation details, refer to the British Gypsum **SITE BOOK**, available to download from www.british-gypsum.com

Performance (▶ Refer to **section 3 - Basic principles of system design**)

EN

Table 1 – GypLyner UNIVERSAL fixing to new or existing solid timber joist floors
Solutions to satisfy the requirements of *BS EN 1365-2: 2000*

1

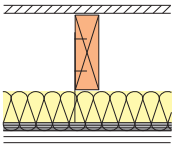

21mm t&g flooring over 38mm x 195mm (minimum) timber joists at 600mm (maximum) centres. **GypLyner UNIVERSAL** ceiling fixed to underside of joists with Gypframe GL1 Lining Channels at 450mm maximum centres. 100mm Isover Spacesaver Ready-Cut in the cavity. Ceiling linings as in table. 100% loadbearing ratio.

Detail	Board type	Lining thickness mm	Sound insulation Airborne R_w dB	Sound insulation Impact L_{nw} dB	System reference
60 minutes fire resistance EN					
1	SoundBloc	2 x 15	54	65	C106020
1	Plank + FireLine	19 + 12.5	54	65	C106021

NB The fire resistance and sound insulation performances are for imperforate partitions, walls and ceilings incorporating boards with all joints taped and filled, or skimmed according to British Gypsum's recommendations. The quoted performances are achieved only if British Gypsum components are used throughout, and the Company's fixing recommendations are strictly observed. Any variation in the specifications should be checked with British Gypsum.

NB If preferred, the existing ceiling can be retained. The new **GypLyner UNIVERSAL** ceiling is installed with Gypframe GL6 Timber Connectors or Gypframe GL2, GL9 or GL12 Brackets, fixed through the existing ceiling into the joists.

NBS work section K10 - Plasterboard drylinings / partitions / ceilings; K11 - Rigid sheet flooring / sheathing / sarking / decking / linings / castings; K20 - Timberboard floorings / sarking / linings / castings

BS Table 2 – GypLyner UNIVERSAL upgrading existing solid timber joist floors - ceiling retained
Solutions to satisfy the requirements of *BS 476: Part 21: 1987*

1

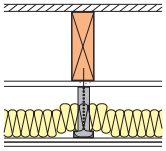

18mm flooring grade chipboard and existing ceiling of 9.5mm Gyproc WallBoard. **GypLyner UNIVERSAL** ceiling[1] suspended with Gypframe GL1 Lining Channels at 450mm maximum centres to give a minimum cavity of 50mm to a maximum of 145mm. 50mm Isover APR 1200 in the cavity. Ceiling linings as in table. 100% loadbearing ratio.

2

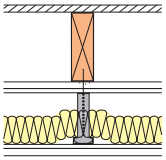

18mm flooring grade chipboard and ceiling of Gyproc Plank and 12.5mm Gyproc WallBoard to simulate a wood lath and plaster ceiling[2]. **GypLyner UNIVERSAL** ceiling[1] suspended with Gypframe GL1 Lining Channels at 450mm maximum centres to give a minimum cavity of 50mm to a maximum of 145mm. 50mm Isover APR 1200 in the cavity. Ceiling linings as in table. 100% loadbearing ratio.

Detail	Board type	Lining thickness mm	Joist centres mm	Joist size mm	Sound insulation Airborne R_w dB	Sound insulation Impact L_{nw} dB	System reference
30 minutes fire resistance BS							
2	FireLine	1 x 12.5	450	195 x 45	53	64	C154003
60 minutes fire resistance BS							
1	FireLine	2 x 12.5	450	195 x 45	56	62	C154005
2	FireLine	2 x 12.5	450	195 x 45	59	59	C154006

[1] Gypframe GL6 Timber Connectors are bent at a position between the third and fourth holes along (forming a 30mm horizontal leg) to form a right angle, and fixed through the existing ceiling with suitable fixings. Alternatively, use Gypframe GL2, GL9 or GL12 Brackets.
[2] Existing lath and plaster ceiling (up to 20mm thick) should be supported by chicken wire, securely fixed to the joists.

NB The fire resistance and sound insulation performances are for imperforate partitions, walls and ceilings incorporating boards with all joints taped and filled, or skimmed according to British Gypsum's recommendations. The quoted performances are achieved only if British Gypsum components are used throughout, and the Company's fixing recommendations are strictly observed. Any variation in the specifications should be checked with British Gypsum.

Performance (▶ Refer to **section 3 - Basic principles of system design**)

BS

Table 3 – GypLyner UNIVERSAL upgrading existing solid timber joist floors - ceiling replaced
Solutions to satisfy the requirements of *BS 476: Part 21: 1987*

1

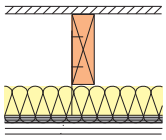

Existing floor retained. Existing wood lath and plaster ceiling removed. **GypLyner UNIVERSAL** ceiling suspended with Gypframe GL1 Lining Channels at 450mm maximum centres. 100mm Isover Spacesaver Ready-Cut in the cavity. Ceiling linings as in table. 100% loadbearing ratio.

2

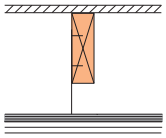

Existing floor retained. **GypLyner UNIVERSAL** ceiling suspended with Gypframe GL1 Lining Channels at 450mm maximum centres. Ceiling linings as in table. 100% loadbearing ratio.

Detail	Board type	Lining thickness mm	Joist centres mm	Joist size mm	Sound insulation Airborne R_w dB	Sound insulation Impact L_{nw} dB	System reference
30 minutes fire resistance BS							
1	SoundBloc	2 x 12.5	450	200 x 50	54	65	C154004
60 minutes fire resistance BS							
1	FireLine	2 x 12.5	450	195 x 45	53	66	C154007
1	Plank + WallBoard	19 + 12.5	600	195 x 45	52	66	C206004
2	Glasroc F MULTIBOARD	1 x 12.5	600	200 x 44	–	–	G106030
90 minutes fire resistance BS							
2	Glasroc F MULTIBOARD	2 x 12.5	600	200 x 50	–	–	G106033

NB The fire resistance and sound insulation performances are for imperforate partitions, walls and ceilings incorporating boards with all joints taped and filled, or skimmed according to British Gypsum's recommendations. The quoted performances are achieved only if British Gypsum components are used throughout, and the Company's fixing recommendations are strictly observed. Any variation in the specifications should be checked with British Gypsum.

NBS work section K10 - Plasterboard drylinings / partitions / ceilings; K11 - Rigid sheet flooring / sheathing / sarking / decking / linings / castings; K20 - Timberboard floorings / sarking / linings / castings

Table 4 – GypLyner UNIVERSAL upgrading existing solid timber joist floors
Solutions to satisfy the requirements of *BS 476: Part 21: 1987*

1

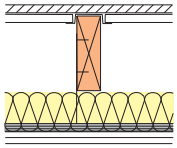

GypFloor SILENT comprising of 21mm softwood floor boarding with Gyproc Plank on Gypframe SIF Floor Channels. **GypLyner UNIVERSAL** ceiling suspended with Gypframe GL1 Lining Channels at 450mm maximum centres. 100mm Isover Spacesaver Ready-Cut in the cavity. Ceiling linings as in table. 100% loadbearing ratio.

Detail	Board type	Lining thickness mm	Joist centres mm	Joist size mm	Sound insulation Airborne R_w (R_w + Ctr) dB	Sound insulation Impact L_{nw} dB	System reference
60 minutes fire resistance BS							
1	Plank + SoundBloc	19 + 12.5	450	200 x 50	63 (50)	55	C154008

NB The fire resistance and sound insulation performances are for imperforate partitions, walls and ceilings incorporating boards with all joints taped and filled, or skimmed according to British Gypsum's recommendations. The quoted performances are achieved only if British Gypsum components are used throughout, and the Company's fixing recommendations are strictly observed. Any variation in the specifications should be checked with British Gypsum.

Design

Planning - key factors
The depth of the ceiling cavity is determined by the positioning of the fixing brackets. For concrete soffits the fixing brackets allow sufficient adjustment for levelling the ceiling. When using Gypframe GL2 Brackets, allow for a stand-off of 25mm – 75mm plus the lining thickness. When using Gypframe GL9 Brackets, allow for a stand-off of 25mm – 125mm plus the lining thickness. When using Gypframe GL12 Brackets, allow for a stand-off of 25mm – 175mm plus the lining thickness. When fixing to timber joists using Gypframe GL5 or GL6 Timber Connectors, allow for a maximum cavity depth of 35mm and 120mm respectively, measured from the bottom of the joists to the underside of the lining.

Cavity barriers
Where cavity barriers are required these can be formed using Gyproc FireLine or Glasroc F MULTIBOARD screw-fixed to a simple metal frame. The framing should be fixed to the structure to avoid undue loading of the ceiling suspension system.
▶ Refer to **section 10 – Cavity fire barriers**.

Fixing to the structure
When lining concrete soffits, fixing brackets should be positioned equidistant at up to 1200mm maximum centres. Gypframe GL11 GypLyner Anchors are suitable for fixing brackets to solid concrete or masonry backgrounds. When fixing to hollow backgrounds proprietary fixings will be necessary.

When lining timber joists, Gypframe GL5 or GL6 Timber Connectors should be fixed to the joists to support the channels at maximum 1200mm centres for single layer boarding, and maximum 600mm centres for double layer boarding.

Services
The cavity above the metal framework facilitates the incorporation of services. Pipes and conduits should be fixed in position before installing the framing. Where light fittings, access panels and similar components are incorporated as part of the design requirements, consideration must be given to maintaining the integrity of the ceiling to meet fire resistance and sound insulation requirements.
▶ Refer to **section 3.5 – Service installations**.

Fixtures
Fixtures with a maximum weight of 3kg, e.g. single lights, can be fixed into the channels. For other fixtures, independent suspension should be provided from the structure.

Board finishing
▶ Refer to **section 13 – Finishing systems and decorative effects**.

▶ Please refer to **section 3 - Basic principles of system design** for general guidance

Construction details

1 Perimeter parallel to Gypframe GL1 Lining Channel for concrete soffit

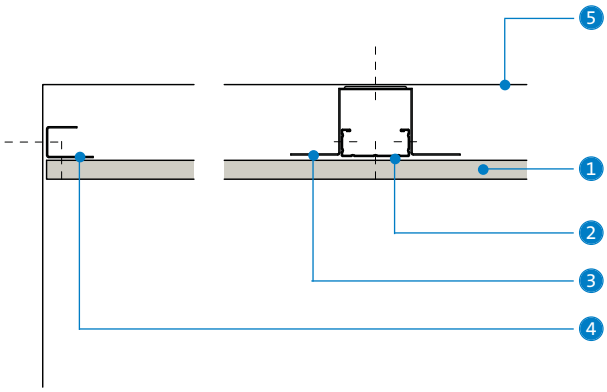

2 Perimeter perpendicular to Gypframe GL1 Lining Channel for concrete soffit

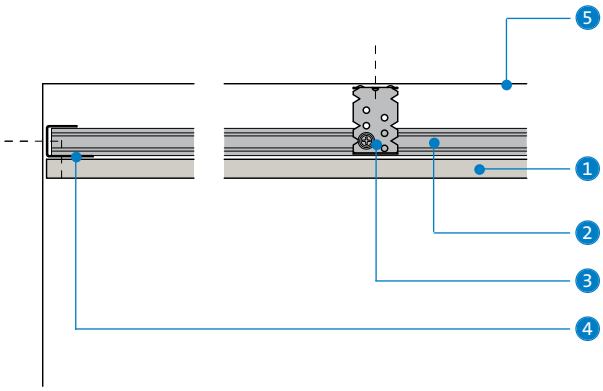

3 Reflected ceiling plan for concrete soffit - single layer 15mm Gyproc plasterboard with channels at 600mm maximum centres (or 12.5mm Gyproc plasterboard with channels at 450mm maximum centres)

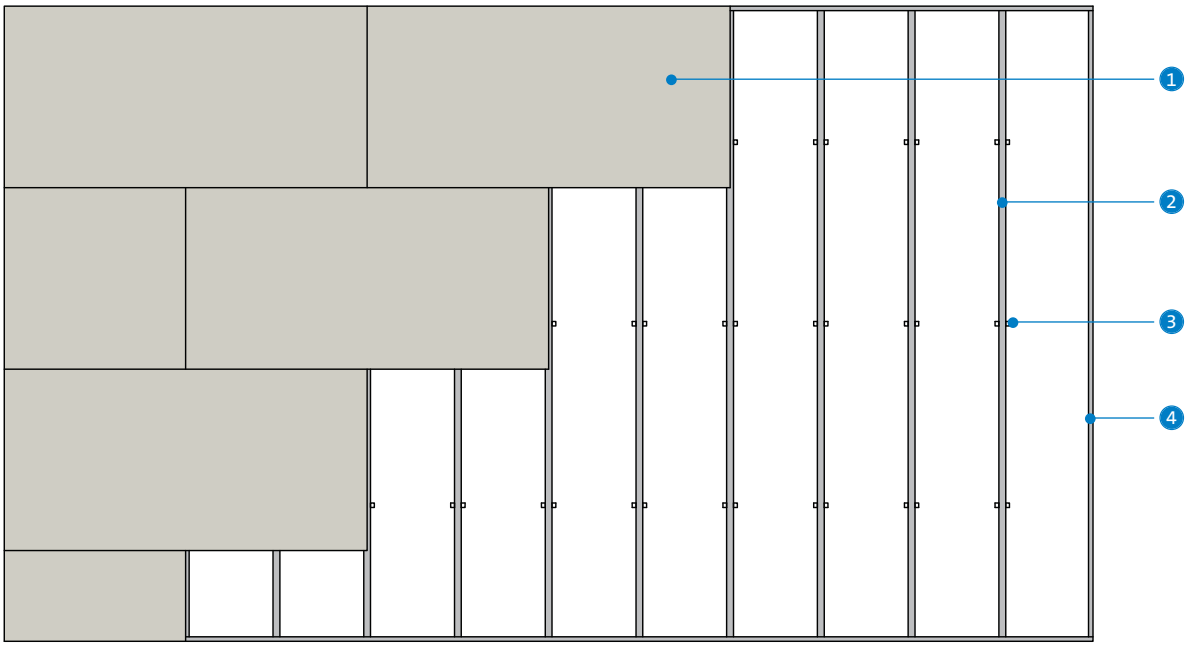

1. Gyproc plasterboard
2. Gypframe GL1 Lining Channel
3. Gypframe GL2, GL9 or GL12 Bracket
4. Gypframe GL8 Track
5. Concrete soffit

Construction details

4 Perimeter parallel to Gypframe GL1 Lining Channel for timber joist floor

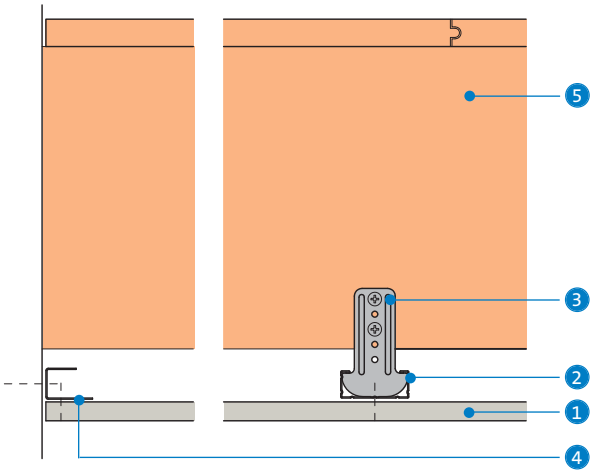

5 Perimeter perpendicular to Gypframe GL1 Lining Channel for timber joist floor

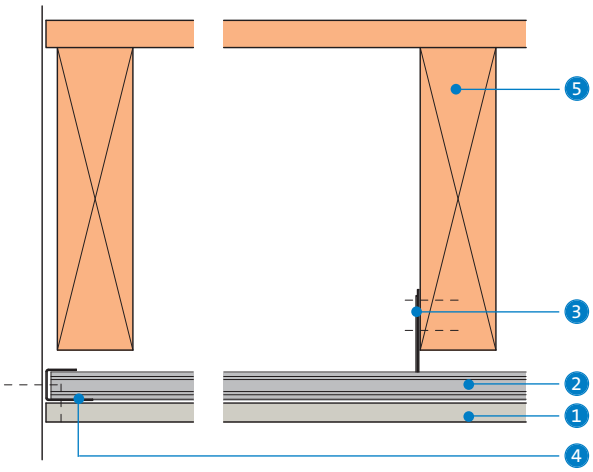

6 Reflected ceiling plan for timber joist floor - single layer 12.5mm Gyproc plasterboard with channels at 450mm maximum centres (or 15mm Gyproc plasterboard with channels at 600mm maximum centres)

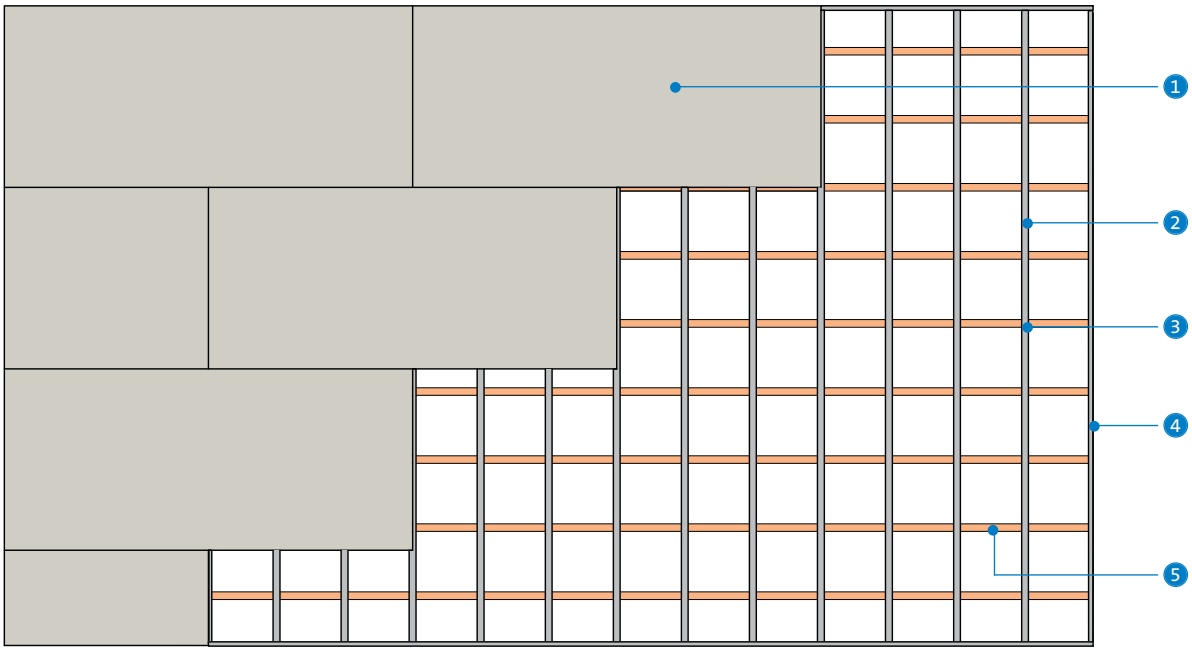

1. Gyproc plasterboard
2. Gypframe GL1 Lining Channel
3. Gypframe GL5 or GL6 Timber Connector
4. Gypframe GL8 Track
5. Timber joist floor

NB Gypframe GL5 or GL6 Timber Connectors not shown on Construction detail 6.

CasoLine GRID

Suspended grid ceiling system

This section includes updated information, added since it was first published in July 2009. Please see the WHITE BOOK update document for details.
Last updated 21/01/2011

Bristol Harbourside Apartments

CasoLine GRID

0.40 – 0.80 α_w Sound absorption

25 – 47 D_{ncw} dB

CasoLine GRID is a lightweight ceiling system available in concealed or exposed grid options. It presents an attractive pre-finished white ceiling and a range of decorative effects are possible by selecting the desired tile or plank edge profile and finish. Pre-finished tile options include smooth, textured, patterned or perforated effects. Pre-finished plank is available in smooth or perforated options.

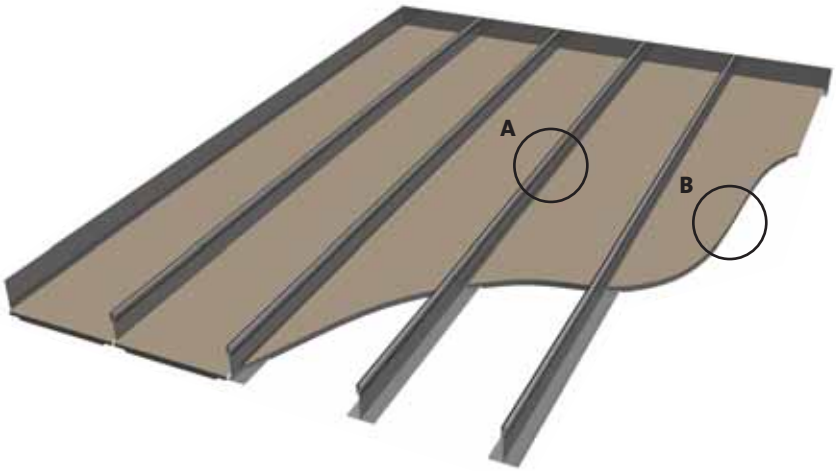

A CasoLine Main 'T'

B Gyptone plank

Key facts

- Concealed or exposed grid options
- Attractive pre-finished white surface
- Wide range of ceiling tiles and planks giving smooth, textured, patterned or perforated effects
- Provides sound attenuation and absorption
- Electrical and other services accommodated in plenum
- Will support loads up to 3kg per tile without a pattress
- Ceiling tile and plank site waste can be recycled using the British Gypsum Plasterboard Recycling Service
- Gyptone planks are available in bespoke sizes

Applications

Due to the design flexibility of CasoLine GRID, the system can be tailored to meet the requirements of a wide range of applications.

Sector

- ✓ Office / commercial
- ✓ Education
- ✓ High-rise multi-occupancy
- ✓ Retail
- ✓ Healthcare
- ✓ Auditoria
- ✓ Sport and leisure
- ✓ Apartment buildings

System components

CasoLine metal products

CLT2401 Main 'T'
24mm Main 'T' section, for Gyptone D1 edge tiles.
Length 3600mm

CLT24D101 Cross 'T'
24mm Cross 'T' section, for Gyptone D1 edge tiles.
Length 600mm

CLT15P01 Main 'T'
15mm Main 'T' section, for 1800mm Gyptone planks.
Length 1830mm

CLT15P02 Main 'T'
15mm Main 'T' section, for 2100mm Gyptone planks.
Length 2130mm

CLWA01 Wall Angle
32 x 19mm Wall Angle.
Length 3000mm

CLSM04 Shadowline Moulding
Shadowline Moulding for Gyptone planks.
Length 3000mm

CLC02 Wall Spring Clip
For Gyptone D1 edge tiles.

CLC03 Perimeter Clip
For E15 and E24 edge tiles.

MF12 Soffit Cleat
Suspension point from structural soffit.

Metal products (by others)

Proprietary lay-in grid T sections
and associated components.

Suspension wire

Ceiling tile and plank products

A wide range of products are available in Gyprex, Casoprano and Gyptone options.
▶ Refer to section 14 – Products, Ceilings.

Edge details

A

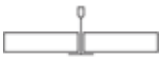

CasoLine T15/T24

E15

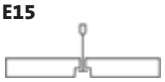

15mm T sections

E24

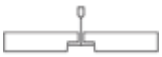

24mm T sections

D1

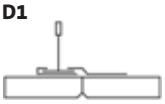

CasoLine T24D1

E15/A

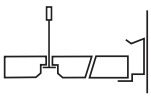

15mm and 24mm T sections

Insulation products

Isover APR 1200
50mm and 100mm, for improved acoustic performance.

Isover Spacesaver Ready-Cut
100mm, for improved acoustic performance.

Isover Modular Roll
80mm, for improved acoustic performance.

Isover Acoustic Slab
75mm, for improved acoustic performance.

Always use genuine branded British Gypsum components to qualify for **SpecSure**® lifetime warranty

Installation overview

T15P grid for Gyptone planks
CasoLine CLSM04 Shadowline Moulding is fixed to the wall at 300mm centres. Reduce the Main 'T' sections by a maximum of 10mm, in relation to the width of the room or corridor and fit into CasoLine CLSM04 Shadowline Moulding on the recessed flange. There is no requirement to install hangers to support the Main 'T' sections. Main 'T' sections should not be joined.

Gyptone planks are located on the lower flange of the CasoLine CLSM04 Shadowline Moulding. Corners and alcoves require specific detailing, see **Construction details – 5 - 6**.

T24D1 grid for Gyptone D1 edge tiles
CasoLine CLWA01 Wall Angle is fixed to the walls at 300mm centres. CasoLine CLT2401 Main 'T's are installed at 600mm centres, suspended from the structural soffit at 1200mm centres along the length. Hangers should be located close to the intersection of the Main 'T' and Cross 'T' to facilitate demounting of the tiles from the grid.

CLT24D101 Cross 'T's are installed between Main 'T's at 1200mm centres.

Fit Gyptone D1 edge tiles into the grid using the metal sections on the back of the tile. Fit cut tiles next to the wall last at a maximum of 2mm from the wall. Place two CasoLine CLC02 Wall Spring Clips per tile between the wall and the cut tile in order to push the tiles together.

Proprietary 15mm and 24mm grids for A and E edge tiles
A proprietary 600mm x 600mm grid should be installed fully in accordance with the manufacturers' guidelines.

Performance (▶ Refer to **section 3 - Basic principles of system design**)

Table 1 - Sound insulation (D_{ncw} dB)

Ceiling product	No insulation dB	Sound insulation D_{ncw} 100mm Isover Spacesaver Ready-Cut dB	System reference
Tiles			
Casoprano NOVA	25	42	C10A081/82
Casoprano BIANCA	38	46	C10A029/074
Casoprano FORTE	38	46	C10A032/079
Casoprano ROC	38	46	C10A027/070
Casoprano STAR	38	46	C10A030/076
Casoprano VOICE	25	42	C10A031/78
Gyprex SATINSPAR	37	–	C10A020
Gyprex BIO	37	–	C10A021
Gyptone BASE 31	37	–	C10A008
Gyptone SIXTO	–	39	C10A105
Gyptone LINE 4	–	39	C10A004
Gyptone QUATTRO 20	–	39	C10A003
Gyptone QUATTRO 22	–	39	C10A007
Gyptone POINT 11	–	39	C10A005
Gyptone POINT 12	–	39	C10A006
Planks			
Gyptone LINE 8 **Plank**	–	39	C10A009
Gyptone BASE 33 **Plank**	37	–	C10A011
Gyptone QUATTRO 55 **Plank**	–	39	C10A034
Gyptone POINT 15 **Plank**	–	39	C10A010

NB Figures quoted for sound insulation refer to room-to-room tests to *BS EN 20140-9*. Where higher levels are required other design considerations can be adopted, such as extending partitions into the ceiling void or installing a plenum barrier.

Table 2 - Sound absorption

Absorption class	Sound Absorption Coefficient α_w	Noise Reduction Coefficient (NRC)	Product	Plenum depth mm	Insulation type	System reference
Tiles						
B	0.80	0.75	Gyptone SIXTO	100	75mm Isover Acoustic Slab	C10A102
B	0.80	0.75	Gyptone SIXTO	300	75mm Isover Acoustic Slab	C10A105
C	0.70	0.65	Gyptone SIXTO	100	N/A	C10A101
C	0.60	0.75	Gyptone LINE 4	100	50mm Isover APR 1200	C10A094
C	0.65	0.60	Gyptone LINE 4	200	N/A	C10A004
C	0.60	0.60	Gyptone POINT 11	100	N/A	C10A093
C	0.65 (L)	0.65	Gyptone POINT 11	200	N/A	C10A005
C	0.60 (L)	0.65	Casoprano NOVA	100	100mm Isover APR 1200	C10A084
C	0.65	0.60	Gyptone QUATTRO 20	200	N/A	C10A003
C	0.60 (L)	0.65	Casoprano NOVA	100	100mm Isover APR 1200	C10A084
C	0.55 (L)	0.60	Casoprano NOVA	300	N/A	C10A082
D	0.50 (H)	0.50	Gyptone QUATTRO 20	100	N/A	C10A003
D	0.45 (L)	0.50	Gyptone QUATTRO 22	200	N/A	C10A007
D	0.40 (LM)	0.55	Gyptone POINT 12	200	N/A	C10A006
D	0.55 (L)	0.60	Casoprano NOVA	100	N/A	C10A083
D	0.55 (L)	0.55	Casoprano VOICE	400	N/A	C10A031
D	0.55 (L)	0.70	Casoprano VOICE	400	80mm Isover Modular Roll	C10A078
Planks						
C	0.65	0.60	Gyptone LINE 8 Plank	200	N/A	C10A009
C	0.75 (L)	0.75	Gyptone QUATTRO 55 Plank	100	50mm Isover APR 1200	C10A098
C	0.65	0.70	Gyptone QUATTRO 55 Plank	200	N/A	C10A034
C	0.65	0.60	Gyptone QUATTRO 55 Plank	100	N/A	C10A092
C	0.65 (L)	0.65	Gyptone POINT 15 Plank	200	N/A	C10A010

Performance (▶ Refer to **section 3 - Basic principles of system design**)

Table 3 - Light reflectance

Ceiling product	Paint reference	Light reflectance %
Casoprano tiles		
Casoprano ROC	RAL No. 9011	80
Casoprano BIANCA	RAL No. 9011	80
Casoprano STAR	RAL No. 9011	80
Casoprano VOICE	RAL No. 9011	75
Casoprano FORTE / NOVA	RAL No. 9011	75
Gyptone tiles		
Gyptone BASE 31	NCS 0500	82
Gyptone POINT 11	NCS 0500	75
Gyptone POINT 12	NCS 0500	75
Gyptone QUATTRO 20	NCS 0500	73
Gyptone QUATTRO 22	NCS 0500	73
Gyptone LINE 4	NCS 0500	70
Gyptone SIXTO	NCS 0500	70
Gyprex tiles		
Gyprex SATINSPAR	N/A	90
Gyprex BIO	N/A	90
Gyptone planks		
Gyptone BASE 33 Plank	NCS 0500	82
Gyptone POINT 15 Plank	NCS 0500	75
Gyptone QUATTRO 55 Plank	NCS 0500	73
Gyptone LINE 8 Plank	NCS 0500	70

NB Light reflectance test conducted in accordance with *ASTM E 1477-98*.

Design

Planning - key factors

Ceilings should be set out from the centre to give balanced widths of tiles at the perimeter. A number of grid layouts are possible, depending on the grid selected and the choice of ceiling tile or plank. See **Construction details – 1 - 6** for alternative configurations.

NB Designers and installers should take due regard of *EN 13964, suspended ceiling - requirements and test methods*.

Relative humidity (RH)

The grid is suitable for use in heated occupied buildings in conditions up to 90% relative humidity (RH90). Casoprano and Gyprex tiles are suitable up to RH90 and Gyptone tiles and planks up to RH70.

Cavity barriers

Where cavity barriers are required, they can be formed using Gyproc FireLine or Glasroc F MULTIBOARD screw-fixed to a simple metal or timber frame. The framing should be fixed to the structure to avoid undue loading of the ceiling suspension grid. The bottom of the framework should be fixed to the ceiling grid.

▶ Refer to **section 10 – Cavity fire barriers**.

Fire-stopping

It is necessary to provide suitable non-combustible fire-stopping material at the junction of a cavity barrier with the structural perimeter and the ceiling. Fire-stopping must also be provided around any service penetrations through the cavity barrier.

Water vapour control

The surface of Gyprex tiles has a water vapour resistance of 45MNs/g. Whilst the vinyl surface can provide an effective vapour control layer, it may be necessary to complete the integrity where the boards abut metal grid sections. This is achieved by sealing with continuous beads of water vapour resistant mastic, which should be applied to the back of the metal sections prior to inserting the tiles. Care should be taken to ensure that the mastic sealant does not damage the vinyl surface of the tiles.

Other precautions, such as cavity ventilation, may be necessary to reduce the risk of interstitial condensation.

Speech clarity

In order to achieve optimum speech clarity, Casoprano VOICE (sound absorbing) and Casoprano FORTE (sound insulating) tiles can be used in combination without changing the visual appearance of the ceiling area. Refer to Casoprano product literature, available to download from www.british-gypsum.com

Fixtures

Unperforated British Gypsum ceiling tiles will support a point load of up to 3kg / tile for maximum 2mm deflection (1kg / tile for D1 edge tiles). This will normally allow items such as spotlights and down-lighters to be installed without the need for a support pattress. A support pattress should, however, be installed where the prevailing environmental conditions exceed 25°C and RH70, or where the size of the cut-out required is greater than 150mm diameter or 150mm square. Perforated tiles should not be used to support fixtures. Apertures for spotlights and down-lighters can be cut into British Gypsum ceiling tiles using a circular tank cutter on a power drill or using a pad saw.

Table 4 - Self-weight of tiles in proprietary 15mm and 24mm grid systems

	Grid		Self-weight of tiles
	15mm	24mm	kg/m²
Casoprano	A	A	7.0 (unperforated) 6.5 (perforated)
	-	E24	7.9 (unperforated) 7.2 (perforated)
Gyptone	E15	-	8.5
Gyprex	A	A	6.3

The CasoLine T24D1 grid should not be point-loaded with more than 0.5kg between points of suspension. Distributed loads may be max. 2kg/m of section. Built-in light fittings that are placed between grid sections are suspended separately.

Gyptone plank installed in the CasoLine TI5P grid must not be loaded. Light fittings and other fixtures should be independently supported. If mineral wool is placed above the ceiling, the maximum self-supporting distance is reduced to 1800mm. Hangers should be used for increased spans.

Services

The ceiling void above the suspension grid can be used to route all service requirements including ducting, pipework, electrical cables, and conduits. Ducting, ventilation units, etc, must be independently supported from the structure.

Maintenance

Ceiling tiles and planks can be cleaned using a damp cloth or soft brush. Most standard mild detergents can be used. Tiles other than Gyprex can be re-decorated if required using a suitable emulsion paint and a short-haired brush or roller (spray painting will impair sound absorption).

▶ Please refer to **section 3 - Basic principles of system design** for general guidance

Construction details

1 15mm and 24mm exposed lay-in grid with interlocking Main and Cross 'T's
- for square edge A and rebated edge E15 and edge E24

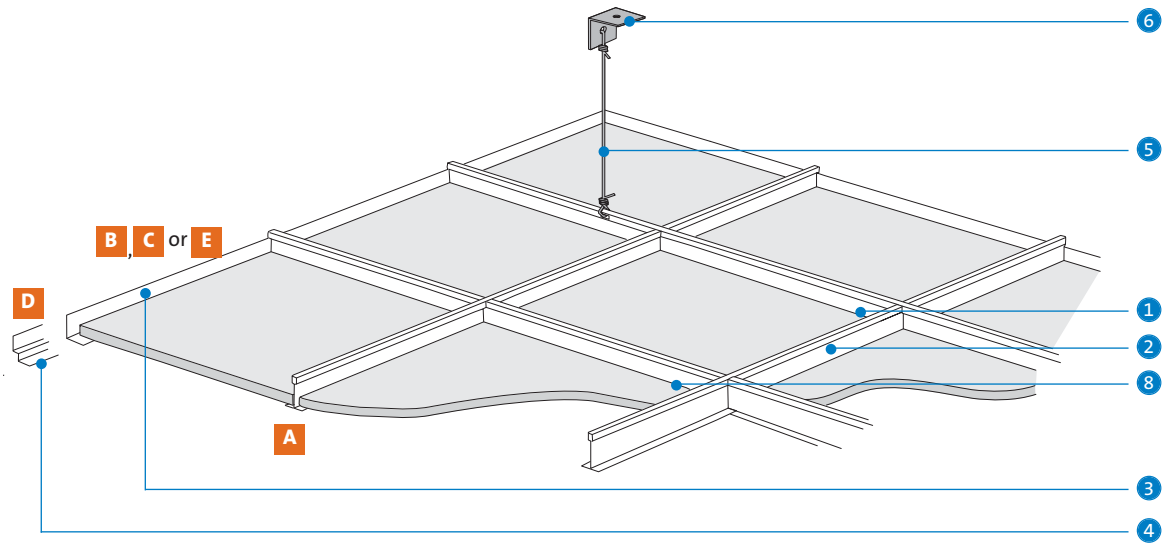

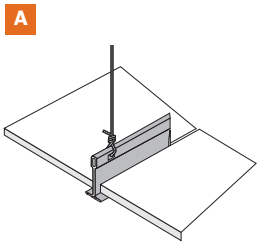

Square edge

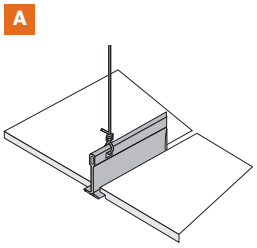

Rebated edge

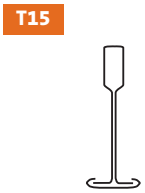

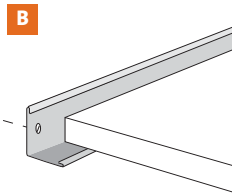

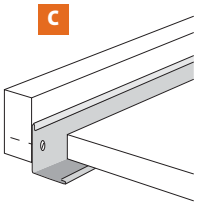

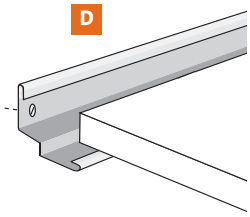

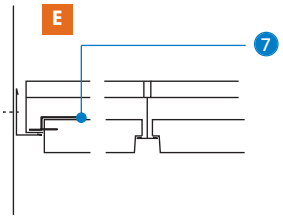

1. Main 'T'
2. Cross 'T' 1200mm
3. Wall angle
4. Shadowline moulding
5. Suspension wire
6. Soffit cleat
7. CasoLine CLC03 Perimeter Clip for E15 and E24 tiles
8. Cross 'T' 600mm

NB These details are for illustrative purposes only. Precise details will vary according to the proprietary grid system used.

2 Proprietary 15mm and 24mm exposed lay-in grid with interlocking Main and Cross 'T's
- for square edge A and rebated edge E15 and edge E24

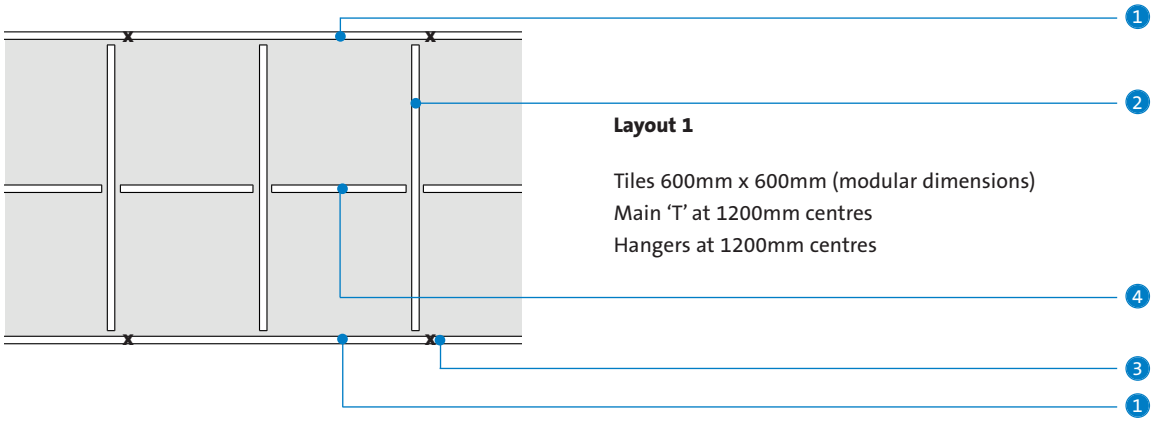

Layout 1

Tiles 600mm x 600mm (modular dimensions)
Main 'T' at 1200mm centres
Hangers at 1200mm centres

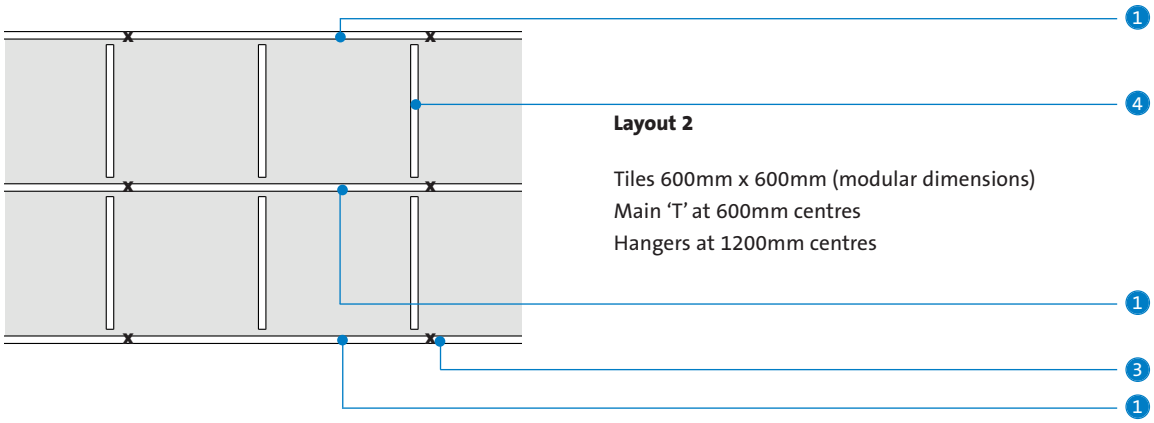

Layout 2

Tiles 600mm x 600mm (modular dimensions)
Main 'T' at 600mm centres
Hangers at 1200mm centres

1. Main 'T' section
2. Cross 'T' section 1200mm
3. Hanger shown as **x**
4. Cross 'T' section 600mm

NB These details are for illustrative purposes only. Precise details will vary according to the proprietary grid system used.

Construction details

3 CasoLine T24D1 concealed grid system consisting of interlocking Main 'T's and Cross 'T' spacers
- for concealed / demountable edge Gyptone D1 edge tiles

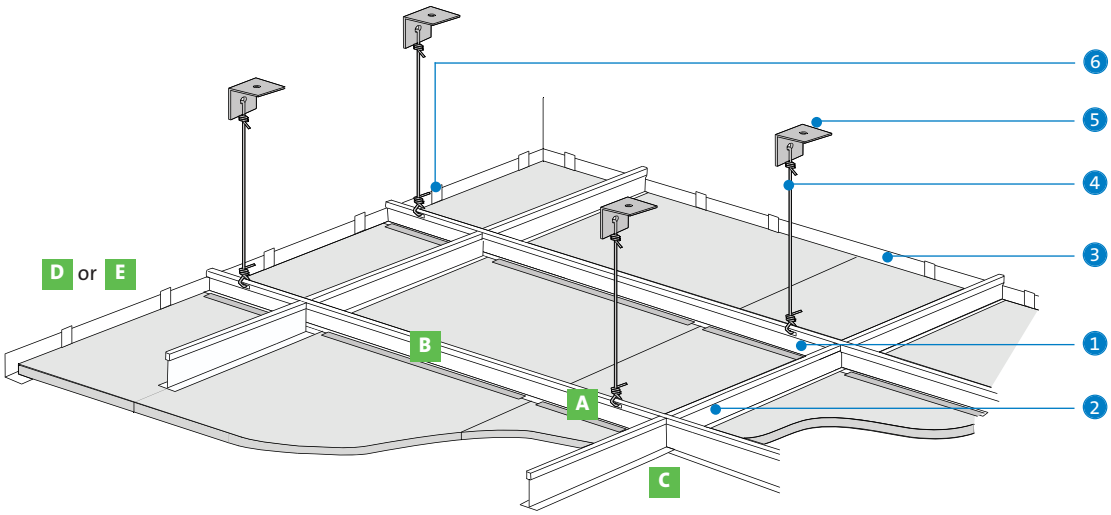

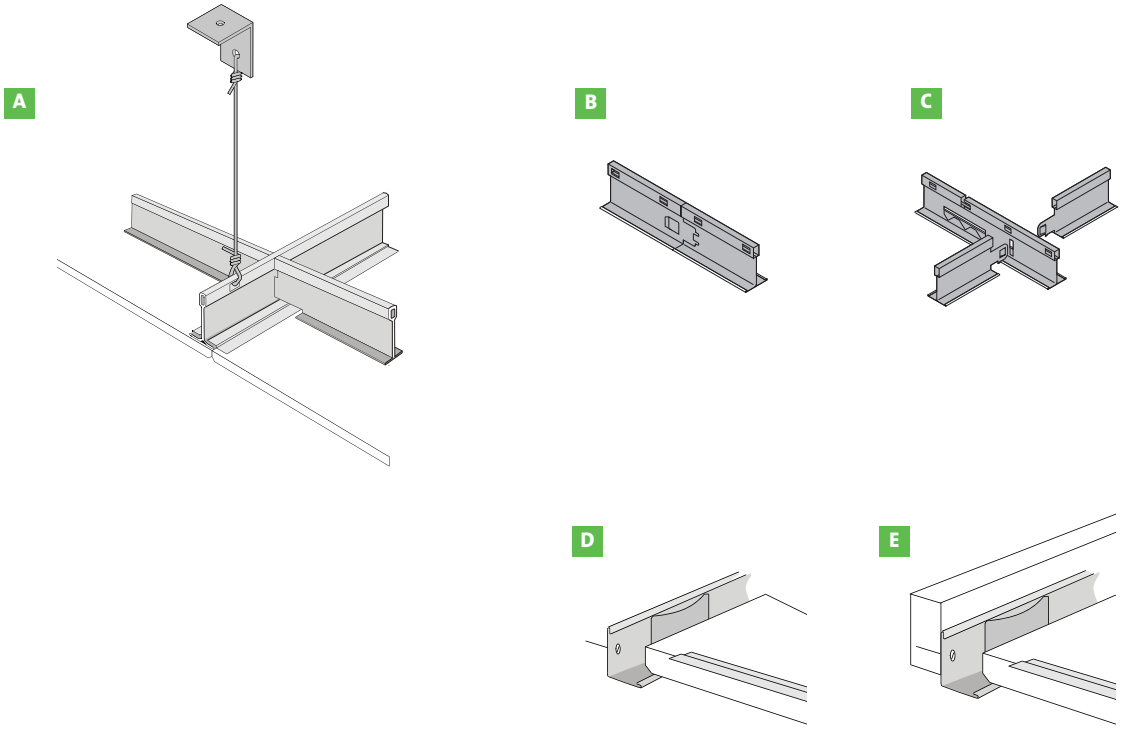

1. CasoLine CLT2401 Main 'T' section
2. CasoLine CLT24D101 Cross 'T' section
3. CasoLine CLWA01 Wall Angle
4. 14swg suspension wire (by others)
5. Gypframe MF12 Soffit Cleat
6. CasoLine CLC02 Wall Spring Clip

4 CasoLine T24D1 concealed grid system consisting of interlocking Main 'T's and Cross 'T' spacers - for concealed / demountable Gyptone D1 edge tiles

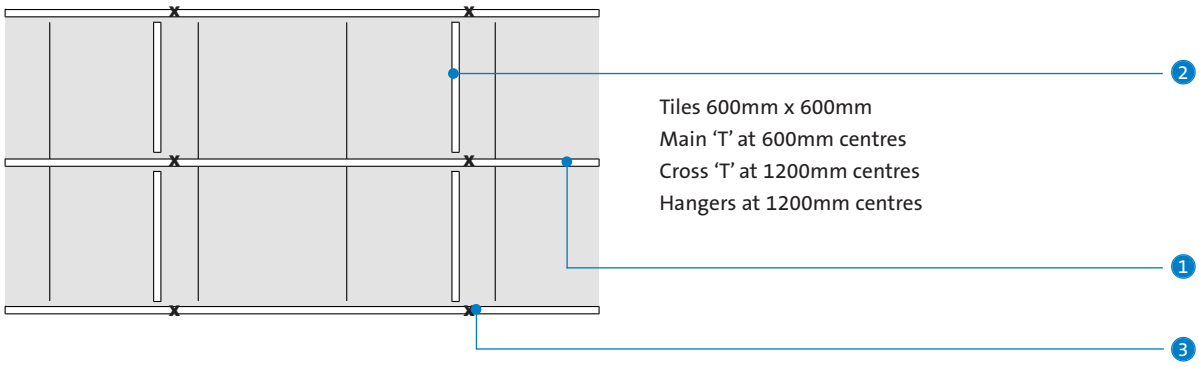

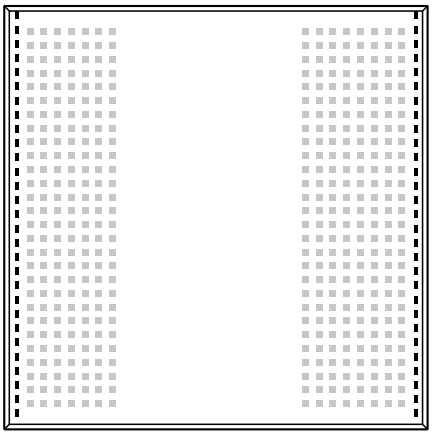

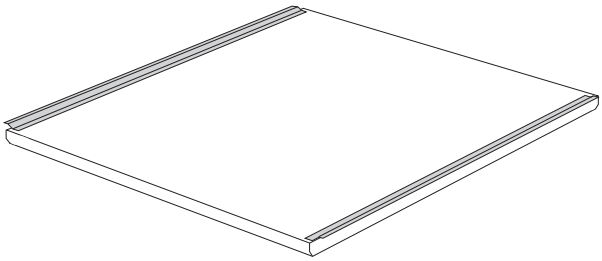

NB Metal support sections on the back of tiles run parallel with perforated areas.

1 CasoLine CLT2401 Main 'T' section
2 CasoLine CLT24D101 Cross 'T' section
3 Hanger shown as **x**

Construction details

5 CasoLine T15P exposed metal grid fixing system - for Gyptone plank, edge E/A

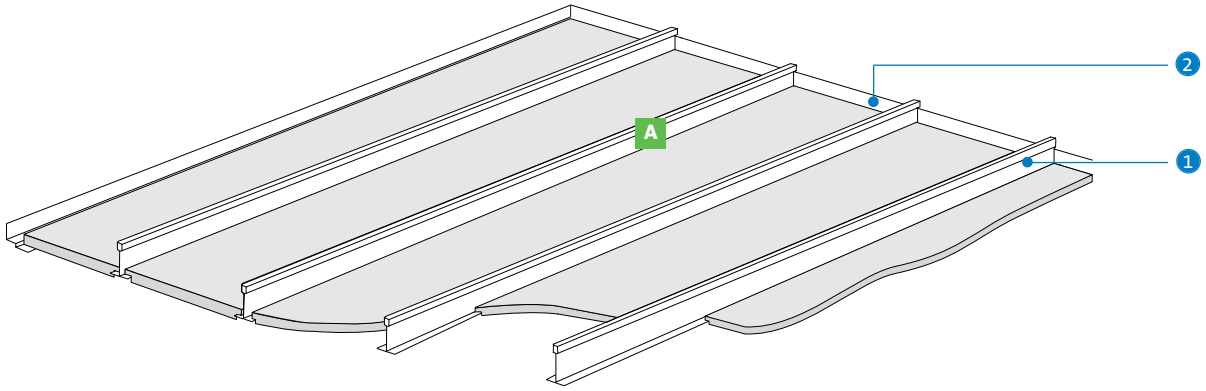

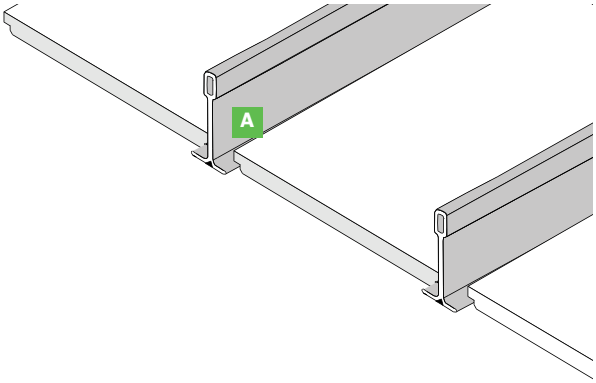

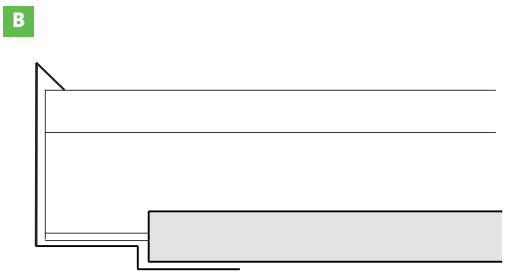

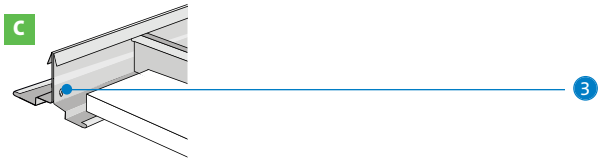

(See example layouts opposite)

1. CasoLine CLT15P01 Main 'T' section or CasoLine CLT15P02 Main 'T' section
2. CasoLine CLSM04 Shadowline Moulding
3. Gyproc Wafer Head Jack-Point Screw at 300mm centres

6 CasoLine T15P exposed metal grid fixing system - for Gyptone plank, edge E/A

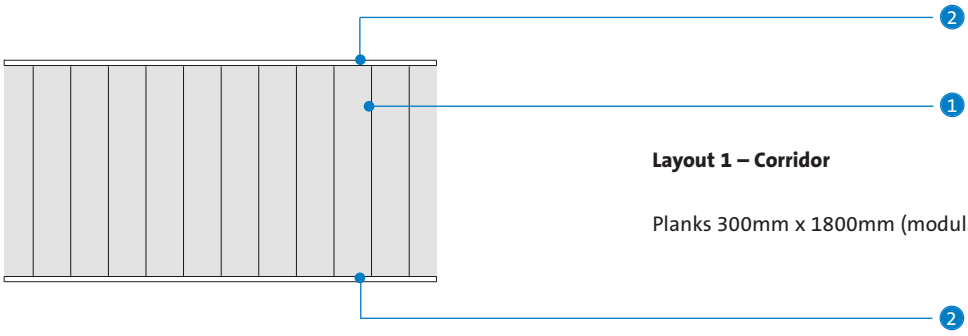

Layout 1 – Corridor

Planks 300mm x 1800mm (modular dimensions)

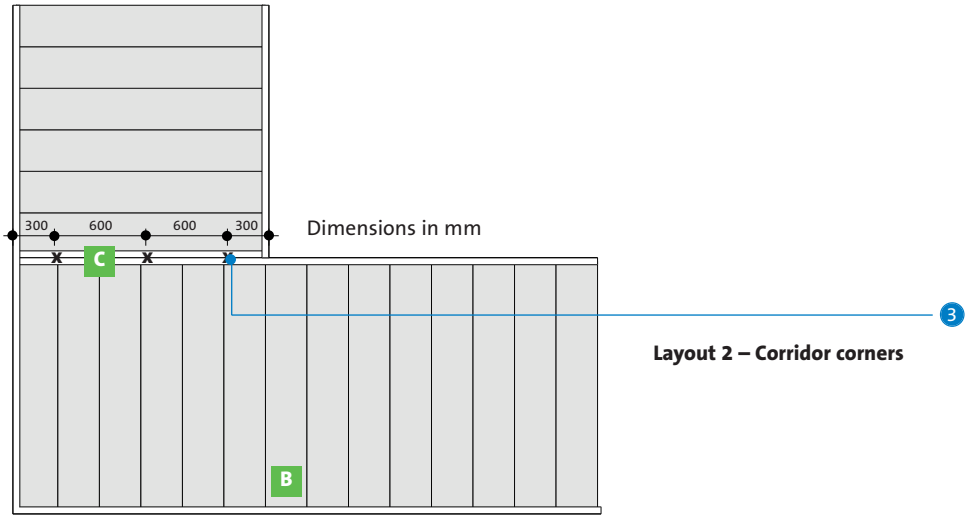

Dimensions in mm

Layout 2 – Corridor corners

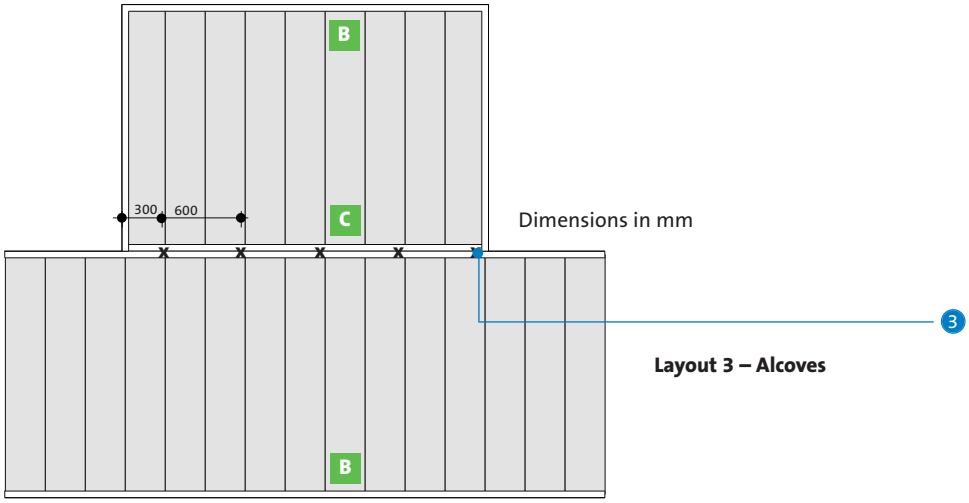

Dimensions in mm

Layout 3 – Alcoves

1. CasoLine CLT15P01 Main 'T' section or CasoLine CLT15P02 Main 'T' section
2. CasoLine CLSM04 Shadowline Moulding
3. Hanger shown as **x**

GypFloor SILENT

Sound insulating floor system

This section includes updated information, added since it was first published in July 2009. Please see the WHITE BOOK update document for details.
Last updated 21/01/2011

Moyles Hotel,
Hebden Bridge

GypFloor SILENT

54 – 63 R_w dB Airborne | 63 – 55 L_{nw} dB Impact | 30 – 90 mins

GypFloor SILENT is specified in residential conversion or improvement work to upgrade an existing timber joist floor to meet the acoustic requirements of Building Regulations Approved Document E.

It is also used in new-build to improve the sound insulation performance of internal floors.

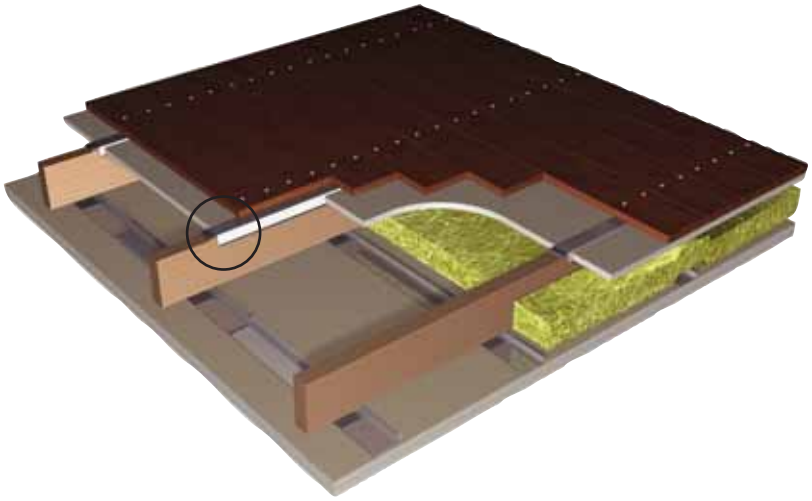

Gypframe SIF1 Floor Channel

OR

Gypframe SIF2 Floor Channel

OR

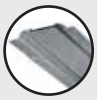
Gypframe SIF4 Floor Channel

Key facts

- Improves airborne and impact sound insulation of existing timber joist floors
- Widely used in conversion work and refurbishment
- Resilient interface between channel and floor joist
- Minimal increase in floor depth

Applications

Acoustic upgrade of existing timber floors.

Sector

✓ Housing

✓ Apartment buildings

✓ High-rise multi-occupancy

System components

Gypframe metal products

SIF1 Floor Channel

Length	2000mm
Width	127mm

SIF2 Floor Channel

Length	2000mm
Width	85mm

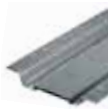

SIF4 Floor Channel

Length	2000mm
Width	140mm

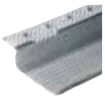

RB1 Resilient Bar

Length	3000mm

Board products

Gyproc WallBoard[1]

Thickness	12.5mm
Width	1200mm

Gyproc SoundBloc

Thickness	12.5, 15mm
Width	1200mm

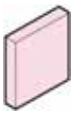

Gyproc FireLine

Thickness	15mm
Width	1200mm

Gyproc Plank

Thickness	19mm
Width	600mm

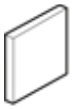

Glasroc F MULTIBOARD

Thickness	12.5mm
Width	1200mm

[1] Also available in DUPLEX grades where vapour control is required.

Fixing and finishing products

Gypframe SIF5 Floor Screws
For fixing floorboards through Gyproc Plank into the Gypframe floor channel flange.

Gyproc Drywall Screws
For fixing boards to Gypframe metal framing less than 0.8mm thick ('I' studs less than 0.6mm thick).

Gyproc Sealant
Sealing air paths for optimum sound insulation.

Gyproc jointing materials
For seamless jointing.

Thistle Board Finish or Thistle Multi-Finish
To provide a plaster skim finish.

Insulation products

Isover Spacesaver Ready-Cut
100mm, to achieve acoustic performance.

Always use genuine branded British Gypsum components to qualify for **SpecSure**® lifetime warranty

Installation overview - Floor system installation

For joists of 63mm or less, Gypframe SIF1 Floor Channel is located centrally over the joists, leaving a 6mm clearance gap at walls. Where joints in channel sections occur, sections are butted together. Where joists run within 30mm of the wall, Gypframe SIF2 Floor Channel is located in place of Gypframe SIF1 Floor Channel. Gyproc Plank is cut to a neat, but not tight, fit between channels. Flooring is laid across the channels and screw-fixed through the Gyproc Plank to the channel flange on one side only, using Gypframe SIF5 Floor Screws. It is important to ensure that no fixings are allowed to connect the Gypframe floor channels to the joists.

When fixing to joists 64mm - 75mm in width, Gypframe SIF4 Floor Channel is used in place of Gypframe SIF1 Floor Channel. For joists over 75mm width, two Gypframe SIF2 Floor Channels (suitably overlapped) are installed.

Service penetrations

Gyproc Plank and flooring is cut neatly to allow the service to penetrate, with a small clearance, sealed to maintain acoustic performance and suitably fire-stopped.

Installation overview - Ceiling fixing

Gypframe RB1 Resilient Bars are fixed through their base flange to each joist using Gyproc Drywall Screws. Resilient bar noggings are fixed at the perimeters. 100mm Isover Spacesaver Ready-Cut is laid between joists to rest on the resilient bars. If the bars are not long enough to span the ceiling, butt the ends together directly under a joist and screw-fix through the flange of both ends. Base layer boards are fixed to resilient bars with their long edges at right angles to the resilient bars. Face layer boards are fixed through to all resilient bars. Select an appropriate screw length to ensure that screws do not contact the joists.

For full installation details, refer to the British Gypsum **SITE** BOOK, available to download from www.british-gypsum.com

For full installation details, refer to the British Gypsum **SITE BOOK**, available to download from www.british-gypsum.com

Performance (▶ Refer to **section 3 - Basic principles of system design**)

EN

Table 1a – GypFloor SILENT and ceiling installed to existing solid timber joists
Solutions to satisfy the requirements of *BS EN 1365-2: 2000*

1

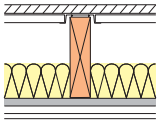

GypFloor SILENT comprising Gyproc Plank on Gypframe SIF Floor Channel located over timber joists (minimum 195mm deep at 450mm / 600mm centres). Walking surface of chipboard or softwood flooring (21mm minimum). 100mm Isover Spacesaver Ready-Cut in the cavity. Gypframe RB1 Resilient Bars fixed at 450mm centres. Ceiling linings as in table.

Detail	Ceiling lining	Ceiling depth mm	Board type	Lining thickness mm	Sound insulation Airborne R_w (R_w + Ctr) dB	Sound insulation Impact L_{nw} dB	System reference
60 minutes fire resistance EN							
1	Resilient bar	46	SoundBloc	2 x 15	61 (48)	56	C204006
1	Resilient bar	47.5	Plank + FireLine	19 + 12.5	63 (51)	55	C204003

NB The fire resistance and sound insulation performances are for imperforate partitions, walls and ceilings incorporating boards with all joints taped and filled, or skimmed according to British Gypsum's recommendations. The quoted performances are achieved only if British Gypsum components are used throughout, and the Company's fixing recommendations are strictly observed. Any variation in the specifications should be checked with British Gypsum.

Table 1b – GypFloor SILENT and ceiling installed to existing solid timber joists
Solutions to satisfy the requirements of *BS 476: Part 21: 1987*

1

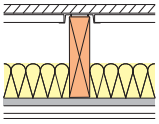

GypFloor SILENT comprising Gyproc Plank on Gypframe SIF Floor Channel located over timber joists (minimum 195mm x 45mm joists at 450mm centres). Walking surface of chipboard or softwood flooring (21mm minimum). 100mm Isover Spacesaver Ready-Cut in the cavity. British Gypsum ceiling installed to underside of joists with bars / channels spaced at 450mm centres.
Ceiling linings as in table.

Detail	Ceiling lining	Ceiling depth mm	Board type	Lining thickness mm	Sound insulation Airborne R_w (R_w + Ctr) dB	Sound insulation Impact L_{nw} dB	System reference
60 minutes fire resistance BS							
1	Resilient bar	46	SoundBloc	2 x 15	61 (48)	56	C204006
1	Resilient bar	47.5	Plank + SoundBloc	19 + 12.5	63 (51)	55	C204001
1	**GypLyner UNIVERSAL**	47.5	Plank + SoundBloc	19 + 12.5	63 (50)	55	C154008
90 minutes fire resistance BS							
1	Resilient bar	46	FireLine	2 x 15	60 (47)	57	C204002

NB The fire resistance and sound insulation performances are for imperforate partitions, walls and ceilings incorporating boards with all joints taped and filled, or skimmed according to British Gypsum's recommendations. The quoted performances are achieved only if British Gypsum components are used throughout, and the Company's fixing recommendations are strictly observed. Any variation in the specifications should be checked with British Gypsum.

Performance (▶ Refer to **section 3 - Basic principles of system design**)

BS **Table 2 – GypFloor SILENT installed on existing solid timber joists (ceiling retained)**
Solutions to satisfy the requirements of *BS 476: Part 21: 1987*

1

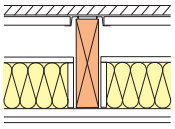

GypFloor SILENT comprising Gyproc Plank on Gypframe SIF Floor Channel located over timber joists. Walking surface of chipboard or softwood flooring (21mm minimum). Cavity bridged between joists (minimum joist width 50mm) by 12.5mm Glasroc F MULTIBOARD resting on 100mm x 12.5mm Glasroc F MULTIBOARD strips (screw-fixed to joists flush with bottom edge, at 300mm centres). 100mm Isover Spacesaver Ready-Cut in the cavity. Existing ceiling linings as in table.

2

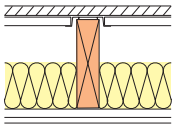

GypFloor SILENT comprising Gyproc Plank on Gypframe SIF Floor Channel located over timber joists. Walking surface of chipboard or softwood flooring (21mm minimum). 100mm Isover Spacesaver Ready-Cut in the cavity. Ceiling linings as in table.

Detail	Ceiling lining	Ceiling depth mm	Lining thickness mm	Sound insulation Airborne R_w dB	Sound insulation Impact L_{nw} dB	System reference
30 minutes fire resistance BS						
2	Plank + WallBoard	47.5	19 + 12.5	54	63	C204004
2	Existing plasterboard + SoundBloc overboarding	41	12.5 + 12.5	54	63	C204005
60 minutes fire resistance BS						
1	Plank + WallBoard[1]	47.5	19 + 12.5	54	63	G104032
2	Existing plasterboard + FireLine overboarding	43.5	12.5 + 15	54	63	C204007

[1] Linings used in acoustic tests to simulate a lath and plaster ceiling in good condition.

NB The fire resistance and sound insulation performances are for imperforate partitions, walls and ceilings incorporating boards with all joints taped and filled, or skimmed according to British Gypsum's recommendations. The quoted performances are achieved only if British Gypsum components are used throughout, and the Company's fixing recommendations are strictly observed. Any variation in the specifications should be checked with British Gypsum.

Design

Planning - key factors

The GypFloor SILENT system adds 7mm to the level of the top of the joists. The finished surface of the applied ceiling linings will be 16mm plus the thickness of the lining boards from the underside of the joists when Gypframe RB1 Resilient Bar is used. Ceiling linings should be fixed prior to any installation of drylining or plastering on walls. If this is not possible, ceiling linings should neatly abut the wall.

In refurbishment work the level of existing joists should be checked. Their upper surfaces should be reasonably level and straight for the flooring application. If there is misalignment of their lower surfaces, consideration should be given to using a GypLyner UNIVERSAL or CasoLine MF suspended ceiling to support the ceiling boards.

Structural

The system is primarily intended for timber floors with an intensity of distributed load of up to 5.0kN/m^2, and a point load of 4.5kN. An increase in the mass of the floor will result from upgrading. The load capacity of the supporting floor joists should therefore be checked, with due consideration to the effects of lateral buckling and the need for intermediate restraints. This may be particularly important where the system is to be used in conjunction with engineered timber 'I' joists.

Flanking transmission

Care should be taken to ensure that the associated structure is suitable to achieve the level of sound insulation required. Particular reference to Building Regulations Approved Document E should be made as regards the use of this floor type and the requirements of the surrounding structure. Where the walls supporting the floor weigh less than 365kg/m^2 the use of an acoustic shield lining to the walls should be considered. Flanking detail specifications are given in the current British Gypsum **Home**Spec publication, available to download from www.british-gypsum.com

Services

The installation of services within the floor zone should be carried out to allow easy access from above and should, where possible, follow the line of the floor joists.

▶ Refer to **section 3.5 – Service installations.**

Board finishing

▶ Refer to **section 13 – Finishing systems and decorative effects.**

Construction details

1 Cut-away floor plan (chipboard flooring)

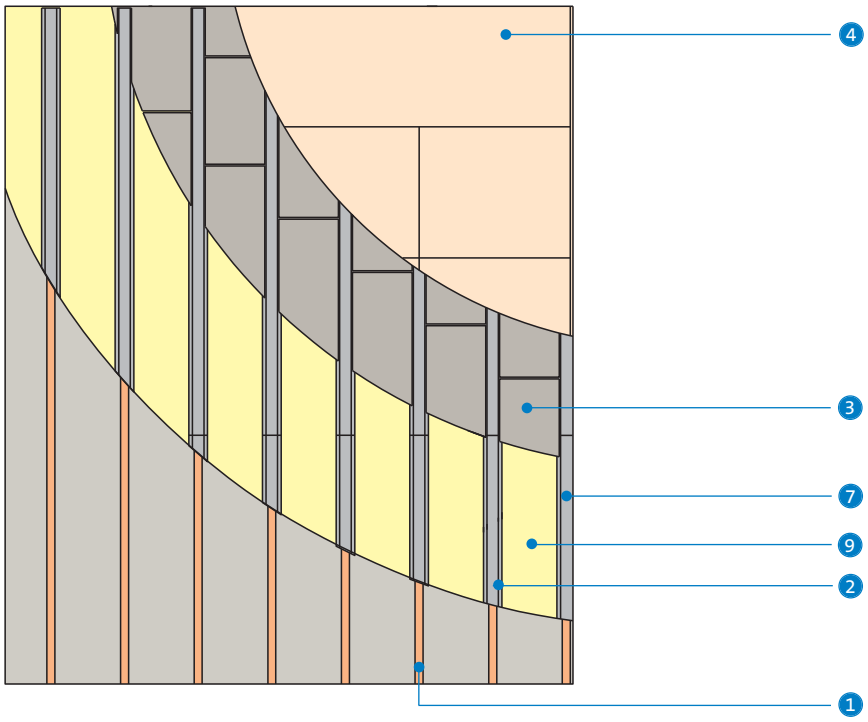

2 Reflected ceiling plan (12.5mm x 1200mm x 2700mm Gyproc SoundBloc over Gyproc Plank fixed to Gypframe RB1 Resilient Bars)

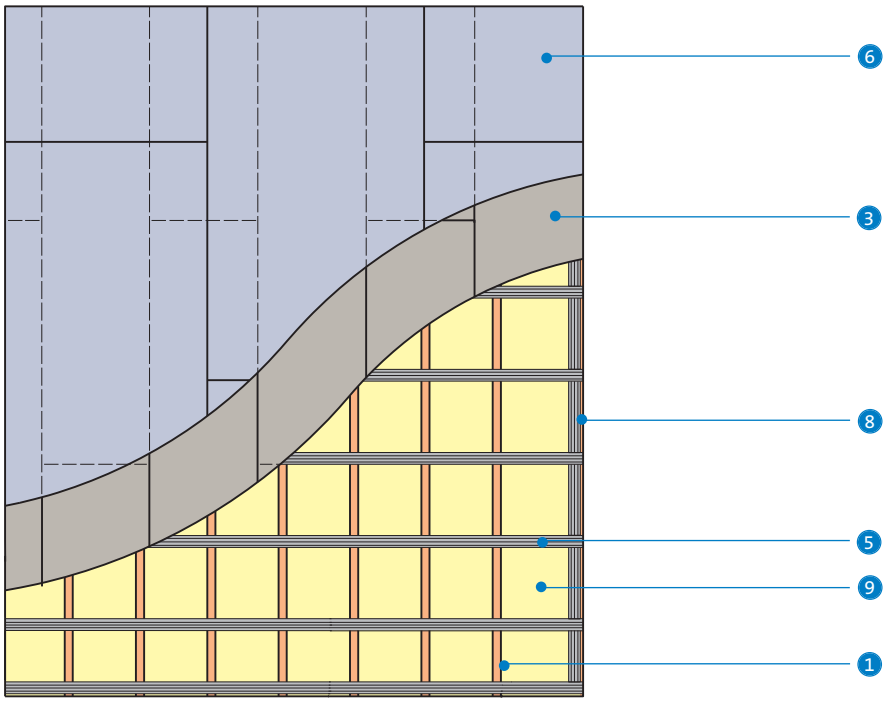

1. Solid timber joists
2. Gypframe SIF1 Floor Channel
3. Gyproc Plank
4. Chipboard flooring
5. Gypframe RB1 Resilient Bar
6. Gyproc SoundBloc
7. Gypframe SIF2 Floor Channel
8. Gypframe RB1 Resilient Bar noggings at room perimeter
9. Isover Spacesaver Ready-Cut

Construction details

3 Typical section through floor

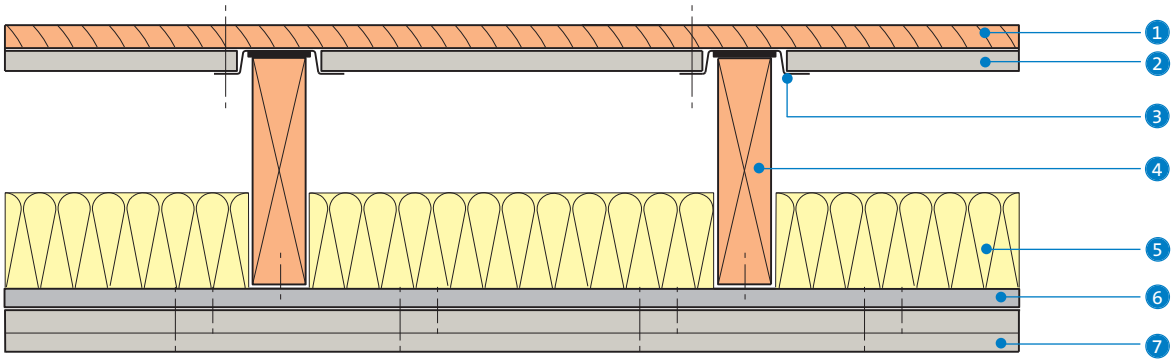

4 Section through floor – joist width over 75mm

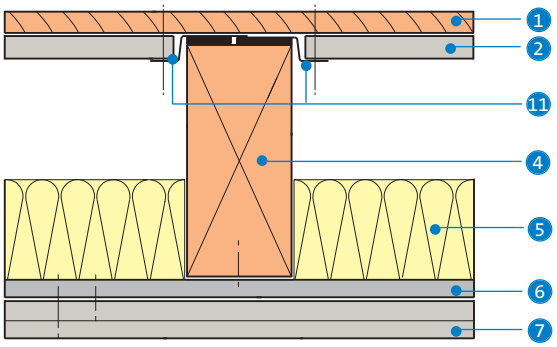

5 Perimeter junction - inner leaf of external wall exceeds mass of 365kg/m²

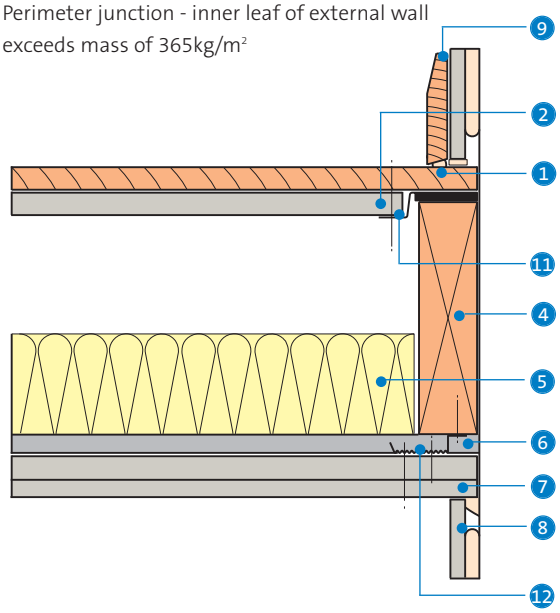

6 Non-loadbearing partition sited over joists

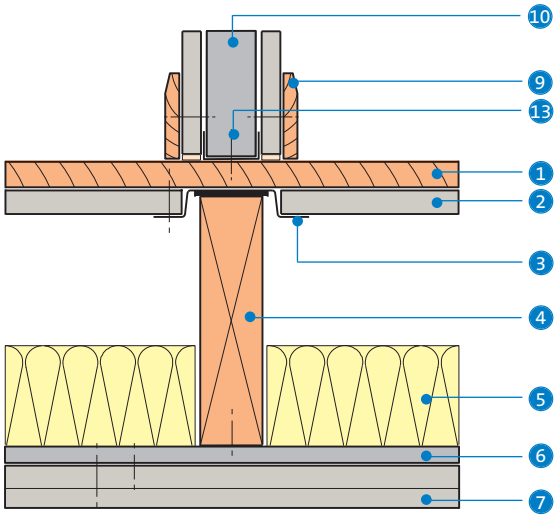

1. Chipboard / softwood flooring
2. Gyproc Plank
3. Gypframe SIF1 / SIF4 Floor Channel
4. Solid timber joist
5. 100mm Isover Spacesaver Ready-Cut
6. Gypframe RB1 Resilient Bars[1]
7. Gyproc plasterboard
8. Wall lining
9. Skirting
10. **GypWall** partition
11. Gypframe SIF2 Floor Channel
12. Gypframe RB1 Resilient Bar noggings
13. Fixing length selected to avoid reaching the Gypframe SIF1 Floor Channel

[1] Alternatively, a **GypLyner UNIVERSAL** ceiling system may be specified.

GypFloor SB

Floating floor treatment for residential separating floors

This section includes updated information, added since it was first published in July 2009. Please see the WHITE BOOK update document for details.
Last updated 05/07/2010

George Wimpey,
Pembroke Grange, Caversham
Images courtesy of Taylor Wimpey

GypFloor SB

64 – 69	54 – 48	65 – 71	51 – 43	60
R_w dB Airborne (timber)	L_{nw} dB Impact (timber)	R_w dB Airborne (concrete)	L_{nw} dB Impact (concrete)	mins

GypFloor SB is a resilient floating floor treatment for use within residential separating floors. GypFloor SB incorporates Gypframe Steel Battens to create a walking surface of superior stability and a solid platform upon which lightweight internal non-loadbearing partitions and ceramic tiling can be installed. GypFloor SB is compatible with British Gypsum ceiling systems and can be specified within timber and concrete constructions to achieve higher standards of sound insulation than those required by Building Regulations Approved Document E.

Timber floor

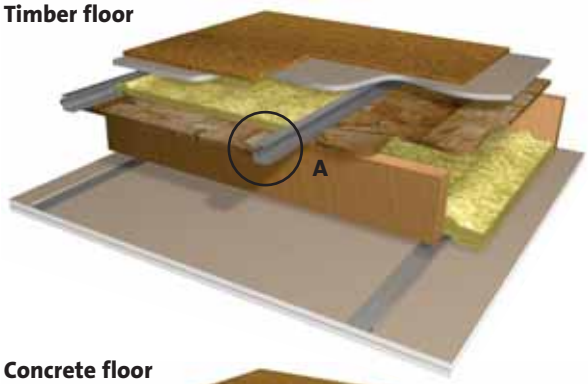

Concrete floor

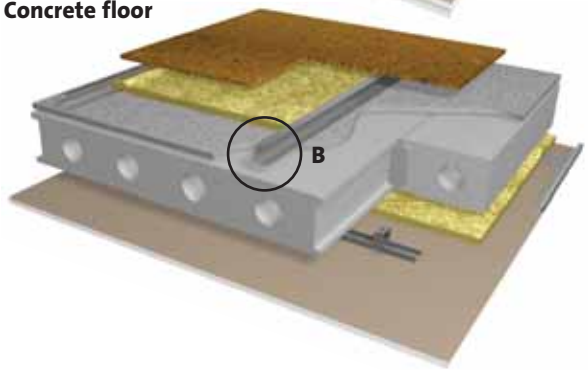

Key facts

- GypFloor SB is incorporated within a range of British Gypsum separating floor systems
- GypFloor SB comprises lightweight engineered Gypframe UltraSTEEL® components
- Cradles and packers provide option for levelling uneven sub-structures
- Service voids of either 50mm or 70mm can be incorporated within GypFloor SB
- Offers a walking surface of superior stability

Applications

Separating floor applications in residential buildings.

Sector

✓ Apartment buildings

✓ High-rise multi-occupancy

System components

Gypframe metal products

50 SB 65 Steel Batten
For use with shallow batten system.

Length	1800mm
Depth	50mm

70 SB 65 Steel Batten
For use with deep batten system.

Length	1800mm
Depth	70mm

SB3 Flanking Strip
To minimise flanking sound transmission.

Length	10m roll
Width	150mm

SB4 Levelling Cradle
For use in masonry separating floors.

SB5 Levelling Packer
For use in masonry separating floors.

British Gypsum ceiling systems[1]

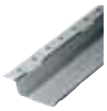

Gypframe RB1 Resilient Bar

Length	3000mm

[1] For **GypLyner UNIVERSAL** ceiling components, refer to **section 8 – Floor, ceiling and soffit systems, GypLyner UNIVERSAL**. For **CasoLine MF** ceiling components, refer to **section 8 – Floor, ceiling and soffit systems, CasoLine MF**.

Board products

Gyproc SoundBloc

Thickness	12.5, 15mm
Width	1200mm

Gyproc FireLine[2]

Thickness	12.5mm
Width	1200mm

Gyproc Plank

Thickness	19mm
Width	600mm

[2] Also available in DUPLEX grade where vapour control is required.

Fixing and finishing products

Gypframe SIF5 Floor Screws
For fixing floorboards through Gyproc Plank into the Gypframe Steel Battens.

Glasroc F FIRECASE Screws
For fixing floorboards through Gyproc Plank into the Gypframe Steel Battens.

Gyproc Drywall Screws
32mm Drywall Screws can be used to fix Gyproc Plank to Gypframe Steel Battens if required, and also for fixing boards to Gypframe RB1 Resilient Bars.

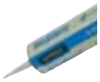

Gyproc Sealant
Sealing air paths for optimum sound insulation.

Gyproc jointing materials
For seamless jointing.

Thistle Board Finish or Thistle Multi-Finish
To provide a plaster skim finish.

Insulation products

Isover APR 1200
25mm, 50mm and 100mm, to achieve acoustic performance.

Installation overview - GypFloor SB on a timber or level concrete substructure

Floor system

Before starting work, ensure floor area is swept clear of loose material and debris. Additionally, to allow adhesion of flanking strip, ensure surrounding walls are free from dust and loose material. Apply Gypframe SB3 Flanking Strip around the room perimeter against the lower part of the wall. Any excess strip can be cut away once the floor is laid. Lay Gypframe Steel Battens around the room perimeter leaving a 50mm gap between the wall and the batten.

For normal (domestic) loading, position Gypframe Steel Battens at 400mm centres. A 25mm gap should be left between perpendicular sections. Joints in the battens should be staggered by a minimum of 600mm between rows to avoid the occurrence of more than one joint under any one piece of flooring. When using the system on uneven sub-floors, Gypframe SB4 Levelling Cradles can be positioned under the sections. Gypframe SB5 Levelling Packers can be used inside the cradle, as required.

Where specified, Isover APR 1200 is laid within the cavity between the battens.

Loadbearing partitions and separating walls should be erected directly onto the sub-floor. Non-loadbearing internal partitions, such as the **GypWall** range, can be erected on top of the **GypFloor SB** system. Provision should be made in the layout to allow one or two (depending on partition width) Gypframe Steel Battens beneath the partition to provide support and a fixing ground. To minimise the effect of any camber on concrete sub-floors, partitions can be mounted into the sub-floor, thus minimising the effect by dividing the floor area into individual rooms.

Where specified, Gyproc Plank is laid across the battens and staggered with a minimum 10mm expansion gap left around the perimeter. The ends of the Gyproc Plank should be supported by a Gypframe Steel Batten. Gyproc Plank is fitted by lightly butting edges together. No screw-fixings are required, however, screws can be used to aid installation by securing boards in place.

Tongue and groove chipboard is laid over the Gyproc Plank, and staggered with a minimum 10mm expansion gap left around the perimeter. Apply glue (as recommended by the chipboard manufacturer) to the tongued joints before butting together. Excess glue should be removed from the face of the chipboard before it dries by using a damp cloth. Gypframe SIF5 Floor Screws or Glasroc F FIRECASE Screws are suitable for fixing the walking surface to the battens.

NB All fixings into **GypFloor SB** sections should penetrate through the top of the section by a minimum 10mm, but not protrude through the whole section.

To fix skirting boards, first fold protruding Gypframe SB3 Flanking Strip onto the face of the flooring. The skirting is then fixed as normal, so that it rests on the flanking strip. Any excess flanking strip can be trimmed flush to the face of the skirting.

Services

Services are incorporated into the **GypFloor SB** system by allowing a gap in the sections. The gap should be 25mm from either side of the service, with a total maximum gap of 400mm. If access is required, a floor hatch can be formed from the flooring material, i.e. chipboard, or chipboard and Gyproc Plank. Gypframe Steel Battens should be positioned around the perimeter of the hatch to support the hatch and the main floor. As a guide, the maximum hatch size should not be greater than the batten spacing (maximum of 400mm x 400mm or 600mm x 600mm).

For full installation details, refer to the British Gypsum **SITE** BOOK, available to download from www.british-gypsum.com

For full installation details, refer to the British Gypsum **SITE BOOK**, available to download from www.british-gypsum.com

Installation overview - GypFloor SB on an uneven concrete substructure

Where GypFloor SB is specified for installation onto an uneven concrete or screed sub-structure, Gypframe SB4 Levelling Cradles and Gypframe SB5 Levelling Packers can be used to level the floating floor treatment. Where battens are spaced at 400mm centres, levelling cradles should be set at 600mm or 450mm centres, for 50mm and 70mm battens respectively, along the length of the batten. Levelling packers are inserted within the cradles, as required. Proceed as per guidance on previous page.

Installation overview - British Gypsum ceiling systems compatible with GypFloor SB

Gypframe RB1 Resilient Bar ceiling fixing

Gypframe RB1 Resilient Bars are fixed through their base flange to each joist using 36mm Gyproc Drywall Screws. Gypframe RB1 Resilient Bar noggings are fixed at perimeters. 100mm Isover APR 1200 is laid between joists to rest on the resilient bars. If the bars are not long enough to span the ceiling, butt the ends together directly under a joist and screw-fix through the flange of both ends. Base layer boards are fixed to resilient bars with their long edges at right angles to the resilient bars. Face layer boards are fixed through to all resilient bars. Select an appropriate screw length to ensure that screws do not contact the joists.

CasoLine MF - suspension from concrete soffit

Gypframe MF6 Perimeter Channel is fixed to the wall at maximum 600mm centres, and Gypframe MF12 Soffit Cleats secured to the soffit at 1200mm centres, using appropriate fixings. Gypframe MF8 Strap Hanger or Gypframe GA1 Steel Angles are pre-cut and secured to the soffit cleats with Gypframe MF11 Nut and Bolt. Gypframe MF7 Primary Support Channels are installed over the Gypframe MF6 Perimeter Channels and secured to the hangers.

Gypframe MF5 Ceiling Sections are run at right angles to the underside of primary channels to form the secondary grid. The ceiling sections are secured to the primary channels by Gypframe MF9 Connecting Clips. Boards are fixed to the secondary grid to form single or multi-layer linings as specified.

CasoLine MF - suspension from timber joists

The procedure is the same as concrete except that soffit cleats are not required – hangers are twice fixed directly to the side of the joists.

GypLyner UNIVERSAL - fixing to a concrete soffit

Gypframe GL8 Track is fixed at the perimeter with the longer leg at the bottom. Gypframe GL2 or GL9 Brackets are fixed at the required centres. Gypframe GL1 Lining Channel is located into the perimeter track and each leg of the Gypframe GL2 or GL9 Bracket is screw-fixed to the Gypframe GL1 Lining Channel. The protruding legs of each bracket are bent to sit back from the channel face. Gypframe GL1 Lining Channel sections are joined using Gypframe GL3 Channel Connectors.

GypLyner UNIVERSAL - suspension from timber joists

Gypframe GL5 or GL6 Timber Connectors are fixed to the side of joists using Gyproc Drywall Screws. The connectors must be aligned accurately since they can not be adjusted once Gypframe GL1 Lining Channel is engaged into a row of timber connectors and twisted into position. The channels are located into Gypframe GL8 Track at the perimeter. Gypframe GL1 Lining Channel sections are joined using Gypframe GL3 Channel Connectors.

Additional channel or supplementary framing is installed if required to support fixtures. Boards are fixed to the Gypframe GL1 Lining Channels to form one or two layer linings, as specified.

NB For further details on the British Gypsum **CasoLine MF** and **GypLyner UNIVERSAL** ceiling systems, refer to **section 8 – Floor, ceiling and soffit systems**.

For full installation details, refer to the British Gypsum **SITE BOOK**, available to download from www.british-gypsum.com

Performance (▶ Refer to **section 3 - Basic principles of system design**)

Table 1 – GypFloor SB concrete floors

1

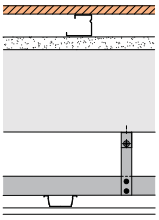

18mm chipboard on Gypframe 50 S 65 Steel Battens. 25mm (minimum) screed applied directly to pre-cast concrete planks. **CasoLine MF** ceiling suspended from concrete planks to create a 140mm cavity. Ceiling linings as in table.

2

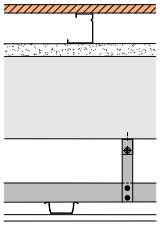

18mm chipboard on Gypframe 70 S 65 Steel Battens. 25mm (minimum) screed applied directly to pre-cast concrete planks. **CasoLine MF** ceiling suspended from concrete planks to create a 140mm cavity. Ceiling linings as in table.

3

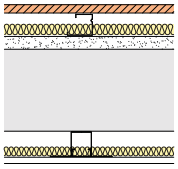

18mm chipboard on Gypframe 50 S 65 Steel Battens. 25mm Isover APR 1200 in batten cavity. 25mm (minimum) screed applied directly to pre-cast concrete planks. **GypLyner UNIVERSAL** ceiling suspended from concrete planks to create a 75mm cavity. 25mm Isover APR 1200 in ceiling cavity. Ceiling linings as in table.

4

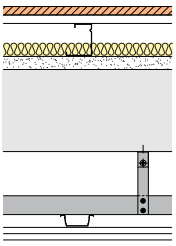

18mm chipboard, one layer of Gyproc Plank on Gypframe 70 S 65 Steel Battens. 25mm Isover APR 1200 in batten cavity. 25mm (minimum) screed applied directly to pre-cast concrete planks. **CasoLine MF** ceiling suspended from concrete planks to create a 140mm cavity. Ceiling linings as in table.

5

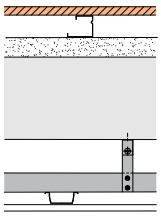

18mm chipboard, Gypframe Steel Battens. 40mm (minimum) screed applied directly to pre-cast concrete planks. **CasoLine MF** ceiling suspended from concrete planks to create a 100mm cavity. Ceiling linings as in table.

Detail	Floating floor depth mm	Board type mm	Lining thickness mm	Concrete plank thickness mm	Concrete plank weight kg/m²	Sound insulation Airborne R_w (R_w + Ctr) dB	Impact L_{nw} dB	System reference
1	68	SoundBloc	1 x 12.5	150	300	65 (53)	51	C100031
2	88	SoundBloc	1 x 12.5	150	300	66 (56)	50	C100030
3	68	SoundBloc	1 x 12.5	150	300	67 (56)	48	C100025
4	107	SoundBloc	2 x 12.5	150	300	71 (61)	43	C100026
5	68	WallBoard	1 x 12.5	150	300	RD[1]	RD[1]	RD[1]

[1] RD = Approved Robust Detail specification E-FC-1. For more information, visit www.robustdetails.com

NB Concrete floors are inherently fire resisting and do not usually require additional performance from a ceiling lining. Advice should be sought from the concrete manufacturer for the fire resistance provided.

Performance (▶ Refer to **section 3 - Basic principles of system design**)

EN

Table 2a – GypFloor SB timber joist floors
Solutions to satisfy the requirements of *BS EN 1365-2: 2000*

1

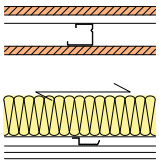

18mm chipboard and one layer of Gyproc Plank, Gypframe 50 S 65 Steel Battens on a 15mm timber sub-deck. Ceiling consisting of Gypframe RB1 Resilient Bars at 450mm maximum centres. 100mm Isover APR 1200 in the cavity. Ceiling linings as in table.

2

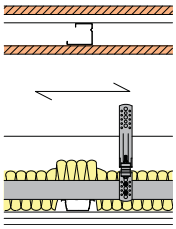

18mm chipboard and one layer of Gyproc Plank, Gypframe 50 S 65 Steel Battens on a 15mm timber sub-deck. **CasoLine MF** ceiling, incorporating Gypframe Acoustic Hangers, with a 287mm cavity. 100mm Isover APR 1200 in the cavity. Ceiling linings as in table.

3

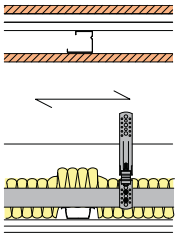

18mm chipboard and two layers of Gyproc Plank, Gypframe 50 S 65 Steel Battens on a 15mm timber sub-deck. **CasoLine MF** ceiling, incorporating Gypframe Acoustic Hangers, with a 287mm cavity. 100mm Isover APR 1200 in the cavity. Ceiling linings as in table.

Detail	Floating floor depth mm	Board type	Lining thickness mm	Joist centres mm	Joist size mm	Sound insulation Airborne R_w (R_w + Ctr) dB	Sound insulation Impact L_{nw} dB	System reference
60 minutes fire resistance EN								
1	87	SoundBloc	2 x 15	450	195 x 45	64 (53)	54	C106030
2	87	SoundBloc	2 x 15	450	195 x 45	67 (55)	50	C106035
3	106	SoundBloc	2 x 15	450	195 x 45	68 (56)	48	C106036

NB Where a double layer of 15mm Gyproc SoundBloc is specified, it is also acceptable to use a combination of 19mm Gyproc Plank and 12.5mm Gyproc SoundBloc as an alternative ceiling specification.

Table 2b – GypFloor SB timber joist floors
Solutions to satisfy the requirements of *BS 476: Part 21: 1987*

1

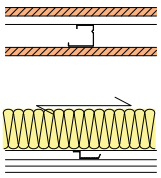

18mm chipboard, one layer of Gyproc Plank, Gypframe 50 S 65 Steel Battens on a 15mm timber sub-deck. Ceiling consisting of Gypframe RB1 Resilient Bars at 450mm maximum centres. 100mm Isover APR 1200 in the cavity. Ceiling linings as in table.

2

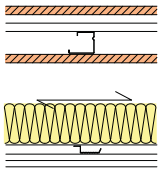

18mm chipboard, two layers of Gyproc Plank, Gypframe 50 S 65 Steel Battens on a 15mm timber sub-deck. Ceiling consisting of Gypframe RB1 Resilient Bars at 450mm maximum centres. 100mm Isover APR 1200 in the cavity. Ceiling linings as in table.

3

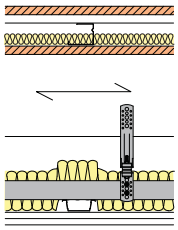

22mm chipboard, one layer of Gyproc Plank, Gypframe 50 S 65 Steel Battens on a 15mm timber sub-deck. 25mm Isover APR 1200 in batten cavity. **CasoLine MF** ceiling, incorporating Gypframe Acoustic Hangers, with a 262mm cavity. 100mm Isover APR 1200 in the cavity. Ceiling linings as in table.

4

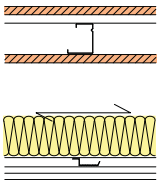

18mm chipboard, one layer of Gyproc Plank, Gypframe 70 S 65 Steel Battens on a 15mm timber sub-deck. Ceiling consisting of Gypframe RB1 Resilient Bars at 450mm maximum centres. 100mm Isover APR 1200 in the cavity. Ceiling linings as in table.

5

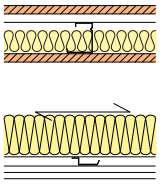

18mm chipboard, one layer of Gyproc Plank, Gypframe 70 S 65 Steel Battens on a 15mm timber sub-deck. 50mm Isover APR 1200 in batten cavity. Ceiling consisting of Gypframe RB1 Resilient Bars at 450mm maximum centres. 100mm Isover APR 1200 in the cavity. Ceiling linings as in table.

Detail	Floating floor depth mm	Board type	Lining thickness mm	Joist centres mm	Joist size mm	Sound insulation Airborne R_w (R_w + Ctr) dB	Impact L_{nw} dB	System reference
60 minutes fire resistance BS								
1	87	Plank + SoundBloc	19 + 12.5	450	235 x 50	65 (51)	48	C106031
2	106	Plank + SoundBloc	19 + 12.5	450	195 x 45	66 (55)	51	C106033
3	91	FireLine	2 x 12.5	450	195 x 45	65 (55)	49	C106034
4	107	Plank + SoundBloc	19 + 12.5	450	235 x 50	66 (53)	49	C106032
5	107	Plank + SoundBloc	19 + 12.5	450	235 x 50	69 (56)	48	C106039

NB Where a combination of 19mm Gyproc Plank and 12.5mm Gyproc SoundBloc is specified, it is also acceptable to use a double layer of 15mm Gyproc SoundBloc as an alternative ceiling specification.

Design

Planning - key factors
The GypFloor SB floating floor treatment is installed onto a structural timber or concrete floor. The minimum height of the finished system is 68mm onto a screeded concrete or 87mm on to a timber sub-deck. The overall depth of the installed ceiling linings will be 16mm plus the thickness of the lining boards from the underside of the joists when specifying Gypframe RB1 Resilient Bar. Ceiling linings should be fixed prior to any installation of drylining or plastering on walls.

In refurbishment work, the level of existing joists should be checked. Their upper surfaces should be reasonably level and straight for the flooring application. If there is misalignment of their lower surfaces, consideration should be given to using a GypLyner UNIVERSAL or CasoLine MF suspended ceiling to support the ceiling boards.

Structural
GypFloor SB is a floating floor treatment for residential separating floors. Self-contained residential units are subject to imposed floor loads of 1.5kN/m^2 (uniformly distributed loads) and 1.4kN (point loads).

GypFloor SB can be specified within self-contained dwelling units, bedrooms within hotels and student accommodation, and communal areas of apartment blocks up to three storeys in height. Gypframe Steel Battens should be laid in accordance with *BS 8201*. Batten spacing closer than that recommended in *BS 8201* may be necessary where heavy items are to be located, or the system is to be used within areas of high loading. Areas of high loading can include communal areas of high-rise residential developments where imposed loads can exceed 3.0kN/m^2 (distributed load) and 4.5kN (point load).

The Code for Sustainable Homes
GypFloor SB can be specified in conjunction with a range of British Gypsum ceiling systems to achieve enhanced levels of acoustic performance. Credits can be awarded under the Code for Sustainable Homes if separating elements achieve higher standards of sound insulation than those given in Building Regulations Approved Document E.

Flanking transmission
Care should be taken to ensure that the associated structure is suitable to achieve the level of sound insulation required. Particular reference to Building Regulations should be made as regards the use of this floor type and the requirements of the surrounding structure. Where the walls supporting the floor weigh less than 365kg/m^2 the use of an acoustic shield lining to the walls should be considered. Flanking detail specifications are given in the current British Gypsum **Home**Spec publication, available to download from www.british-gypsum.com

Services
The installation of services within the floor zone should be carried out so as to allow easy access from above.

Board finishing
▶ Refer to **section 13 – Finishing systems and decorative effects**.

▶ Please refer to **section 3 - Basic principles of system design** for general guidance

Construction details

1 Typical batten layout

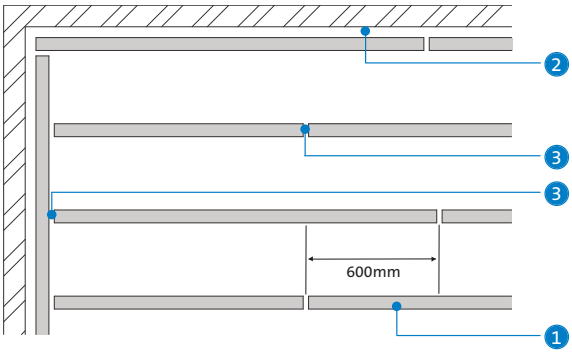

2 Service installation

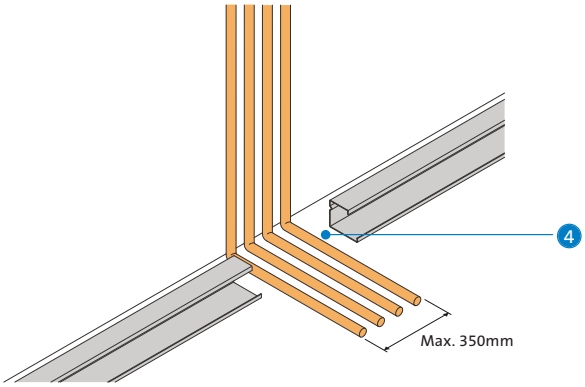

NB Services are incorporated within **GypFloor SB** by allowing a gap in the battens. Service layout should be designed to maintain 400mm maximum spacing between battens.

3 Typical layout (19mm x 2400mm x 600mm Gyproc Plank on battens at 400mm centres)

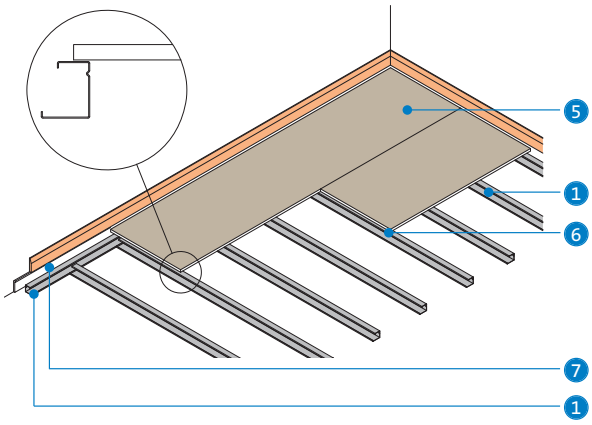

4 Typical layout (2400mm x 600mm tongue and groove chipboard on Gyproc Plank)

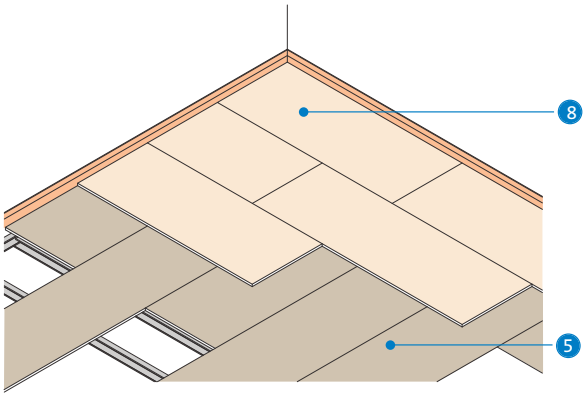

NB Apply glue to the chipboard joints (as recommended by the chipboard manufacturer)

5 Loadbearing partitions

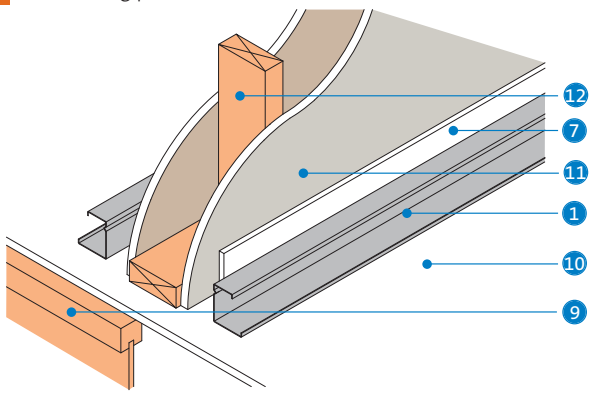

NB Loadbearing partitions should be erected directly onto the sub-floor.

6 Non-loadbearing partitions

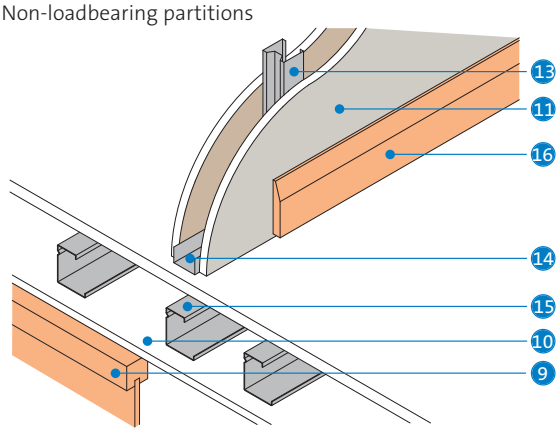

NB Non-loadbearing partitions can be erected onto **GypFloor SB**. Provision should be made in the layout to allow a Gypframe Steel Batten beneath the partition to give support and a fixing ground.

1. Gypframe Steel Batten
2. 50mm gap between Gypframe Steel Batten and room perimeter
3. 25mm gap between battens
4. 25mm gap between services and battens
5. Gyproc Plank
6. Board edges supported by a batten
7. Gypframe SB3 Flanking Strip
8. Chipboard
9. Timber joist
10. Timber sub-deck
11. Gyproc plasterboard
12. Timber stud
13. Gypframe AcouStud
14. Gypframe Floor & Ceiling Channel
15. Gypframe Steel Batten providing support for fixing channel
16. Skirting

NB Gypframe SIF5 Floor Screws are recommended (at 600mm centres) for fixing the walking surface to the battens. This prevents movement of the chipboard walking surface, particularly in rooms of a larger area (>10m²).

Construction details

7 Areas of high loading

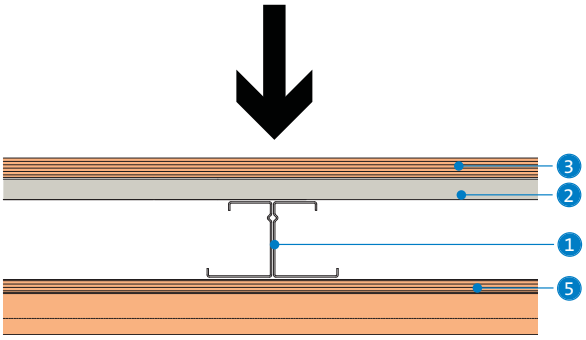

NB Back-to-back Gypframe Steel Battens may be necessary to support heavy items and in areas of high loading (e.g. bathrooms and communal areas of high-rise residential developments).

8 Typical timber floor section

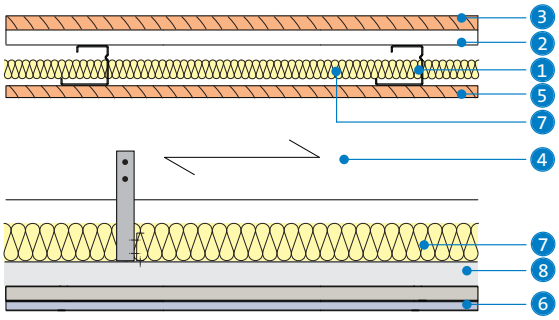

9 Typical concrete floor section

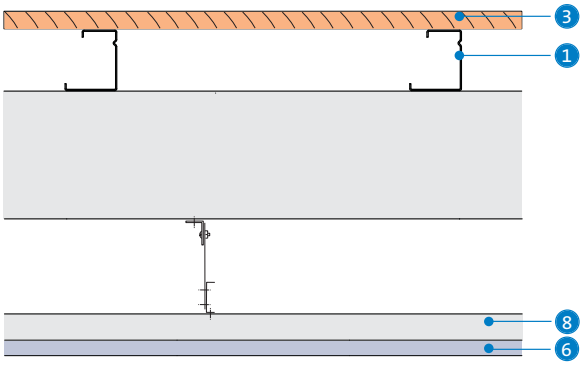

1 Gypframe Steel Batten
2 Gyproc Plank
3 Chipboard walking surface
4 Timber joist
5 Timber sub-deck
6 Gyproc SoundBloc
7 Isover insulation
8 **CasoLine MF** ceiling

NB The design loadings for self-contained dwellings, as defined in *BS 6399: Part 1*, are: Uniformly distributed load = 1.5kN/m²; Concentrated point load = 1.4kN. **GypFloor SB**, incorporating battens at 400mm centres and perimeter battens, can support these design loadings.

SoffitLine

Thermal lining system for semi-exposed soffits

This section includes updated information, added since it was first published in July 2009. Please see the WHITE BOOK update document for details.
Last updated 21/01/2011

Selfridges, Bullring, Birmingham

SoffitLine

SoffitLine combines the benefits of Glasroc F MULTIBOARD with thermally efficient phenolic foam insulation. It can be directly fixed to the underside of semi-exposed soffits. Alternatively SoffitLine can be fixed utilising the **GypLyner UNIVERSAL** or **CasoLine MF** systems. The smooth, off-white surface finish of Glasroc F SOFFITLINE makes it ideal for car parks and basements where the panels can be left undecorated.

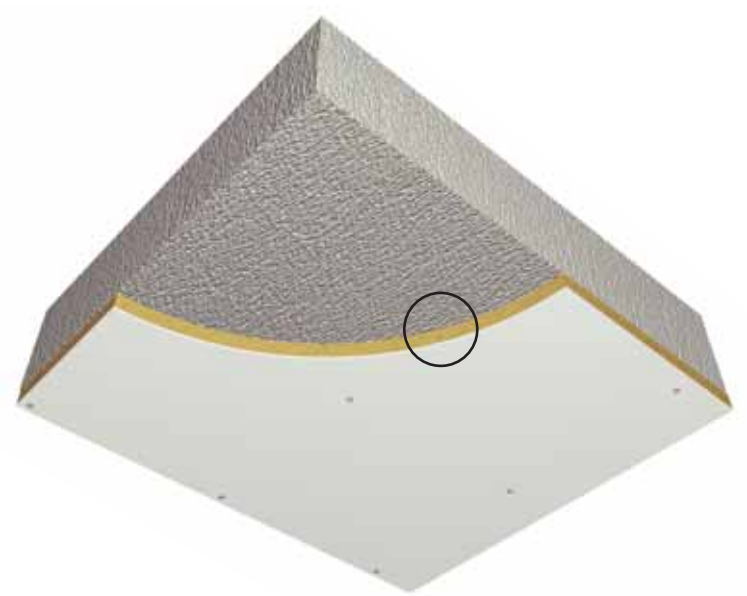

Glasroc
F SOFFITLINE

Key facts

- Ideal for semi-exposed situations
- Smooth, durable surface
- High thermal efficiency
- Can be left undecorated
- Low smoke obscuration in the event of fire

Applications

Fixed to the underside of semi-exposed soffits, i.e. car parks below occupied space.

Sector

- ✓ Office / commercial
- ✓ Apartment buildings
- ✓ Retail
- ✓ High-rise multi-occupancy
- ✓ Sport and leisure

System components

Board products

Glasroc F SOFFITLINE

Thickness	26, 36, 46, 56, 76, 86mm
Width	1200mm
Length	2400mm

Fixing options

Option 1 - fixing to GypLyner UNIVERSAL

Gypframe GL1 Lining Channel — **Length** 2400, 2700, 3000, 3600mm

Gypframe GL8 Track — **Length** 3600mm

Gypframe GL2 Brackets — **Length** 195mm

or

Gypframe GL9 Brackets — **Length** 295mm

or

Gypframe GL12 Brackets — **Length** 395mm

Gyproc Drywall Screws[1]
For fixing Glasroc F SOFFITLINE to metal framing.

Option 2 - fixing to CasoLine MF

Gypframe MF5 Ceiling Section — **Length** 3600mm

Gypframe MF6 Perimeter Channel — **Length** 3600mm

Gypframe MF7 Primary Support Channel — **Length** 3600mm
Primary support section.

Gyproc Drywall Screws[1]
For fixing Glasroc F SOFFITLINE to metal framing.

Option 3 - fixing direct to soffit

Proprietary concrete fixings (by others)

Option 4 - fixing via timber battens

Gyproc Drywall Timber Screws[1]
For fixing to timber sub-structure.

Finishing products

Screw caps (by others)

[1] 86mm thick Glasroc F SOFFITLINE should be fixed using a proprietary fixing, by others, providing a minimum 10mm penetration into metal sections and 25mm penetration into timber. 66mm and 76mm thick Glasroc F SOFFITLINE should be fixed using proprietary fixings by others, providing minimum 25mm penetration into timber.

Installation overview

The following installation methods are based on 600mm framing centres and 600mm board fixing centres for use under normal environmental conditions within a deflection criteria of L/300. In more onerous environmental conditions, the board deflection between framing / fixing centres may exceed 2mm (L/300). If this is unacceptable, or a more stringent deflection criterior is required, irrespective of the environmental conditions, reducing the framing centres and board fixing centres will be necessary, e.g. for L/400, framing should be installed at 400mm centres and board fixings at 230mm centres.

Fixing Glasroc F SOFFITLINE to metal framing
If using CasoLine MF then Gypframe MF5 Ceiling Section is twice fixed directly to the concrete soffit at 600mm centres using suitable proprietary fixings. See Construction details – 2.

CasoLine MF can be used to create deeper plenum depths where required.
▶ Refer to section 8 – CasoLine MF.

If using GypLyner UNIVERSAL then Gypframe GL1 Lining Channels are positioned at 600mm centres via Gypframe GL2, GL9 or GL12 Brackets. The Gypframe GL9 and GL12 Brackets provide a greater stand-off than the Gypframe GL2 Bracket, to allow for deeper service routings. Glasroc F SOFFITLINE is installed transverse to channel sections using Gyproc Drywall Screws inserted at 600mm centres. See Construction details – 3.

Fixing Glasroc F SOFFITLINE to timber battens
Timber battens are fixed to the soffit at 600mm centres using suitable proprietary fixings. Glasroc F SOFFITLINE is fixed to the timber using Gyproc Drywall Timber Screws at 600mm centres.

Fixing directly to the concrete soffit
Glasroc F SOFFITLINE can be fixed using suitable proprietary anchors at 600mm centres around the perimeter of each board (edges and ends) and in the field of the boards.

NB There is a risk of pattern staining where temperature, humidity, and airborne pollutants are extreme.

For full installation details, refer to the British Gypsum **SITE BOOK**, available to download from www.british-gypsum.com

Performance

Reaction to fire
Both Glasroc F MULTIBOARD and the phenolic foam surfaces achieve Class 0 ratings when tested to *BS 476: Part 6* and *Part 7*. The product is also designated Euroclass B for the purposes of Building Regulations.

Phenolic foam has an obscuration of less than 5% when tested to *BS 5111: Part 1 Methods of testing for determination of smoke generation characteristics of cellular plastics and cellular rubber materials.*

Moisture resistance
The Glasroc F MULTIBOARD element absorbs less than 5% of water, by weight, after 120 minutes total immersion to *BS EN 15283-1*. When immersed in water for 120 minutes and re-dried, the board strength is the same as before wetting.

Thermal conductivity
Glasroc F MULTIBOARD - 0.30W/mK
Phenolic foam - ranging from 0.021W/mK to 0.024W/mK
▶ Refer to **section 14 – Products, Boards.**

Light reflectance
Glasroc F MULTIBOARD surface finish has a high light reflectance (>70%), making it the recommended solution for use in areas such as car parks, where ambient lighting is used.

Table 1 – Resistance of a low emissivity cavity[1]

Cavity of minimum depth 25mm	
Heat flow down	= 0.5 m^2K/W
Heat flow up	= 0.34 m^2K/W
Heat flow horizontal	= 0.44 m^2K/W

[1] Created by foil facing on Glasroc F SOFFITLINE.

Table 2 – SoffitLine thermal resistance (R) values

Board thickness mm	Width mm	Length mm	Weight Kg/m^2	Thermal resistance m^2K/W
26	1200	2400	7.0	0.85
36	1200	2400	7.5	1.32
46	1200	2400	8.0	1.76
56	1200	2400	8.5	2.40
66	1200	2400	9.0	2.88
76	1200	2400	9.5	3.35
86	1200	2400	10.0	3.83

▶ Refer to **section 14 – Products, Boards.**

Design

Services
The cavity between Glasroc F SOFFITLINE and the background can be used to incorporate services. Services should not be chased into the phenolic insulation.

Give consideration to the depth of framing to suitably accommodate service requirements.

Electrical
The installation of electrial services should be carried out in accordance with *BS 7671*.

Fixtures
The fixing device selected should be long enough to give adequate penetration into the soffit. For further information contact the proprietary fixing manufacturer.

Surface uniformity
Whilst every effort is made during manufacture to maintain uniformity of colour and texture of the surface of Glasroc F SOFFITLINE, there may be slight variations. British Gypsum is therefore unable to guarantee exact matching.

Cavity fire barriers
Where necessary, provision should be made for cavity barriers at regular 20m intervals in areas of undivided concealed space.
▶ Refer to **section 10 – Cavity fire barriers.**

Exposure
Glasroc F SOFFITLINE is suitable for semi-exposed applications, such as soffits and car parks. During construction, it is acceptable for Glasroc F SOFFITLINE to be temporarily exposed to direct rainfall, or other sources of water, so long as drying out has occurred prior to decoration. The phenolic foam insulation has a closed cell structure providing it with good resistance to moisture.

Condensation control
Glasroc F SOFFITLINE can offer significant resistance to water vapour transmission. The phenolic foam insulation is faced with foil that acts as a vapour control membrane. Board joints are taped and filled in accordance with British Gypsum's standard recommendations.

The boards achieve a water vapour resistance of 100MNs/g.

Surface condensation can occur at cold bridges, such as around openings. The use of Glasroc F SOFFITLINE minimises the risk of surface condensation occuring.

Board finishing
There is no requirement to finish Glasroc F SOFFITLINE.

Screw caps (by others) can be considered for an improved surface appearance.

▶ Refer to **section 13 – Finishing systems and decorative effects.**

▶ Please refer to **section 3 - Basic principles of system design** for general guidance

NBS work section K10 - Plasterboard drylinings / partitions / ceilings

Construction details

1 Fixing to metal or timber framing

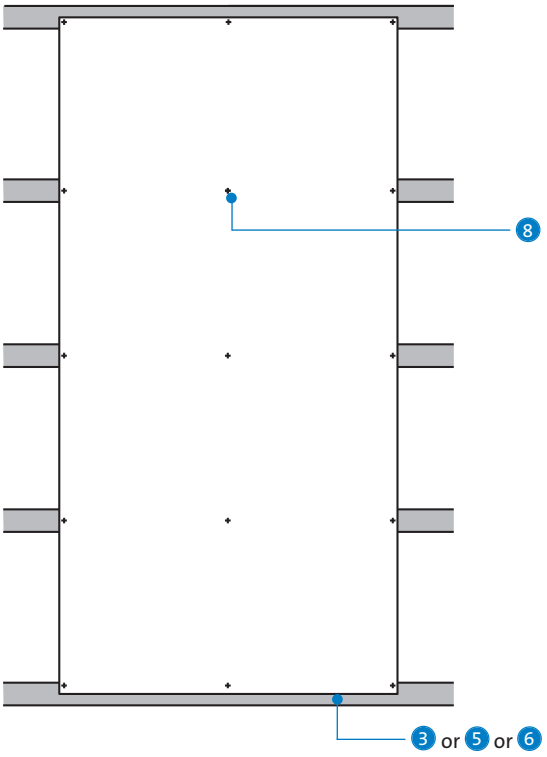

2 Fixing to **CasoLine MF** components

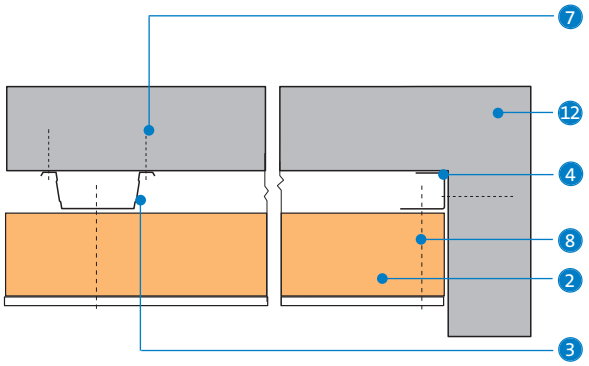

3 Fixing **GypLyner UNIVERSAL** perpendicular to profiled metal deck

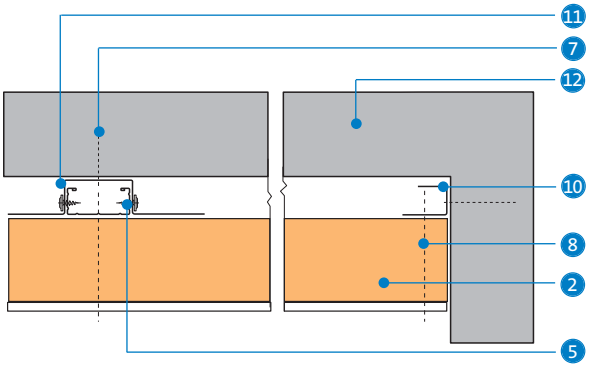

4 Fixing to timber battens

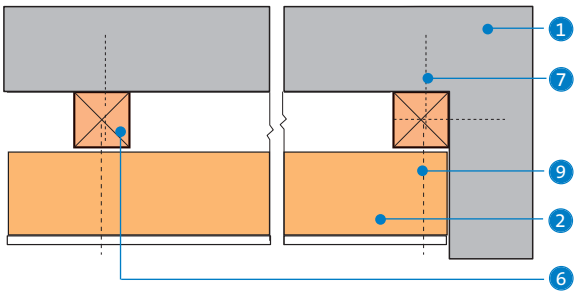

5 Direct fix

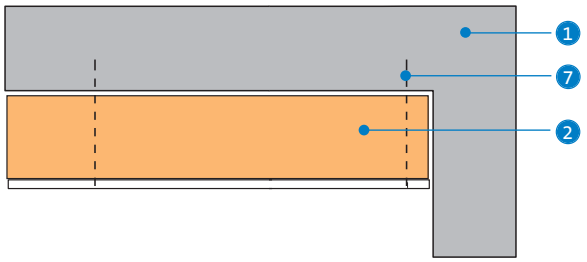

1. Concrete soffit
2. Glasroc F SOFFITLINE
3. Gypframe MF5 Ceiling Section
4. Gypframe MF6 Perimeter Channel
5. Gypframe GL1 Lining Channel
6. Timber battens
7. Concrete fixing
8. Gyproc Drywall Screws
9. Gyproc Drywall Timber Screws
10. Gypframe GL8 Track
11. Gypframe GL2 / GL9 Brackets
12. Profiled metal deck

FireCase

Frameless structural steel encasement system

This section includes updated information, added since it was first published in July 2009. Please see the WHITE BOOK update document for details.
Last updated 21/01/2011

Manchester Civil Justice Centre

FireCase

30 – 180 mins

FireCase frameless encasement system provides a high quality cladding to structural steel, and offers up to 120 minutes fire protection (180 minutes can be achieved using Glasroc F FIRECASE in a framed solution - refer to GypLyner ENCASE for details). The system affords protection to universal steel columns and beams, together with many joist and castellated beam sections.

It can be used in any type of building where an encasement is required to structural steelwork. The Glasroc F FIRECASE lining provides a smooth, robust surface with no requirement to joint or apply a decorative treatment.

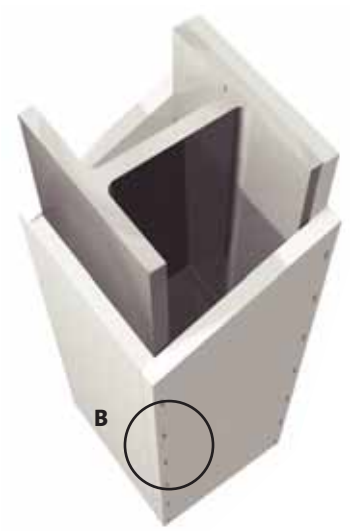

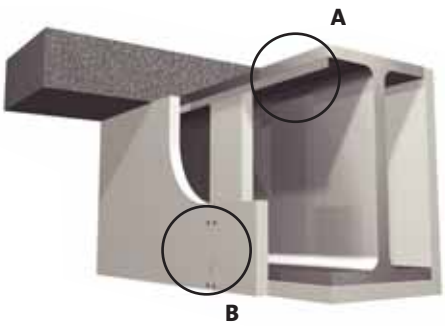

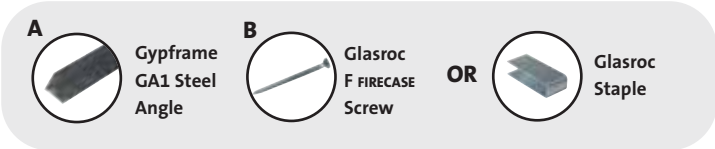

Key facts

- Non-combustible system
- Glasroc F FIRECASE cladding provides a smooth, impact resistant surface
- Option of staple-fixing for faster installation
- High levels of fire protection to structural steel
- Can be installed early in the building programme
- Simple and quick to install
- BBA Approved (93/2935)
- Listed in Association of Specialist Fire Protection Yellow Book and Loss Prevention Council Board Red Book

Applications

Encasement of structural steel.

Sector

- ✓ Office / commercial
- ✓ Education
- ✓ Custodial
- ✓ Retail
- ✓ Healthcare
- ✓ High-rise multi-occupancy
- ✓ Sport and leisure
- ✓ Industrial
- ✓ Auditoria

System components

Gypframe metal products

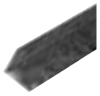

GA1 Steel Angle	Length
	2900mm

Board products

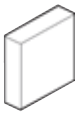

Glasroc F FIRECASE

Thickness	15, 20, 25, 30mm
Width	600, 1200mm
Length	2000, 2400, 3000mm

Fixing and finishing products

Glasroc Staples
50mm long. Use with cordless Glasroc Impulse Staple Gun for board-to-board fixing (except 30mm board).

or

Glasroc F FIRECASE Screws - 40, 50, 58, 70mm
For board-to-board and board-to-metal fixing.

Gyproc Drywall Metal Angle Bead
For reinforcing external angles where maximum protection is required.

or

Gyproc No-Coat Ultraflex 325
High performance drywall corner reinforcement.

Gyproc Joint Cement
For decorative seamless jointing.

Thistle Board Finish or Thistle Multi-Finish
To provide a plaster skim finish.

or

Thistle Durafinish
To provide improved resistance to accidental damage.

Installation overview

Glasroc fixings
Glasroc F FIRECASE boards can be fixed with Glasroc Staples or Glasroc F FIRECASE Screws. Consult **Table 1** to establish the minimum length of fixing.

Four-sided protection to steel columns
Cladding is commenced from the base of the column. See **Construction details – 1**. Boards are positioned and staple-fixed board-to-board using a Glasroc Impulse Staple Gun (or similar) or alternatively using Glasroc F FIRECASE Screws of appropriate length. Board joints on adjacent sides are staggered by a minimum 600mm. For double layer linings, board joints are staggered between layers by a minimum 300mm.

Three-sided protection to steel columns incorporating steel angles
Gypframe GA1 Steel Angle is fixed to the wall both sides of the column. Additional steel angles are incorporated where the column flange is at right angles to the wall structure. See **Construction details – 2**. Boards are positioned and screw-fixed to the steel angles. Board-to-board fixings are made by staples or using Glasroc F FIRECASE Screws. For double layer linings, board joints are staggered between layers.

Three-sided protection to steel beams incorporating steel angles
The procedure is as for columns except that for single layer encasements, fascia board joints are backed with Glasroc F FIRECASE. Strips of Glasroc F FIRECASE are cut to a minimum 60mm width and staple or screw-fixed behind fascia board-ends, so as to half-lap the joints. See **Construction details – 5**.

Three-sided protection to steel columns and beams incorporating Glasroc F FIRECASE soldiers to support single layer linings providing up to 90 minutes fire protection
Glasroc F FIRECASE soldiers are pre-cut to fit neatly into the steel section. See **Construction details – 3** and **6**. The soldiers are located into both sides of the section at 1200mm maximum centres as boarding progresses. At fascia board joints, two soldiers are fitted side by side so that each one finishes flush with the board-end. Cladding is fixed to each joint soldier and also any intermediate soldiers using three staples or Glasroc F FIRECASE Screws. Boarding is continued as previously, staggering board joints.

NB Boards are cut using a suitable mechanical saw. Board fixings throughout (including fixings to steel angles) are at 150mm centres. Steel angles are fixed at maximum 600mm centres.

NB Jointing and finishing of Glasroc F FIRECASE is not a requirement to meeting the specified fire protection period.

Table 1 - Specialist board fixings

Board thickness (mm)	Minimum fixing length Board-to-board fixing	Board-to-metal fixing
15	40mm Glasroc F FIRECASE Screws or 50mm Glasroc Staples	40mm Glasroc F FIRECASE Screws
20	50mm Glasroc F FIRECASE Screws or 50mm Glasroc Staples	40mm Glasroc F FIRECASE Screws
25	58mm Glasroc F FIRECASE Screws or 50mm Glasroc Staples	40mm Glasroc F FIRECASE Screws
30	70mm Glasroc F FIRECASE Screws	40mm Glasroc F FIRECASE Screws
15 + 20	40mm and 50mm Glasroc F FIRECASE Screws or 50mm Glasroc Staples	40mm and 50mm Glasroc F FIRECASE Screws

For full installation details, refer to the British Gypsum **SITE BOOK**, available to download from www.british-gypsum.com

Design

Planning - key factors
FireCase steel encasement is suitable for protecting structural steel sections with a section factor A/V (Hp/A) up to 260m^{-1}, calculated on the basis of box protection to three or four sides as required. It will protect universal column and beam sections described in *BS 4: Part 1*, and many joist and castellated beam sections.

Lining selection
The designer should follow the procedure below to determine the thickness of cladding required:

1. Ascertain whether protection is required on three or four sides of the section.
2. Find out what period of fire resistance is required.
3. Refer to the A/V (Hp/A) **Tables 2 - 4**. Locate the steel section to be protected, listed by its size and mass per metre, and read off the section factor A/V.
4. Refer to **Tables 5 - 8**. Locate the A/V value on the vertical scale on the appropriate table. Read across the chart to the column relating to the period of fire resistance required and read off the designated thickness of the relevant cladding required to form the encasement.
5. Select the type of board to be used.

For castellated sections and cellular beams please refer to the Association for Specialist Fire Protection publication, ASFP Yellow Book - 'Fire Protection for Structural Steel in buildings' for guidance, available to download from www.asfp.org.uk

For improved durability and impact resistance, the outer layer of Gyproc FireLine can be replaced with a layer of 15mm Gyproc DuraLine.

Partition fixing
Partitions and wall linings may be fixed directly to the Glasroc F FIRECASE cladding as long as:

1. The fire resistance requirement of the partition is 60 minutes or less.
2. There are no special requirements for pressure resistance, e.g. around lift shafts.
3. There are no special loading requirements, i.e. Heavy Duty or Severe Duty as defined in recognised partition performance specifications (e.g. *BS 5234*). See **Construction details – 9**.

Where these criteria are not met, the partition framing must be suitably fixed to the structural steel section, through the Glasroc F FIRECASE cladding. Where the partition abuts the web of the structural steel, a suitable steel nogging must be provided. See **Construction details – 10**.

Additional support
Where steel section web dimensions exceed 600mm, additional support will be required for the cladding. Please contact the British Gypsum Drywall Academy for guidance.

Tiling
Lightweight tiles can be applied using conventional tile adhesives without pre-treatment of the Glasroc F FIRECASE.

Finishing
▶ Refer to **section 13 – Finishing systems and decorative effects**.

Glasroc F FIRECASE joints can be treated using Gyproc Joint Tape bedded in Gyproc Joint Cement. External angles / corners can be reinforced using Gyproc No-Coat Ultraflex 325 bedded in Gyproc Joint Cement.

If a plaster finish is required, joints should be reinforced and Thistle Board Finish, Thistle Durafinish or Thistle Multi-Finish applied.
▶ Refer to **section 13 – Finishing systems and decorative effects, Plaster skimming.**

Jointing and finishing is not a requirement of meeting the specified fire resistance. Board joints / abutments must be a flush fit.

▶ Please refer to **section 3 - Basic principles of system design** for general guidance

Table 2 - Section factor A/V (Hp/A) of Universal Beams

Serial size mm	Mass / metre kg	3 sides m^{-1}	4 sides m^{-1}
914 x 419[1]	388	45	55
	343	50	60
914 x 305[1]	289	60	65
	253	65	75
	224	75	85
	201	80	95
838 x 292[1]	226	70	80
	194	80	90
	176	90	100
762 x 267[1]	197	70	85
	173	80	95
	147	95	110
686 x 254[1]	170	75	90
	152	85	95
	140	90	105
	125	100	115
610 x 305[1]	238	50	60
	179	70	80
	149	80	95
610 x 229[1]	140	80	95
	125	90	105
	113	100	115
	101	110	130
533 x 210	122	85	95
	109	95	110
	101	100	115
	92	110	125
	82	120	140
457 x 191	98	90	105
	89	100	115
	82	105	125
	74	115	135
	67	130	150
457 x 152	82	105	120
	74	115	130
	67	125	145
	60	140	160
	52	160	180
406 x 178	74	105	125
	67	115	140
	60	130	155
	54	145	170
406 x 140	46	160	185
	39	190	220
356 x 171	67	105	125
	57	125	145
	51	135	165
	45	155	185
356 x 127	39	170	195
	33	195	225
305 x 165	54	115	140
	46	130	160
	40	150	180
305 x 127	48	125	145
	42	140	160
	37	155	180
305 x 102	33	175	200
	28	200	225
	25	225	260
254 x 146	43	120	150
	37	140	170
	31	160	200
254 x 102	28	170	200
	25	190	220
	22	215	250
203 x 133	30	145	180
	25	165	210
203 x 102	23	175	210
178 x 102	19	190	230
152 x 89	16	190	235
127 x 76	13	195	240

[1] These sections are above 600mm deep and will require additional support.

Table 3 - Section factor A/V (Hp/A) of Universal Columns

Serial size mm	Mass / metre kg	3 sides m^{-1}	4 sides m^{-1}
356 x 406	634	15	20
	551	20	25
	467	20	30
	393	25	35
	340	30	35
	287	30	45
	235	40	50
356 x 368	202	45	60
	177	50	65
	153	55	75
	129	65	90
305 x 305	283	30	40
	240	35	45
	198	40	50
	158	50	65
	137	55	70
	118	60	85
	97	75	100
254 x 254	167	40	50
	132	50	65
	107	60	75
	89	70	90
	73	80	110
203 x 203	86	60	80
	71	70	95
	60	80	110
	52	95	125
	46	105	140
152 x 152	37	100	135
	30	120	160
	23	155	205

Table 4 - Section factor A/V (Hp/A) of Universal Joists

Serial size mm	Mass / metre kg	3 sides m^{-1}	4 sides m^{-1}
254 x 203	82	70	90
254 x 114	37	130	155
203 x 152	52	85	105
152 x 127	37	90	120
127 x 114	30	100	130
127 x 114	27	110	140
114 x 114	27	100	135
102 x 102	23	105	140
89 x 89	19	105	145
76 x 76	13	140	185

▶ Please refer to **section 3 - Basic principles of system design** for general guidance

Performance (▶ Refer to **section 3 - Basic principles of system design**)

Table 5 – Solutions to satisfy the 550°C criteria when tested in accordance with *BS 476: Part 20: 1987*

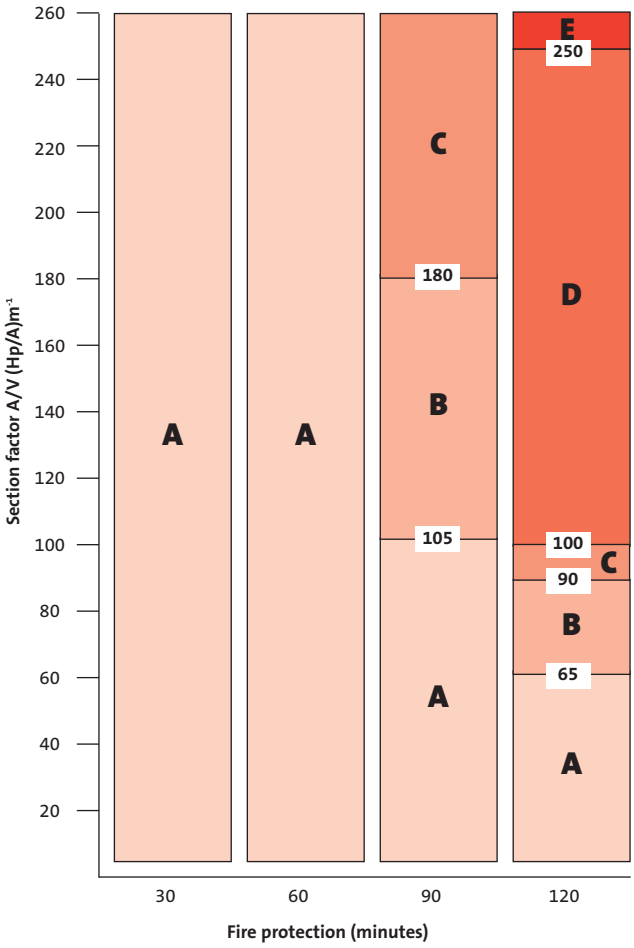

System references D120001 (screwed system)
D120002 (stapled system)

Key - Thickness of Glasroc F FIRECASE required

A	=	15mm
B	=	20mm
C	=	25mm
D	=	30mm
E	=	35mm (15mm + 20mm)

Table 6 – Solutions to satisfy the 550°C criteria when tested in accordance with *BS 476: Part 21: 1987* for columns requiring 180 minutes fire protection using GypLyner ENCASE system

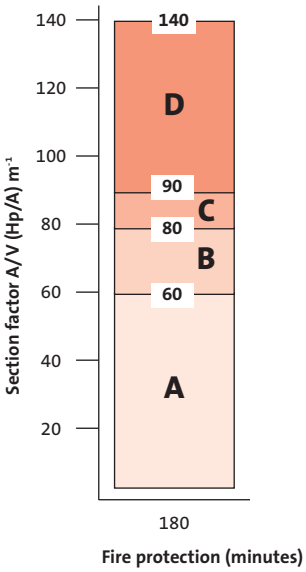

System reference D120003

Key - Thickness of Glasroc F FIRECASE board required

A	=	35mm (20mm + 15mm)
B	=	40mm (20mm + 20mm)
C	=	45mm (25mm + 20mm)
D	=	50mm (25mm + 25mm)

▶ Please refer to **section 3 - Basic principles of system design** for general guidance

Table 7 – Solutions to satisfy the 550°C criteria when tested in accordance with *ENV 13381-4: 2002* (four-sided columns only)

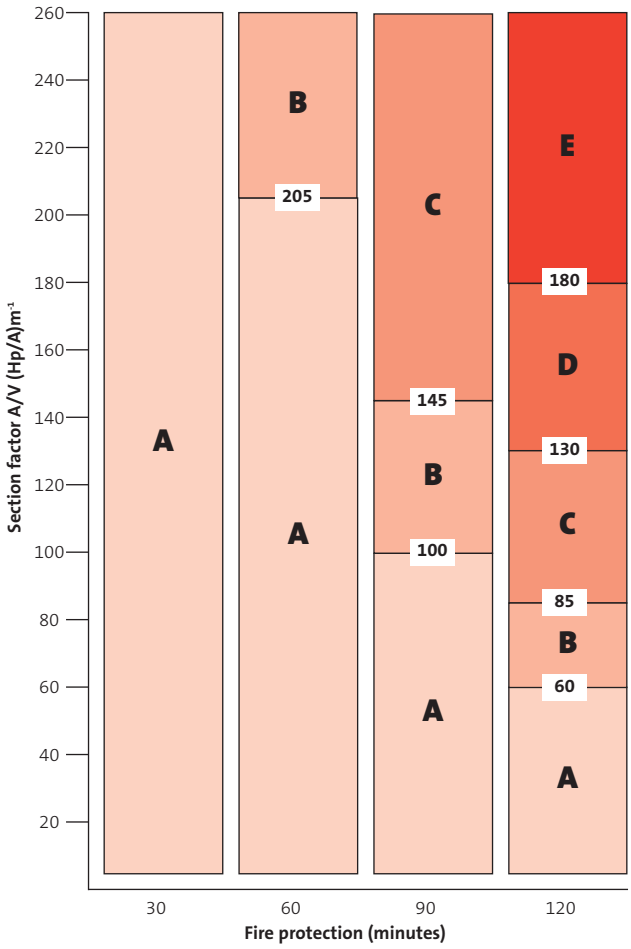

System references D120001 (screwed system)
D120002 (stapled system)

Key - Thickness of Glasroc F FIRECASE required

A	=	15mm
B	=	20mm
C	=	25mm
D	=	30mm
E	=	35mm (15mm + 20mm)

Table 8 – Solutions to satisfy the 620°C criteria when tested in accordance with *BS 476: Part 21: 1987* for beam supporting concrete slabs

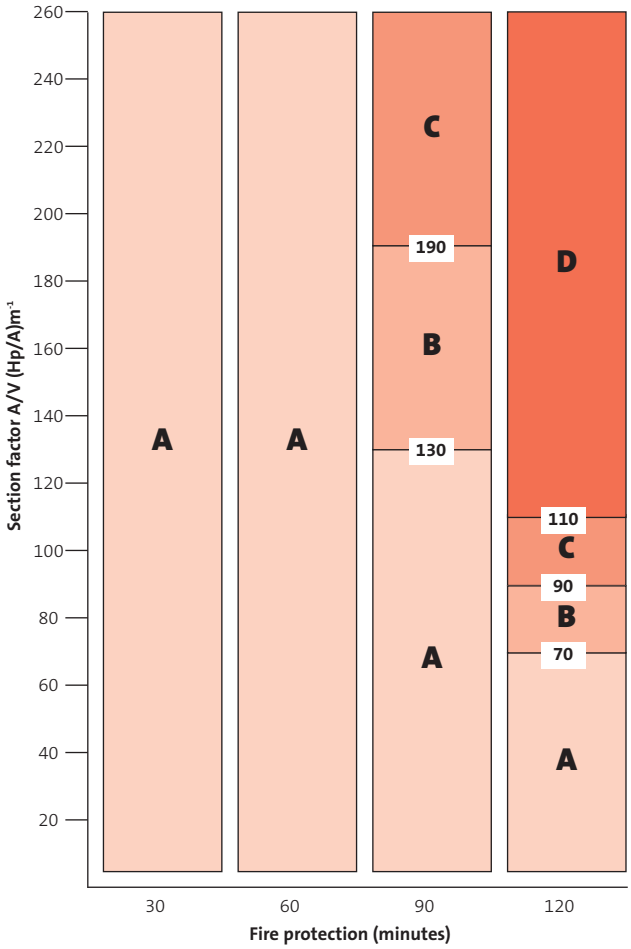

System references D120001 (screwed system)
D120002 (stapled system)

Key - Thickness of Glasroc F FIRECASE board required

A	=	15mm
B	=	20mm
C	=	25mm
D	=	30mm

▶ Please refer to **section 3 - Basic principles of system design** for general guidance

Construction details

1 Four-sided column encasement for up to 120 minutes fire protection

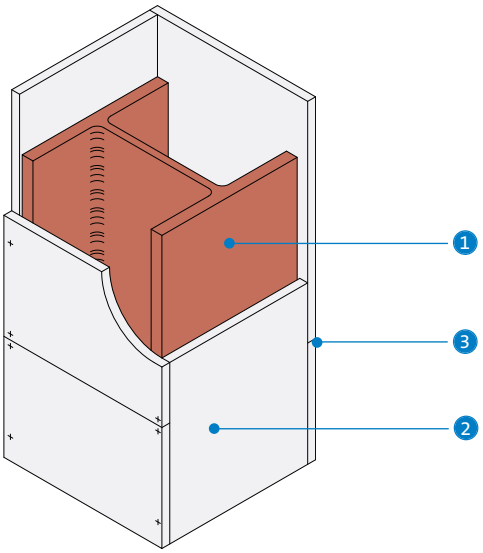

2 Three-sided column encasement incorporating steel angles for up to 120 minutes fire protection

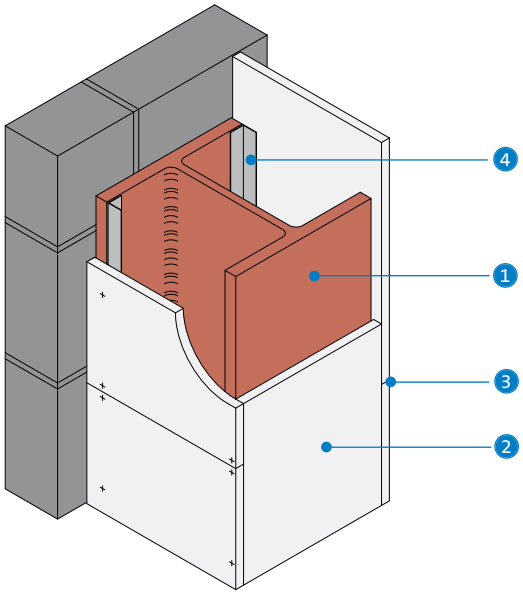

3 Three-sided column encasement incorporating Glasroc F FIRECASE soldiers for up to 90 minutes fire protection

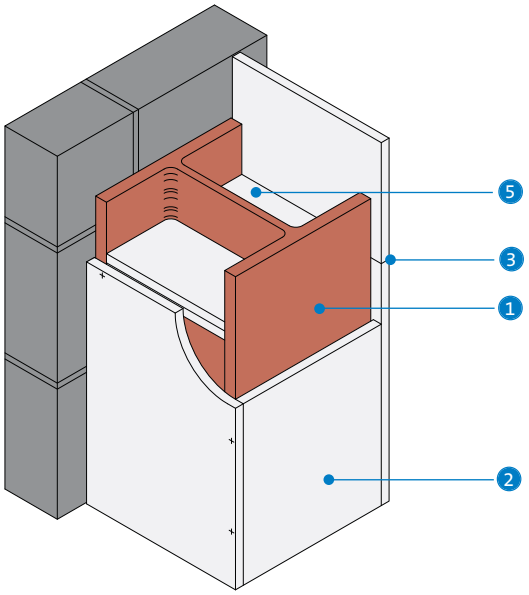

4 Four-sided column encasement for up to 120 minutes fire protection - double layer

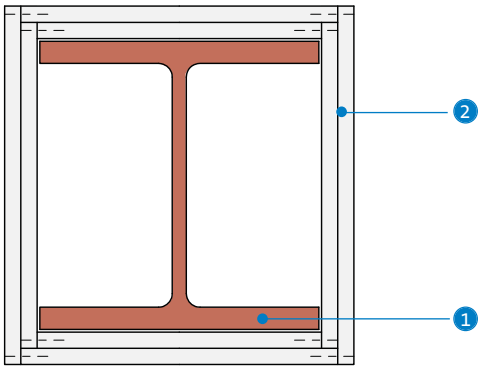

1. Structural steel
2. Glasroc F FIRECASE fixed together with Glasroc F FIRECASE Screws or Glasroc Staples at 150mm centres and fixed to Gypframe GA1 Steel Angle with Glasroc F FIRECASE Screws at 150mm centres
3. Board joints staggered by minimum 600mm between adjacent sides
4. Gypframe GA1 Steel Angle suitably fixed to column flange at 600mm centres
5. Glasroc F FIRECASE soldiers at 1200mm centres (two together at board joints)

Construction details

5 Three-sided beam encasement incorporating steel angles for up to 120 minutes fire protection

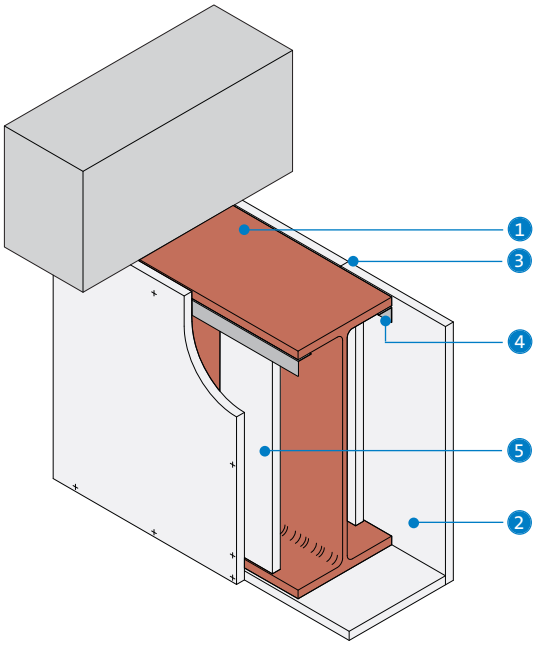

6 Three-sided beam encasement incorporating Glasroc F FIRECASE soldiers for up to 90 minutes fire protection

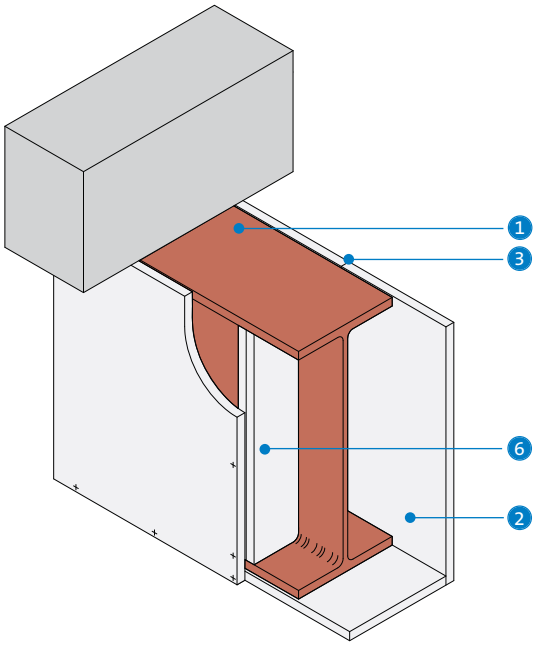

7 Three-sided beam encasement incorporating steel angles for up to 120 minutes fire protection - double layer

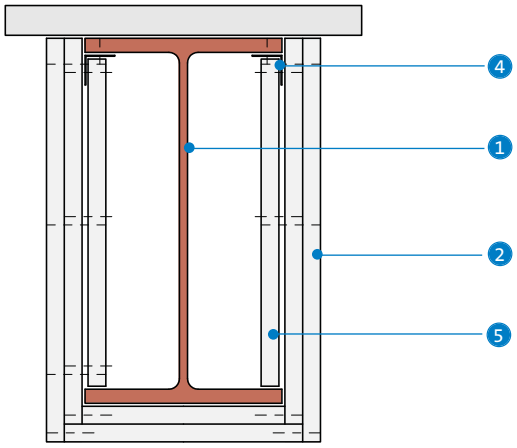

8 Column and beam encasement junction

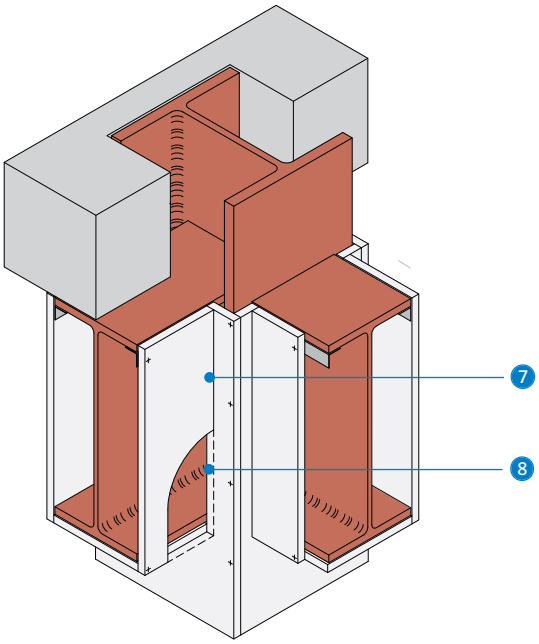

1. Structural steel
2. Glasroc F FIRECASE fixed together and to Gypframe GA1 Steel Angle with Glasroc F FIRECASE Screws at 150mm centres
3. Board joints staggered by minimum 600mm between adjacent sides
4. Gypframe GA1 Steel Angle suitably fixed to beam flange at 600mm centres
5. 60mm wide Glasroc F FIRECASE backing strip
6. Glasroc F FIRECASE soldiers at 1200mm centres (two together at board joints)
7. Beam encasement boards butted tight to column encasement
8. Column encasement boards cut around penetrations

Construction details

9 Column encasement and partition junction for partitions up to 60 minutes fire resistance and *BS 5234* Light and Medium Duty

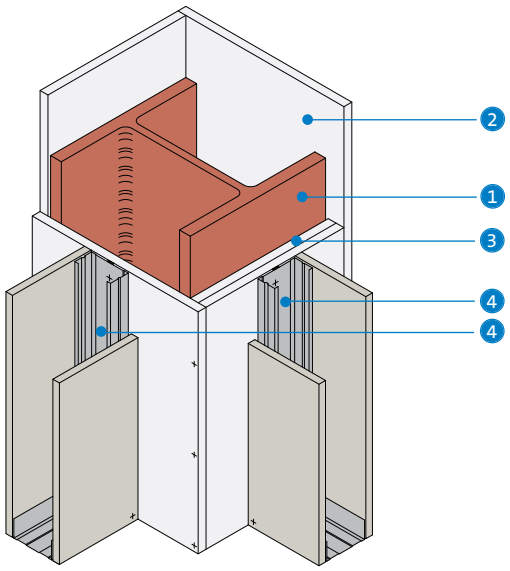

10 Column encasement and partition junction for partitions up to 120 minutes fire resistance and *BS 5234* Heavy and Severe Duty

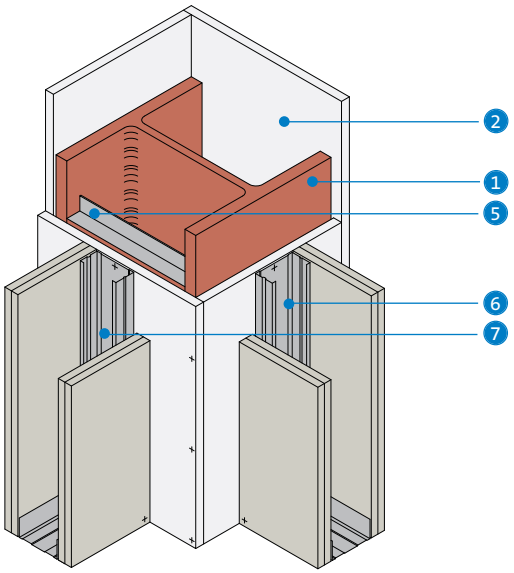

11 Beam encasement and partition junction for partitions up to 60 minutes fire resistance and *BS 5234* Light and Medium Duty

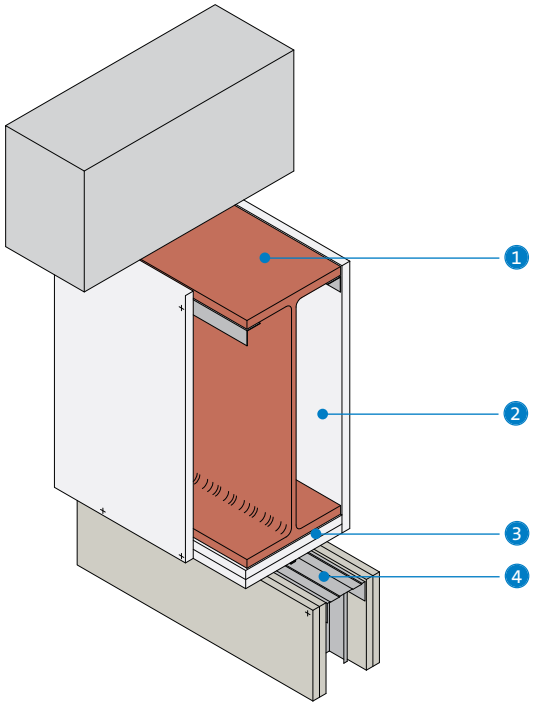

12 Beam encasement and partition junction for partitions up to 120 minutes fire resistance and *BS 5234* Heavy and Severe Duty

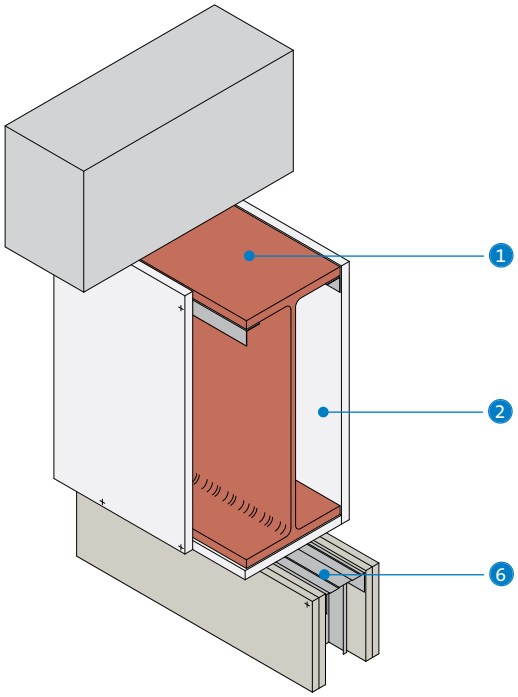

1. Structural steel
2. **FireCase** encasement
3. Additional layer of Glasroc F FIRECASE forming packer to receive partition fixing
4. Gypframe 'C' Stud / Channel bonded to Glasroc F FIRECASE with continuous bead of Gyproc Sealant (two beads for studs wider than 75mm) and fixed with Gyproc Drywall Screws at 600mm centres (in two lines staggered by 300mm for studs wider than 75mm). Allow 24 hours before boarding.
5. Suitable size **Z**-section (by others) fixed between column flanges at 600mm centres
6. Gypframe 'C' Stud / Channel suitably fixed through Glasroc F FIRECASE to structural steel at 600mm centres (in two lines staggered by 300mm for studs wider than 75mm)
7. Gypframe 'C' Stud suitably fixed through Glasroc F FIRECASE to **Z**-sections (in two lines for studs wider than 75mm)

Construction details

13 Column flange projection less than 30mm

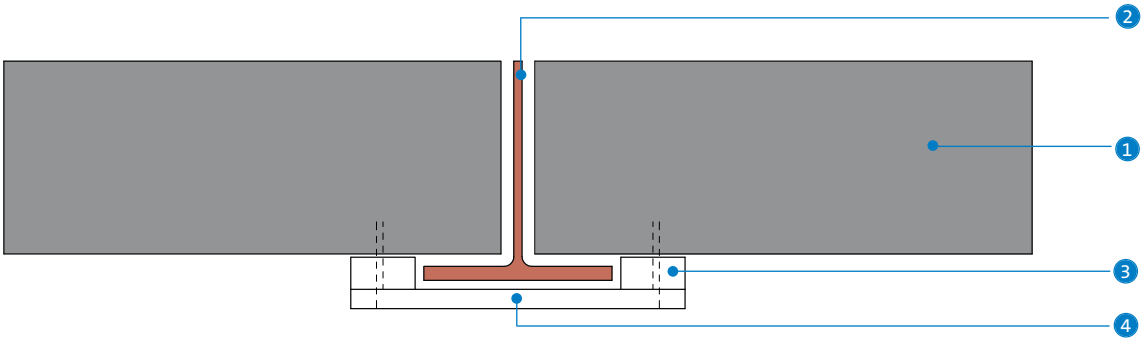

14 Column flange projection less than 30mm using steel angles

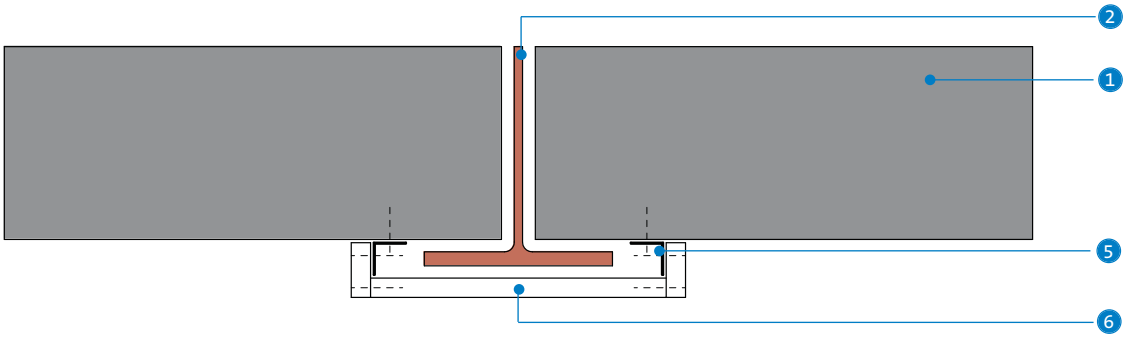

15 Encasement flush with blockwork

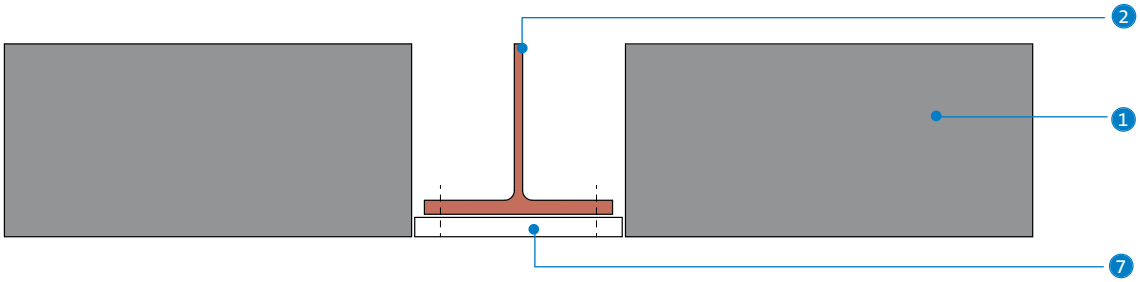

1. Blockwork
2. Structural steel
3. Minimum 50mm wide strip of Glasroc F FIRECASE suitably fixed to blockwork at 1200mm centres
4. Glasroc F FIRECASE suitably fixed through packer to blockwork at 300mm centres
5. Gypframe GA1 Steel Angle suitably fixed to blockwork at 600mm centres
6. Glasroc F FIRECASE fixed together and to Gypframe GA1 Steel Angles with Glasroc F FIRECASE Screws at 150mm centres
7. Glasroc F FIRECASE fixed to column with mechanical steel pin fixings at 300mm centres, in two lines staggered by 150mm

GypLyner ENCASE

GypLyner framed structural steel encasement system

This section includes updated information, added since it was first published in July 2009. Please see the WHITE BOOK update document for details.
Last updated 21/01/2011

Cadbury offices,
Bournville, Birmingham

GypLyner ENCASE

30 – 180 mins

GypLyner ENCASE is a steel encasement system which provides a rapid method of cladding structural steel sections to provide up to 180 minutes fire resistance. The system will protect all universal column and beam sections with flange thicknesses between 6mm and 28mm. As described in the British Gypsum **FIRE** BOOK, GypLyner ENCASE will also protect many joist sections, portal frames, and castellated beam sections. It can be used in any type of building where encasement to structural steel is required.

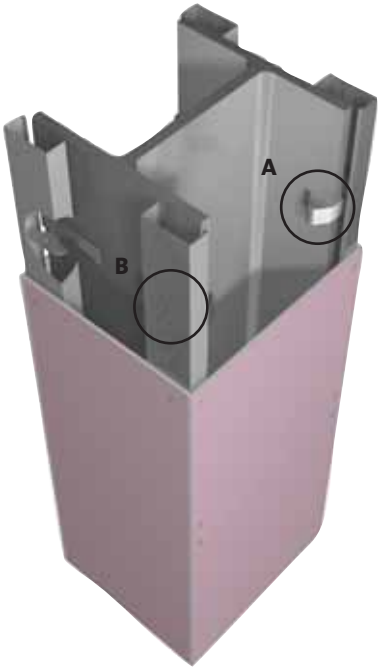

A 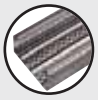 Gypframe GL1 Lining Channel

B Gypframe GL10 GypLyner Steel Framing Clip

Key facts

- Quick and simple to install
- Lightweight support framework constructed from GypLyner components
- Easy to box-out
- Up to 180 minutes fire protection to structural steel

Applications

For the encasement of structural steel.

Sector

- ✓ Office / commercial
- ✓ Education
- ✓ Custodial
- ✓ Retail
- ✓ Healthcare
- ✓ High-rise multi-occupancy
- ✓ Sport and leisure
- ✓ Industrial
- ✓ Auditoria

System components

Gypframe metal products

GL1 Lining Channel

Length
2400, 2700mm
3000, 3600mm

GL3 Channel Connector

GL10 GypLyner Steel Framing Clips

GA2 Steel Angle

Length
3200mm

GFS1 Fixing Strap

Length
2400mm

or

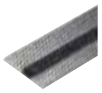

GFT1 Fixing 'T'

Length
2400mm

Board products

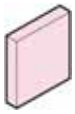

Gyproc FireLine[1]

Thickness	12.5, 15mm
Width	900, 1200mm

Gyproc DuraLine[1]

Thickness	15mm
Width	1200mm

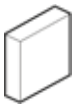

Glasroc F FIRECASE

Thickness	15, 20, 25, 30mm
Width	600, 1200mm

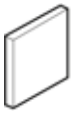

Glasroc F MULTIBOARD

Thickness	6, 10, 12.5mm
Width	1200mm

[1] Moisture resistant boards are specified in intermittent wet use areas, e.g. shower cubicles.

Fixing and finishing products

Gyproc Wafer Head Drywall Screws
For Gypframe metal-to-metal fixing less than 0.8mm thick ('I' studs less than 0.6mm thick).

Gyproc Drywall Screws
For fixing boards to Gypframe metal framing less than 0.8mm thick ('I' studs less than 0.6mm thick).

Glasroc F FIRECASE Screws
For board-to-board fixing of Glasroc F FIRECASE, and for board-to-metal fixing of Glasroc F FIRECASE and Glasroc F MULTIBOARD.

Gyproc jointing materials
For seamless jointing.

Thistle Board Finish or Thistle Multi-Finish
To provide a plaster skim finish.

or

Thistle Durafinish
To provide improved resistance to accidental damage.

Installation overview

Four-sided protection to steel columns

Gypframe GL10 GypLyner Steel Framing Clips are friction-fitted at maximum 800mm centres onto the column flanges. Gypframe GL1 Lining Channel is located over the clips to form the steel framework. Where lengths of Gypframe GL1 Lining Channel abut, GL10 clips are located either side to provide support. Alternatively use Gypframe GL3 Channel Connector to join the ends of Gypframe GL1 Lining Channels together. Boards are cut to width and fixed to all framing members using Gyproc Drywall Screws. Board joints on adjacent sides are staggered by a minimum 600mm. Short lengths of Gypframe GL1 Lining Channel, Gypframe GFS1 Fixing Strap, or Gypframe GFT1 Fixing 'T' are cut to form horizontal noggings to back board-end joints.

Three-sided protection to steel columns and beams

Gypframe GA2 Steel Angle is located to both sides of the wall / soffit flange and secured using appropriate fixings at 600mm centres. GL10 clips are friction-fitted at maximum 800mm centres to both edges of the bottom flange ensuring that adjacent clips are in alignment. Gypframe GL1 Lining Channel is located over the clips to form the steel framework. Where lengths of Gypframe GL1 Lining Channel abut, GL10 clips are located to either side to provide support. Alternatively use Gypframe GL3 Channel Connector to join the ends of Gypframe GL1 Lining Channels together.

Boards are cut to width and fixed to all framing members using Gyproc Drywall Screws. Board joints on adjacent sides are staggered by a minimum 600mm. Noggings are installed to support board joints. Gyproc FireLine or Glasroc F MULTIBOARD boards are then screw-fixed to the framing using Gyproc fixings.

Noggings of Gypframe GL1 Lining Channel are installed at 600mm centres between adjacent Gypframe GL1 Lining Channels to form supplementary framing.

Boxing out

If the encasement system is required to be enlarged, a 'boxing out' method using Gypframe studs and channels can be adopted. See Construction details – 7 - 8.

Additional fire protection (columns only)

Where 180 minutes fire protection is required, Glasroc F FIRECASE is specified as the cladding. Glasroc F FIRECASE is fixed through to the metal framing.

For full installation details, refer to the British Gypsum **SITE** BOOK, available to download from www.british-gypsum.com

For full installation details, refer to the British Gypsum **SITE BOOK**, available to download from www.british-gypsum.com

Design

Planning - key factors

GypLyner ENCASE steel encasement is suitable for protecting structural steel sections with a section factor A/V (Hp/A) up to 260m^{-1}, calculated on the basis of box protection to three or four sides as required. It will protect all universal column and beam sections described in *BS 4: Part 1*, and many joist and castellated beam sections.

Lining selection

The designer should follow the procedure below to determine the thickness of cladding required:

1. Ascertain whether protection is required on three or four sides of the section.
2. Find out what period of fire resistance is required.
3. Refer to the A/V (Hp/A) **Tables 2 - 4**. Locate the steel section to be protected, listed by its size and mass per metre, and read off the section factor A/V.
4. Refer to **Tables 5 - 8**. Locate the A/V value on the vertical scale on the appropriate table. Read across the chart to the column relating to the period of fire resistance required and read off the designated thickness of the relevant cladding required to form the encasement.
5. Select the type of board to be used.

For castellated sections and cellular beams please refer to the Association for Specialist Fire Protection publication, ASFP Yellow Book - 'Fire Protection for Structural Steel in buildings' for guidance, available to download from www.asfp.org.uk

For improved durability and impact resistance, the outer layer of Gyproc FireLine can be replaced with a layer of 15mm Gyproc DuraLine.

Size of encasement

The minimum dimension of encasement required for three or four-sided protection can be determined as shown in **Table 1** below. These dimensions can be increased if the encasement needs to be boxed-out to achieve a specific common dimension, or to build out beyond fixing bolts, etc. See **Construction details – 7 - 8**.

Table 1 – The minimum dimension of encasements required for three or four sided protection

Depth	Size
Three-sided	Overall steel section depth + 25mm + the thickness of lining board
Four-sided	Overall steel section depth + 50mm + twice the thickness of lining board
Width	**Size**
Three and four-sided	Overall steel section width + 20mm + the thickness of lining board

Partition fixing

Partitions and wall linings can be fixed through to the metal framework. See **Construction details – 5 - 6.**

Additional support

Where the steel section web or flange dimension exceeds 600mm, additional support will be required for the cladding. Noggings of Gypframe GL1 Lining Channel are installed at 600mm centres between adjacent Gypframe GL1 Lining Channels to form supplementary framing.

Water vapour resistance

Vapour control can be provided to encasements which form part of an external wall lining by using Gyproc FireLine DUPLEX as the lining. The water vapour resistance can be further improved by treating the lining surface with two coats of Gyproc Drywall Sealer. Where Glasroc F FIRECASE or Glasroc F MULTIBOARD forms the lining, vapour control can be achieved by using a suitable proprietary paint treatment.

Board finishing

▶ Refer to **section 13 – Finishing systems and decorative effects.**

▶ Please refer to **section 3 - Basic principles of system design** for general guidance

Table 2 – Section factor A/V (Hp/A) of Universal Beams

Serial size mm	Mass / metre kg	3 sides m^{-1}	4 sides m^{-1}
914 x 419	388	45	55
	343	50	60
914 x 305	289	60	65
	253	65	75
	224	75	85
	201	80	95
838 x 292	226	70	80
	194	80	90
	176	90	100
762 x 267	197	70	85
	173	80	95
	147	95	110
686 x 254	170	75	90
	152	85	95
	140	90	105
	125	100	115
610 x 305	238	50	60
	179	70	80
	149	80	95
610 x 229	140	80	95
	125	90	105
	113	100	115
	101	110	130
533 x 210	122	85	95
	109	95	110
	101	100	115
	92	110	125
	82	120	140
457 x 191	98	90	105
	89	100	115
	82	105	125
	74	115	135
	67	130	150
457 x 152	82	105	120
	74	115	130
	67	125	145
	60	140	160
	52	160	180
406 x 178	74	105	125
	67	115	140
	60	130	155
	54	145	170
406 x 140	46	160	185
	39	190	220
356 x 171	67	105	125
	57	125	145
	51	135	165
	45	155	185
356 x 127	39	170	195
	33	195	225
305 x 165	54	115	140
	46	130	160
	40	150	180
305 x 127	48	125	145
	42	140	160
	37	155	180
305 x 102	33	175	200
	28	200	225
	25	225	260
254 x 146	43	120	150
	37	140	170
	31	160	200
254 x 102	28	170	200
	25	190	220
	22	215	250
203 x 133	30	145	180
	25	165	210
203 x 102	23	175	210
178 x 102	19	190	230
152 x 89	16	190	235
127 x 76	13	195	240

Table 3 – Section factor A/V (Hp/A) of Universal Columns

Serial size mm	Mass / metre kg	3 sides m^{-1}	4 sides m^{-1}
356 x 406	634	15	20
	551	20	25
	467	20	30
	393	25	35
	340	30	35
	287	30	45
	235	40	50
356 x 368	202	45	60
	177	50	65
	153	55	75
	129	65	90
305 x 305	283	30	40
	240	35	45
	198	40	50
	158	50	65
	137	55	70
	118	60	85
	97	75	100
254 x 254	167	40	50
	132	50	65
	107	60	75
	89	70	90
	73	80	110
203 x 203	86	60	80
	71	70	95
	60	80	110
	52	95	125
	46	105	140
152 x 152	37	100	135
	30	120	160
	23	155	205

Table 4 – Section factor A/V (Hp/A) of Universal Joists

Serial size mm	Mass / metre kg	3 sides m^{-1}	4 sides m^{-1}
254 x 203	82	70	90
254 x 114	37	130	155
203 x 152	52	85	105
152 x 127	37	90	120
127 x 114	30	100	130
127 x 114	27	110	140
114 x 114	27	100	135
102 x 102	23	105	140
89 x 89	19	105	145
76 x 76	13	140	185

▶ Please refer to **section 3 - Basic principles of system design** for general guidance

Performance (▶ Refer to **section 3 - Basic principles of system design**)

Table 5 – The 550°C chart to *ENV 13381-4* for selecting Gyproc FireLine lining thickness

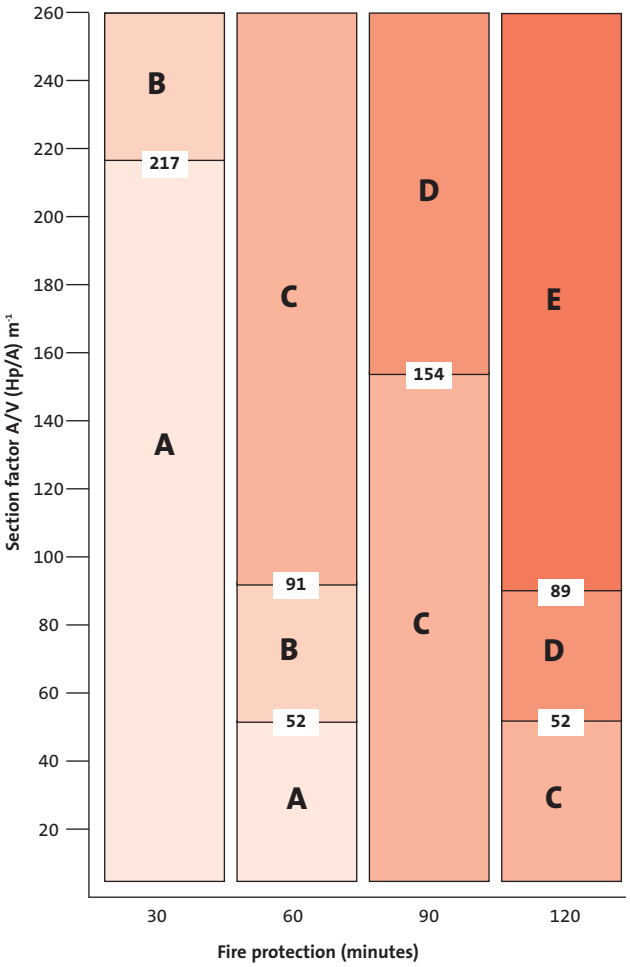

System reference DS150001

Key - Thickness of Gyproc FireLine required[1]

A	=	12.5mm
B	=	15mm
C	=	25mm (12.5mm + 12.5mm)
D	=	30mm (15mm + 15mm)
E	=	45mm (15mm + 15mm + 15mm)

Table 6 – The 550°C chart to *BS 476: Part 21* for selecting the required Gyproc FireLine lining thickness

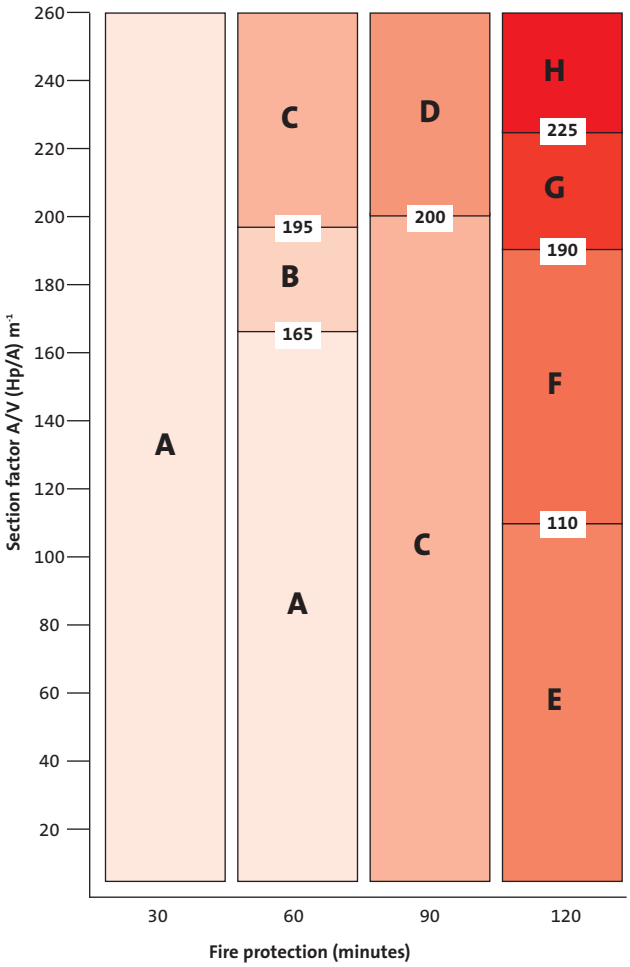

System reference DS150001

Key - Thickness of Gyproc FireLine required[1]

A	=	12.5mm
B	=	15mm
C	=	25mm (12.5mm + 12.5mm)
D	=	27.5mm (15mm + 12.5mm)
E	=	30mm (15mm + 15mm)
F	=	37.5 (12.5mm + 12.5mm + 12.5mm)
G	=	40mm (15mm + 12.5mm + 12.5mm)
H	=	42.5mm (15mm + 15mm + 12.5mm)

NB For improved durability and impact resistance, the outer layer of Gyproc FireLine can be replaced with a layer of 15mm Gyproc DuraLine.

[1] The fire protection is based on board joints being taped and filled, or skimmed according to British Gypsum's recommendations.

Table 7 – The 550°C chart to *BS 476: Part 28* for selecting Glasroc F MULTIBOARD lining thickness

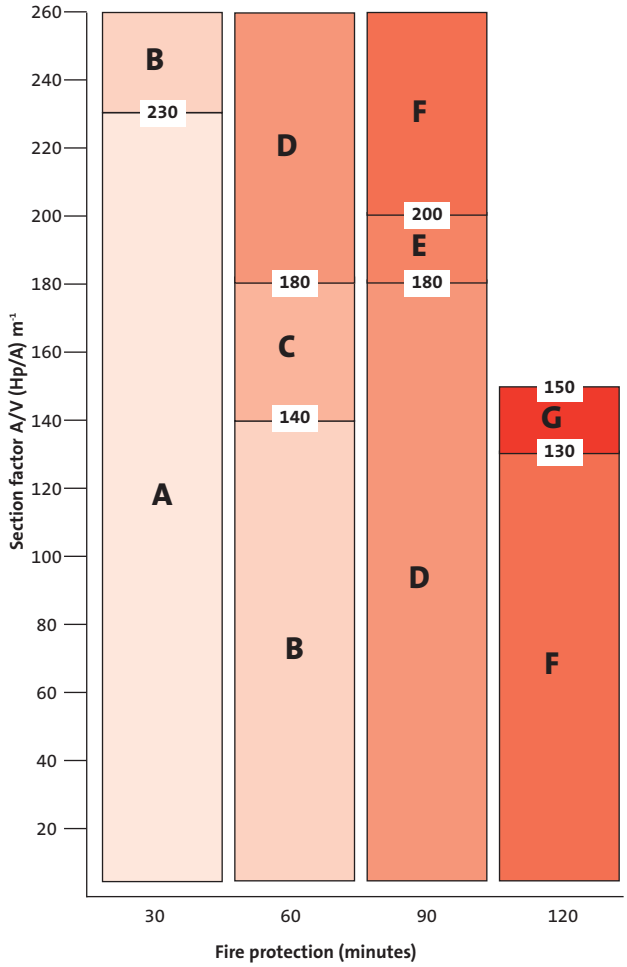

System reference DS150002

Key - Thickness of Glasroc F MULTIBOARD required[1]

A	=	6mm
B	=	10mm
C	=	12.5mm
D	=	20mm (10mm + 10mm)
E	=	25mm (12.5mm + 12.5mm)
F	=	30mm (10mm + 10mm + 10mm)
G	=	37.5mm (12.5mm + 12.5mm + 12.5mm)

Table 8 – The 550°C chart to *BS 476: Part 21* for selecting Glasroc F FIRECASE lining thickness

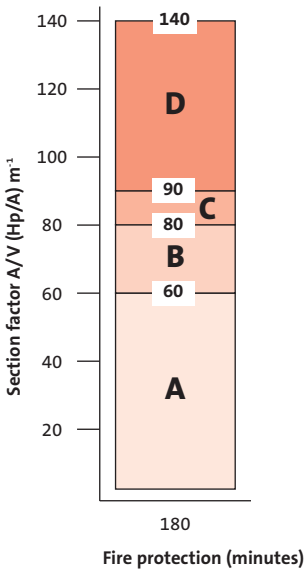

System reference D120003

Key - Thickness of Glasroc F FIRECASE required[1]

A	=	35mm (20mm + 15mm)
B	=	40mm (20mm + 20mm)
C	=	45mm (25mm + 20mm)
D	=	50mm (25mm + 25mm)

[1] The fire protection is based on board joints being taped and filled, or skimmed according to British Gypsum's recommendations.

Construction details

1 Four-sided column encasement - single layer

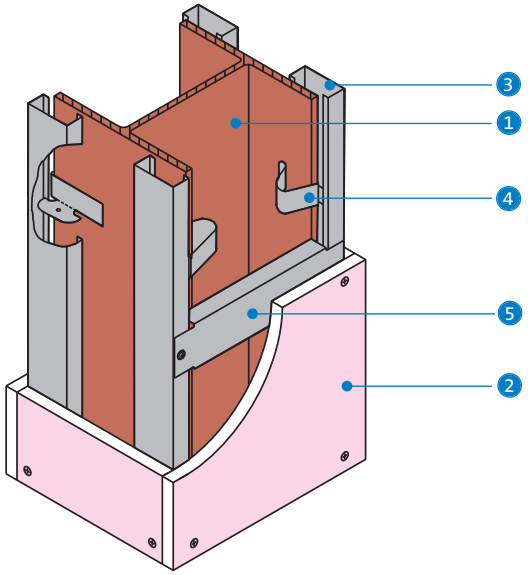

2 Four-sided column encasement - double layer

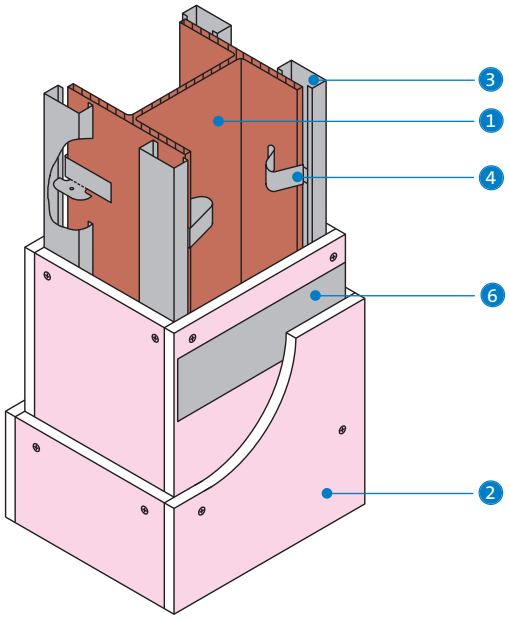

3 Three-sided beam encasement - single layer

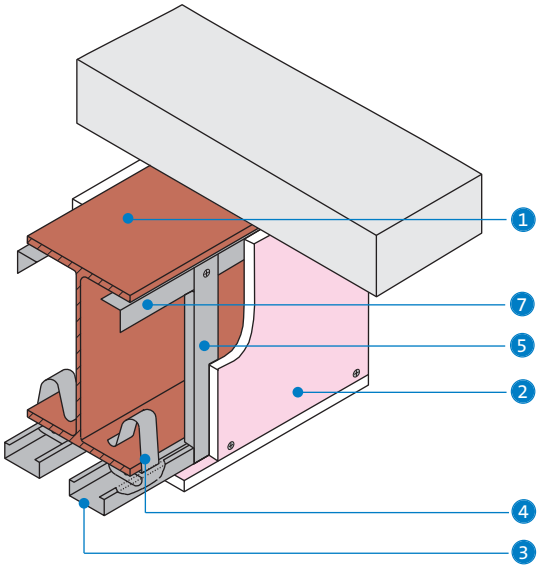

4 Three-sided beam encasement - double layer

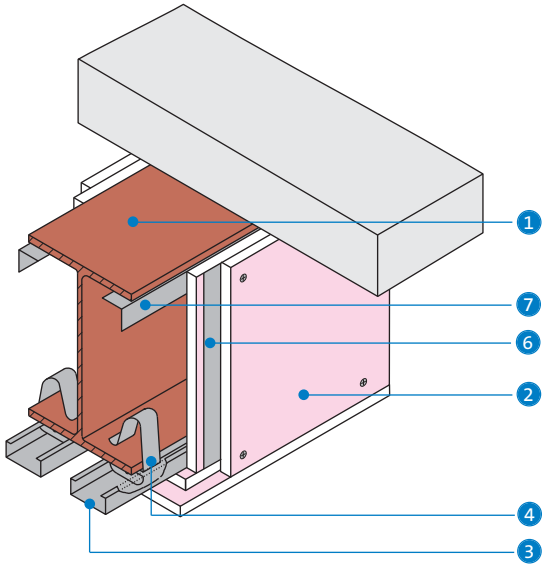

1. Structural steel
2. Gyproc FireLine
3. Gypframe GL1 Lining Channel
4. Gypframe GL10 GypLyner Steel Framing Clip
5. Gypframe GL1 Lining Channel nogging or Gypframe GFT1 Fixing 'T' board joints
6. Gypframe GFS1 Fixing Strap
7. Gypframe GA2 Steel Angle

5 Column encasement and partition junction

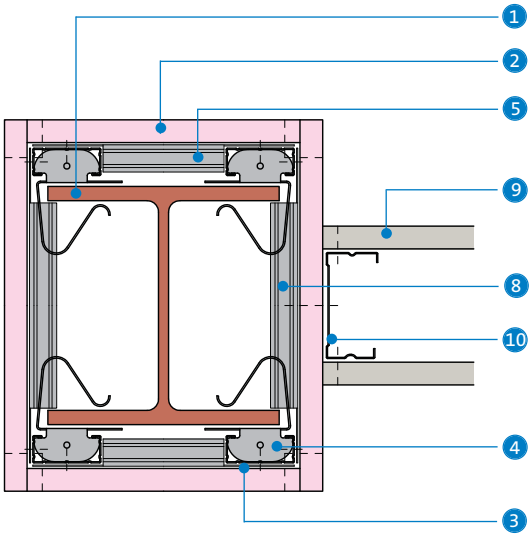

6 Beam encasement and partition junction

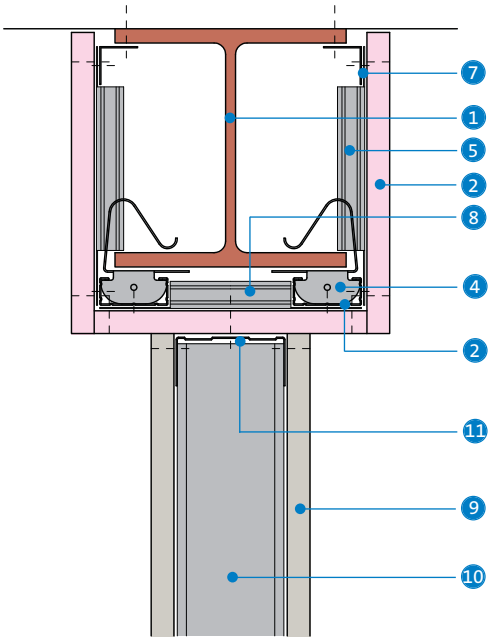

7 Boxing out for columns up to 600mm wide using **GypLyner IWL**

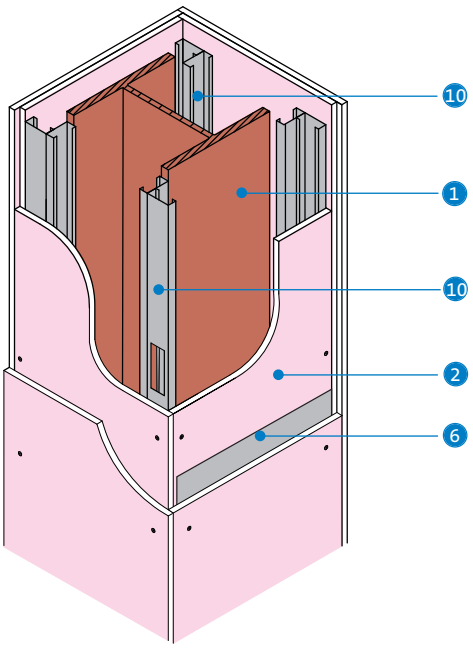

8 Boxing out for columns over 600mm wide using **GypLyner IWL**

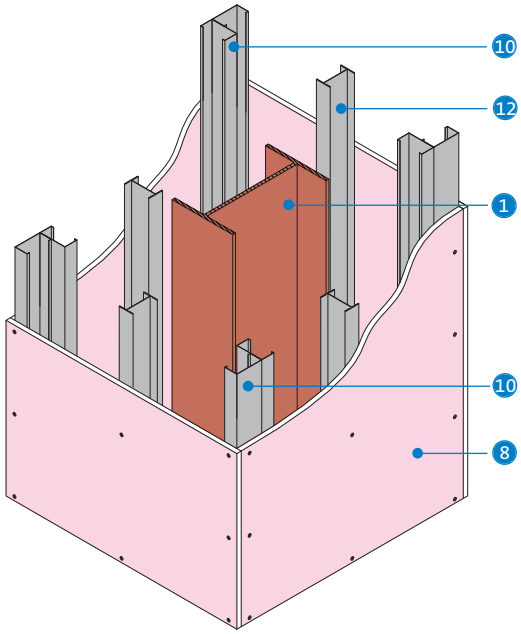

1. Structural steel
2. Gyproc FireLine
3. Gypframe GL1 Lining Channel
4. Gypframe GL10 GypLyner Steel Framing Clip
5. Gypframe GL1 Lining Channel nogging or Gypframe GFT1 Fixing 'T' board joints
6. Gypframe GFS1 Fixing Strap
7. Gypframe GA2 Steel Angle
8. Gypframe GL1 Lining Channel nogging at 600mm centres
9. Gyproc plasterboard
10. Gypframe 'C' Studs
11. Gypframe Standard Floor & Ceiling Channel
12. Gypframe 'I' Stud at 600mm centres

Cavity fire barriers

This section includes updated information, added since it was first published in July 2009. Please see the WHITE BOOK update document for details.
Last updated 05/07/2010

Berkeley Homes,
Royal Arsenal, Woolwich

Cavity fire barriers

30 – 60 mins

Building Regulations require that cavities and concealed spaces in the structure or fabric of a building are sub-divided or sealed by means of cavity barriers or fire-stopping to restrict the hidden spread of smoke and flames. This is of prime importance since many buildings are honeycombed with concealed cavities and voids within the roofs, floors, and walls.

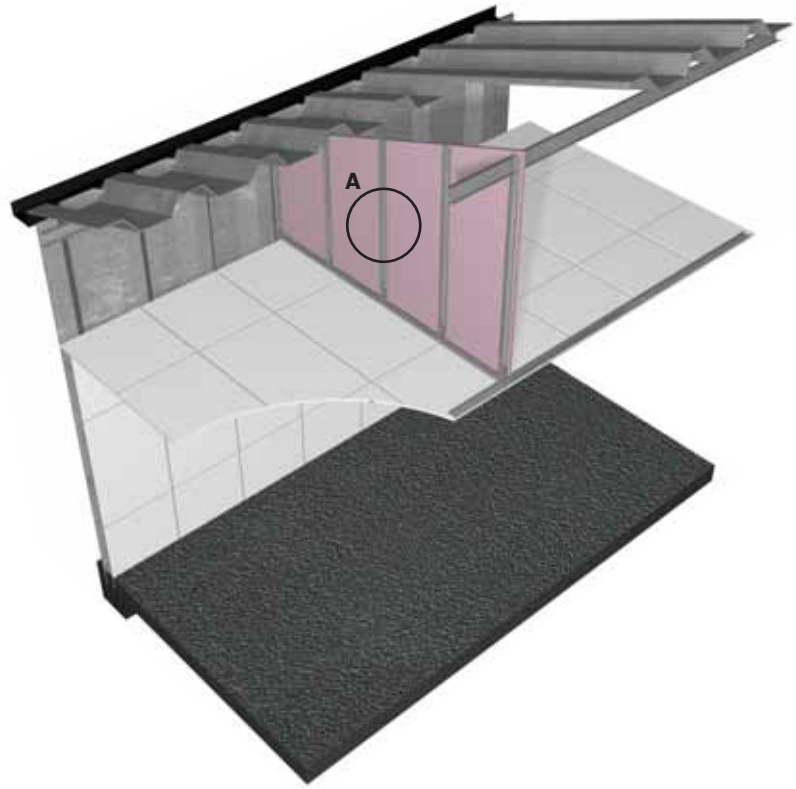

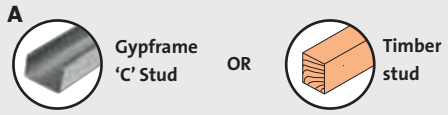

Key facts

- Required by Building Regulations Approved Document B
- Metal or timber frame to suit
- Provides up to 60 minutes fire integrity
- Built in-situ or pre-formed to match the application

Applications

Designed for the sub-division of cavities in a wide range of situations.

Sector

- ✓ Office / commercial
- ✓ Education
- ✓ Custodial
- ✓ High-rise multi-occupancy
- ✓ Retail
- ✓ Healthcare
- ✓ Housing
- ✓ Auditoria
- ✓ Sport and leisure
- ✓ Industrial
- ✓ Apartment buildings

System components

Framing products

Gypframe 48 S 50 'C' Stud — **Length** 2400, 2700, 3000mm 3600mm

Gypframe Standard Floor & Ceiling Channels 50 C 50
Channel available in 3600mm only.

Gypframe GA1 Steel Angle — **Length** 2900mm

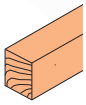

Timber framing (by others) — **Length** To suit

Board products

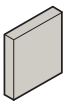

Gyproc WallBoard[1]
Thickness 15mm
Width 1200mm

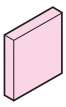

Gyproc FireLine[1]
Thickness 12.5mm
Width 1200mm

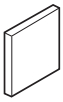

Glasroc F MULTIBOARD
Thickness 6, 10, 12.5mm
Width 1200mm

[1] Moisture resistant boards are specified in intermittent wet use areas, e.g. shower cubicles.

Fixing and finishing products

Gyproc Drywall Screws
For fixing boards to Gypframe metal framing less than 0.8mm thick ('I' studs less than 0.6mm thick).

Gyproc Drywall Timber Screws
For a positive direct fix of boards to timber joists.

Insulation products

Isover Cavity Barrier
Cavity closure in external walls.
Available in widths to suit.

Isover APR 1200
25mm, for improved acoustic performance.

Stone mineral wool (by others)
For fire-stopping.

Installation overview

The procedure for fixing timber or metal framing to the ceiling / structure, and for fixing Gyproc and specialist boards to form the cavity barrier, is in line with British Gypsum's normal drylining recommendations. Please refer to **GypWall CLASSIC** metal stud partitions, or timber stud partitions and separating / compartment walls in the current British Gypsum **SITE** BOOK, available to download from www.british-gypsum.com

Design

Planning - key factors
The maximum distance between barriers must be appropriate to the location of each cavity. Also, due consideration must be given to the class of surface exposed within the cavity.

It is also important that smoke and flames are restricted from passing from any cavity in a building element directly into a room or another cavity. Therefore, a cavity must be closed by a cavity barrier at every junction with another cavity. Any cavity contained within an element is also required to be closed by a cavity barrier around the perimeter of any opening through the element. The closure of cavities may already be provided by the construction itself, e.g. where a British Gypsum partition system prevents the continuation of cavities at a 'T' junction.

Smoke and flames must also be restricted from by-passing any building elements that are required to have fire resistance. Any cavity crossing the edges or ends of a fire resistant element should have a cavity barrier provided in the same plane as the element, see **Construction details – 3 - 5**. There are certain exceptions to this requirement, such as cavities in floors and roofs where the ceilings provide a minimum of 30 minutes fire resistance in addition to satisfying other stipulated requirements.

Cavity barriers must maintain their performance during the life of a building, taking account of any possible building movement due to subsidence, shrinkage, or thermal change. In addition, the possible failure of its fixings or adjacent construction in the event of a fire, and the collapse in a fire of any permitted services penetrating the cavity barrier, should be considered.

Fire-stopping
A cavity barrier must be tightly fitted to a rigid construction, or, if it abuts against slates, tiles, corrugated sheeting, or other construction to which it cannot be so fitted, then it must be suitably fire-stopped at the junction. See **Construction details – 1 - 2**, which show fire-stopping solutions using stone mineral wool.

Any services running through a fire cavity barrier should be fire-stopped using suitable materials, shown by test to maintain the fire resistance within that construction.

Isover cavity barriers

Designed to restrict the spread of smoke and flames, and also to minimise flanking noise transmission in concealed cavities in masonry, timber frame and steel frame constructions.

Isover cavity barriers are available in two standard widths:

- 100mm for standard fire-stopping and noise reduction applications.
- 300mm for party wall / external wall cavity junctions and where a higher performance is required.

A self-adhesive range of cavity barriers are available specifically for steel frame wall construction.

Fire performance
Due to the non-combustible nature of glass mineral wool, Isover cavity barriers will provide up to 100 minutes fire-resistance in a concealed cavity.

Acoustic performance
Isover cavity barriers aid compliance with flanking noise aspects within the following acoustic regulations:

- Building Regulations Approved Document E
- Robust Details (England & Wales)
- Section 5 (Scotland)

▶ Please refer to **section 3 - Basic principles of system design** for general guidance

Performance (▶ Refer to **section 3 - Basic principles of system design**)

EN Table 1 - Cavity fire barriers typical applications
Solutions to satisfy *BS EN 1364-1: 1999*

1

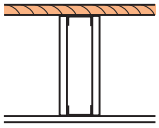

Gypframe 48 S 50 'C' Stud framework with studs at 600mm centres. Linings each side, as in table, fixed using Gyproc Drywall Screws at 300mm centres. Fire-stopping material, e.g. stone mineral wool to the perimeter as necessary.[1]

2

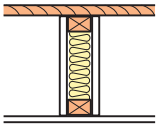

63mm x 38mm timber stud framework with studs at 600mm centres. Linings each side, as in table, fixed using Gyproc Drywall Timber Screws at 300mm centres. 25mm Isover APR 1200 in the cavity. Fire-stopping material, e.g. stone mineral wool to the perimeter as necessary.[1]

Detail	Board type	Lining thickness mm	Fire resistance Integrity minutes	Fire resistance Insulation minutes	System reference
1	WallBoard	15	30	30	A206002
2	WallBoard	15	30	30	A026010
1	Glasroc F MULTIBOARD	12.5	60	60	G106010

BS Table 2 - Cavity fire barriers typical applications
Solutions to satisfy *BS 476: Part 8 or 22: 1987*

1

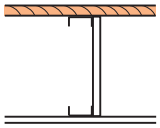

Gypframe 48 S 50 'C' Stud framework with studs at 600mm centres. Linings, as in table, fixed using Gyproc Drywall Screws at 300mm centres. Fire-stopping material, e.g. stone mineral wool to the perimeter as necessary.[1]

2

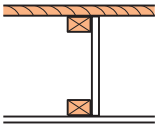

75mm x 50mm timber stud framework with studs at 600mm centres. Linings, as in table, fixed using Gyproc Drywall Timber Screws at 300mm centres. Fire-stopping material, e.g. stone mineral wool to the perimeter as necessary.[1]

3

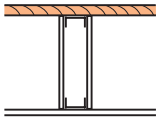

Gypframe 48 S 50 metal 'C' Stud framework with studs at 600mm centres. Linings each side, as in table, fixed using Gyproc Drywall Screws at 300mm centres. Fire-stopping material, e.g. stone mineral wool to the perimeter as necessary.[1]

4

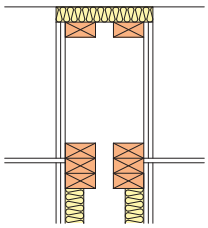

Robust Detail E-WT-1 roof junction detail (pitched roof with no room-in-the-roof). Linings as in table.

Detail	Board type	Lining thickness mm	Fire resistance Integrity minutes	Fire resistance Insulation minutes	System reference
1	Glasroc F MULTIBOARD	10	30	15	G110001
2	Glasroc F MULTIBOARD	10	30	15	G110002
2	FireLine	12.5	30	15	E106002
3	Glasroc F MULTIBOARD	6 (both sides)	30	15	G110003
4	WallBoard	2 x 12.5 (both sides)	60	60	RD[2]

[1] See **Construction details – 1 - 2**.
[2] RD = Approved Robust Detail specification E-WT-1. For more information, visit www.robustdetails.com

NB The fire resistance and sound insulation performances are for imperforate partitions, walls and ceilings incorporating boards with all joints taped and filled, or skimmed according to British Gypsum's recommendations. The quoted performances are achieved only if British Gypsum components are used throughout, and the Company's fixing recommendations are strictly observed. Any variation in the specifications should be checked with British Gypsum.

Construction details

1 Sub-division of ceiling void using timber framed cavity barrier

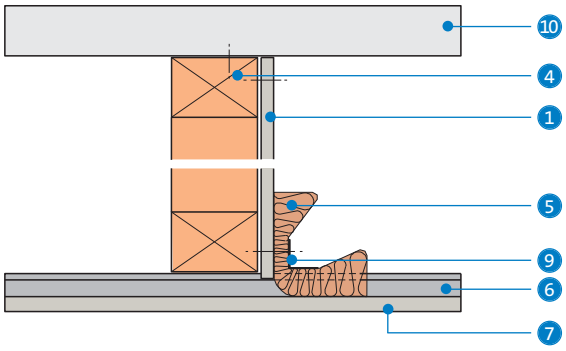

2 Sub-division of ceiling void using Gypframe metal framed cavity barrier

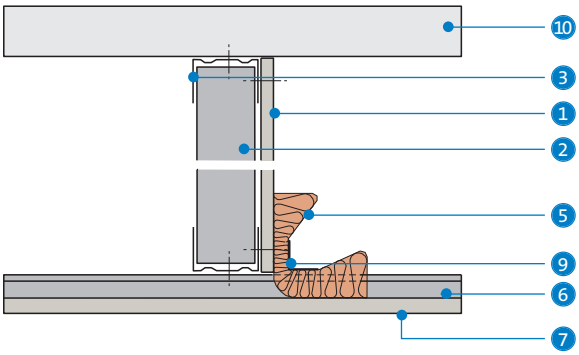

3 Sub-division or partition cavity

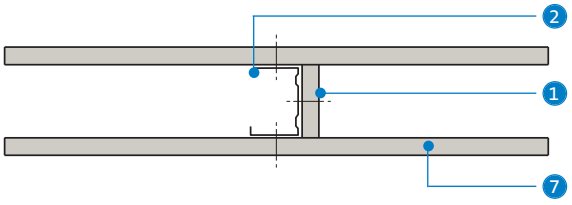

4 Cavity barrier at 'T' junction of partitions

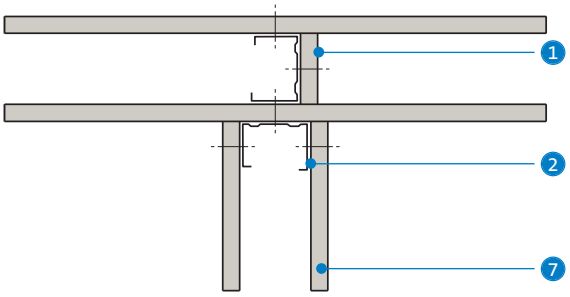

5 Timber frame Robust Detail E-WT-1 roof junction – pitched roof with no room-in-the-roof

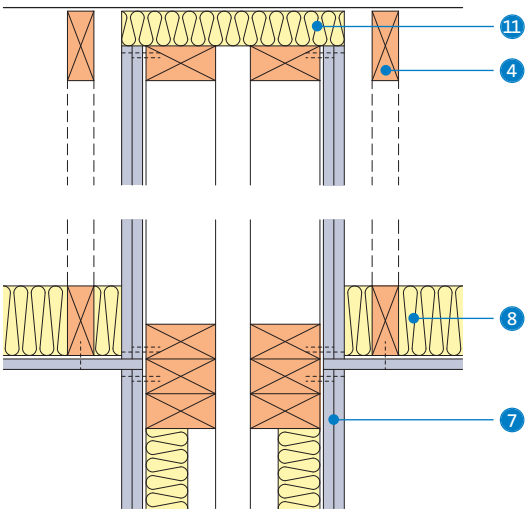

1. Gyproc or Glasroc F specialist board forming cavity fire barrier
2. Gypframe 'C' Stud
3. Gypframe Standard Floor & Ceiling Channel
4. Timber framing
5. Stone mineral wool fire-stopping
6. Proprietary grid ceiling
7. Gyproc plasterboard
8. Isover insulation
9. Gypframe GA1 Steel Angle
10. Concrete soffit
11. Isover Cavity Barrier

Plaster systems

This section includes updated information, added since it was first published in July 2009. Please see the WHITE BOOK update document for details.
Last updated 06/04/2011

Glenton Road,
Lewisham, London

Plaster systems

30 – 120 mins

Thistle building plaster systems include products for two / three coat hand application and one coat hand or machine application. The choice will depend on a number of factors including trade skills and finish quality requirements. Thistle plasters have been formulated to suit a wide variety of background types including concrete, brick, blockwork, sand / cement, expanded metal lath and plasterboard. The Thistle range also includes associated beads, reinforcing tapes and bonding agents. These have been manufactured, selected and tested to work reliably with Thistle plasters.

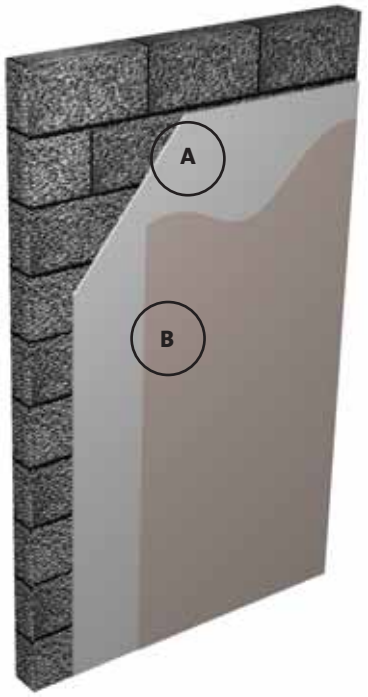

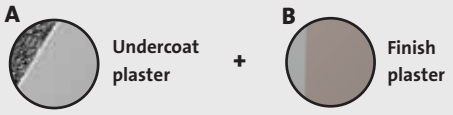

Key facts

- Two / three coat or one coat options
- Hand or machine application
- Resilient and scuff-resistant for general purposes, and excellent resistance to accidental damage provided by Thistle Durafinish
- Free from inherent shrinkage cracking
- Controlled setting times
- Grades to suit most internal solid backgrounds
- Proven products

Applications

Due to the design flexibility of British Gypsum plaster systems, they can be tailored to meet the requirements of a wide range of applications.

Sector

- ✓ Office / commercial
- ✓ Education
- ✓ Housing
- ✓ Retail
- ✓ Healthcare
- ✓ Apartment buildings
- ✓ Sport and leisure
- ✓ Industrial

System components

Thistle plaster products

Thistle undercoat plasters

Bonding Coat
For smooth or low suction backgrounds, e.g. concrete, plasterboard or surfaces treated with ThistleBond-it, and expanded metal lath.

Hardwall
High impact resistance and quicker drying surface. Suitable for application by hand or mechanical plastering machine to most masonry backgrounds.

Tough Coat
High coverage, good impact resistance. Suitable for application by hand or mechanical plastering machine to most masonry backgrounds.

Browning
For solid backgrounds of moderate suction with an adequate mechanical key.

Dri-Coat
Cement based, for replastering after installation of a damp-proof course.

X-Ray
Giving protection from x-rays in medical and dental x-ray installations.

Thistle finish coat plasters

Board Finish
For low-medium suction backgrounds, e.g. plasterboards, Thistle Dri-Coat.

Multi-Finish
For use over both undercoats and plasterboard.

Durafinish
To provide improved resistance to accidental damage.

Thistle one-coat plasters

Universal One Coat
For a variety of backgrounds. Suitable for application by hand or mechanical plastering machine.

Projection
For application by a mechanical plastering machine.

Plaster bonding agent / suction control products

ThistleBond-it
Bonding agent for pre-treatment of smooth backgrounds.

Thistle GypPrime
Suction control primer for high suction backgrounds.

Plaster beads and accessories

Thistle Plaster Angle Bead
A galvanised steel bead with expanded wings for reinforcing external angles.
Lengths: 2400mm and 3000mm

Thistle Plaster Stop Bead
A galvanised steel bead with an expanded wing for finishing and reinforcing plaster edges.
Depth: 10mm, 13mm
Lengths: 2400mm and 3000mm

Thistle ProTape FT50 and FT100
Self-adhesive glass fibre mesh tapes for joint reinforcement.

Gyproc Joint Tape
Paper tape with centre crease for joint reinforcement, providing superior resistance to cracking.

Always use genuine branded British Gypsum components to qualify for **SpecSure**® lifetime warranty

Installation overview

Reference should be made to *BS EN 13914 - 2: Design Considerations and Essential Principles for Internal Plastering*.

Mixing

Thistle plasters should be mixed by adding to clean water using clean mixing equipment. Contamination from previous mixes can adversely affect the setting time and strength. Fresh contamination has more effect than old, so equipment should be washed immediately after mixing.

Thistle plasters (except Thistle Projection) are suitable for mixing by hand or mechanical whisk of a slow speed, high torque type. While mechanical mixing speeds the process up, there is no need to continue mixing after dispersing lumps and achieving the right consistency. Over-mixing wastes time and energy, can affect setting times, lead to deterioration in workability and create difficulty in achieving a flat finish.

Plastering onto solid backgrounds

Undercoat plasters should be applied with firm pressure, built out to the required thickness, ruled to an even surface, and lightly scratched to form a key for Thistle Multi-Finish or Thistle Durafinish.

Plastering onto metal lath

Application to expanded metal lath involves a pricking-up coat, which should be forced through the metal lath to obtain a good key. The surface of the pricking-up coat must be wire-scratched to provide a good key for the floating coat, and allowed to set but not dry, before the floating coat of the same plaster is applied. Floating coats should be applied at a coat thickness not exceeding that recommended (see Design, Plaster thickness, later), up to a total plaster thickness of 25mm, and wire-scratched between each coat. The final floating coat should be ruled to an even surface and lightly scratched to form a key for Thistle Multi-Finish or Thistle Durafinish.

Undercoat plastering to plasterboard

Plaster should only be applied to the front face of plasterboards. Where a Thistle Bonding Coat / Thistle Multi-Finish or Thistle Durafinish system is applied to plasterboards, Gyproc Joint Tape should be used to reinforce joints and angles. Any gap between boards exceeding 3mm should be pre-filled with plaster, which is spread along each joint. Gyproc Joint Tape is then pressed firmly into the plaster, and immediately covered with a further application. The joints should be allowed to stiffen, but not dry, before undercoat plastering commences. Thistle Universal One Coat and Thistle Projection are also suitable for use on plasterboards where they combine the functions of both undercoat and finish plaster. For skimming:

▶ Refer to **section 13 – Finishing systems and decorative effects, Plaster skimming.**

Projection plastering

Thistle Projection, Thistle Universal One Coat, Thistle Hardwall and Thistle Tough Coat are all suitable for machine application. Plaster should be sprayed on to the background in the form of a ribbon. The consistency should allow the ribbons to run together. When a substantial area has been covered, the plaster is worked and ruled as in hand plastering. It is easier to attain the required thickness of plaster in one application by machine, but the total thickness should not normally exceed 25mm, subject to background suitability.

One coat hand plastering

Thistle Universal One Coat should be applied with firm pressure, built out to the required thickness and ruled to an even surface, filling in any slacks or hollows. As the plaster stiffens, further flattening and paring should be carried out. When sufficiently firm, the surface should be scoured with a sponge float and water as required, to raise fat to the surface. Allow the fat time to stiffen, then progressively trowel to a smooth matt finish.

Plastering following damp-proof course treatment

Thistle Dri-Coat is the only British Gypsum plaster recommended for this application. Initial curing and shrinkage of the scratched undercoat must be allowed to take place prior to application of finish plaster. In good drying conditions, a minimum delay of 24 hours is required. In cold / damp conditions or where background suction is low, a longer delay will be necessary. If sufficient delay is not allowed, cracking or shelling of the finish coat may result. If the floor is solid, a 50mm gap should be left between the plasterwork and the floor level. Under no circumstances should the damp-proof course be bridged.

Decoration

Thistle plasters can be decorated with most paint finishes and most wallcoverings. Follow manufacturers' recommendations. Impermeable finishes including tiles, should not be applied until the background and plaster are dry. A permeable paint can be used in the interim. Take care with Thistle Hardwall and Thistle Tough Coat, which dry from the surface, appearing surface dry before they are fully dry in their depth. *BS EN 13914 - 2: Design Considerations and Essential Principles for Internal Plastering* states that plastering should be done under similar or better lighting conditions than the final work will be judged in. This is particularly important for glossy finishes and / or low angle natural or artificial lighting.

Tiling

Tiles up to 20kg/m^2 can be applied directly to the Thistle finish coats, except where the system includes a bonding agent. As the total weight of tiles and plaster applied over a bonding agent is limited to 20kg/m^2, consideration should be given to tiling directly to the masonry background without plastering. If plastering to provide a background for tiles, avoid polishing the surface. Polished plaster surfaces should be roughened and a suitable primer used. Tiles should not be applied directly to Thistle undercoats, with the exception of Thistle Dri-Coat.

Performance (▶ Refer to **section 3 - Basic principles of system design**)

BS **Table 1 – New or replacement ceilings to solid timber joists**
Solutions to satisfy *BS 476: Part 21*

1

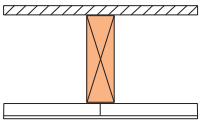

Timber joists with suitable timber noggings between joists to support board edges (unless otherwise stated). Ceiling specification as in table.

2

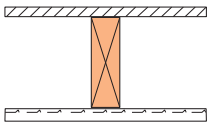

Timber joists with suitable timber noggings between joists to support metal lathing. Plaster to metal lathing as in table.

Detail	Ceiling specification	Flooring board type[2]	Joist centres mm	Joist width (minimum) mm	System reference
30 minutes fire resistance BS					
1	One layer of 9.5mm Gyproc WallBoard or Gyproc HandiBoard with 2mm Thistle Board Finish or Thistle Multi-Finish	a	450	47	C014012
1	One layer of 12.5mm Gyproc WallBoard or Gyproc HandiBoard with 2mm Thistle Board Finish or Thistle Multi-Finish	b	600	38	C016002
60 minutes fire resistance BS					
2	Ribbed metal lath[1] with 13mm Thistle Bonding Coat and 2mm Thistle Multi-Finish	b	600	44	C016016
2	Ribbed metal lath[1] with 19mm Thistle Universal One Coat	b	600	38	C016017
120 minutes fire resistance BS					
2	Ribbed metal lath[1] with 19mm Thistle Bonding Coat and 2mm Thistle Multi-Finish	b	600	48	C016045

[1] Where plaster is applied to ribbed metal lath, the plaster thickness is measured from the face of the lath, and the lath should be installed in accordance with the manufacturers' recommendations. With 120 minutes fire resistance construction, the metal lath is independently fixed with wire supports from the joist sides.
[2] Floor types: a Wood board t&g flooring, not less than 18mm (finished) thickness.
b Wood board t&g flooring, not less than 21mm (finished) thickness.

NB Thistle plaster is classified A1 (except Thistle Durafinish which is A2-s1, d0) in accordance with *BS EN 13501-1: 2002*. Refer to **section 3.1 – Fire performance, Table 2**.

Table 2 – Upgrading existing ceilings to solid timber joists
Solutions to satisfy *BS 476: Part 21*

1

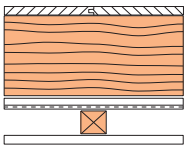

Existing lath and plaster ceiling supported by chicken wire securely fixed to the joists, battened with 38mm x 38mm timber (at 600mm centres with noggings or 450mm centres without noggings). Ceiling board type / applied plaster as in table.

2

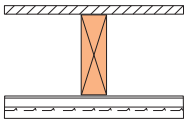

Existing ceiling underdrawn with metal lath[1] securely fixed to the joists. Ceiling plaster as in table.

3

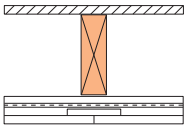

Existing lath and plaster ceiling (up to 20mm thick) supported by chicken wire securely nailed to the joists. Ceiling board type / applied plaster as in table.

4

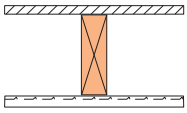

Existing ceiling removed and metal lath[1] securely fixed to the joists. Ceiling plaster as in table.

Detail	Board type / applied plaster	Joist centres	Joist width (minimum)	System reference
30 minutes fire resistance BS				
1	One layer of 12.5mm Gyproc HandiBoard or Gyproc WallBoard with 2mm Thistle Board Finish or Thistle Multi-Finish	600	38	C016020
60 minutes fire resistance BS				
1	Two layers of 12.5mm Gyproc FireLine with 2mm Thistle Board Finish or Thistle Multi-Finish	600	38	C016022
2	13mm Thistle Bonding Coat with 2mm Thistle Multi-Finish	600	37	C016024
1	Two layers of 10mm Glasroc F MULTIBOARD with 2mm Thistle Board Finish or Thistle Multi-Finish	600	37	G106045
3	100mm x 10mm Glasroc F MULTIBOARD strips, one layer of 12.5mm Glasroc F MULTIBOARD with 2mm Thistle Board Finish or Thistle Multi-Finish	600	50	G106029
120 minutes fire resistance BS				
4	19mm Thistle Bonding Coat with 2mm Thistle Multi-Finish	600	48	C016045

[1] Where plaster is applied to ribbed metal lath, the plaster thickness is measured from the face of the lath, and the lath should be installed in accordance with the manufacturers' recommendations. With 120 minutes fire resistance construction, the metal lath is independently fixed with wire supports from the joist sides.

NB Floor type is a wood based t&g flooring, not less than 21mm (finished) thickness, or 20mm plain edge boarding with 3mm hardboard or plywood.

NB Thistle plaster is classified A1 (except Thistle Durafinish which is A2-s1, d0) in accordance with *BS EN 13501-1: 2002*. Refer to **section 3.1 – Fire performance, Table 2**.

Plaster selection

Undercoat solid plaster

What is the background surface?

suction: High ← → Low

		Aircrete blocks	Common bricks	Medium-density blocks	Dense blocks	Engineering bricks with raked joints	Plasterboard & Glasroc F MULTIBOARD	Cast in situ & pre-cast concrete	Painted / tiled surfaces	Metal lathing	Thickness applied -Walls	Thickness applied -Ceilings	Coverage per bag (at 11mm)	Water requirement (litres per bag)	Dry set weight (at 11mm)
Specialist plasters															
	Thistle Dri-Coat Cement based plaster for replastering after a damp-proof course.														
	Thistle X-Ray For use in medical and dental installations.														
Two coat	**Thistle Hardwall** High impact resistance for most masonry backgrounds. Can be spray applied.				NOT ON SMOOTH LOW-SUCTION BLOCKS					WHEN BRIDGING COLUMNS AND LINTELS	11mm	8mm	3.0m²	15	9.3kg/m²
	Thistle Tough Coat High coverage for most masonry backgrounds. Can be spray applied.				NOT ON SMOOTH LOW-SUCTION BLOCKS					WHEN BRIDGING COLUMNS AND LINTELS	11mm	8mm	3.5m²	17.5	8.5kg/m²
	Thistle Browning For solid backgrounds with adequate key.	USE G IN EXTREME CASES									11mm	8mm	3.5m²	17.5	8.4kg/m²
	Thistle Bonding Coat For smooth and low suction backgrounds.				USE B ON SMOOTH LOW-SUCTION BLOCKS		USE B ON MR BOARDS	USE B	USE B		11mm	8mm	2.75m²	14	12.1kg/m²
One coat	**Thistle Universal One Coat** For hand or spray application to most backgrounds.				USE B ON SMOOTH LOW-SUCTION BLOCKS		USE B ON MR BOARDS	USE B	USE B		13mm	10mm	2.25m² at 13mm	15	15kg/m² at 13mm
	Thistle Projection For application by a mechanical plastering machine.				USE B ON SMOOTH LOW-SUCTION BLOCKS		USE B ON MR BOARDS	USE B	USE B	USE SPRAY LATH	13mm	10mm	2.0m² at 13mm	Depends on machine settings	

Setting times: Thistle undercoat plasters - 1.5 to 2 hours. Thistle finish plasters - 1.5 hours or longer in cold weather.

▶ Please refer to **section 3 - Basic principles of system design** for general guidance

Skim finish plaster

What is the background surface?

suction: High ← → Low

		Dry undercoats	Damp undercoats	Plasterboard	Flat, smooth concrete	Waterproofed cement-based undercoats	Thickness applied	Coverage per bag (at 2mm)	Water requirement (litres per bag)	Dry set weight (at 2mm thickness)
Skim coat	**Multi-Finish** A versatile plaster for skim finishing undercoats and plasterboards.	DAMPEN BACKGROUND FIRST		USE B ON MR BOARDS	USE B		2mm	10m²	11.5	3.4kg/m²
	Board Finish For low to medium suction backgrounds especially plasterboard.			USE B ON MR BOARDS	USE B		2mm	10m²	11.5	3.4kg/m²
	Durafinish A versatile plaster that is 60% tougher than standard skim plasters.						2mm	10m²	11.5	3.4kg/m²

Minimum temperature to be maintained until dry. +2°C for Thistle Board Finish and Thistle Multi-Finish
+5°C for Thistle Durafinish

Suction control

Thistle GypPrime
Suction control primer used to reduce suction on very dry backgrounds. Use diluted (up to five parts water to one part Thistle GypPrime) or undiluted if severe suction control is required. Plaster is applied after Thistle GypPrime has soaked into the background.

G Use Thistle GypPrime where you see this symbol.

Bonding agent

ThistleBond-it
Bonding agent for smooth low-suction backgrounds. Apply undiluted, in one coat. Plaster when dry.

B Use ThistleBond-it where you see this symbol.

▶ Please refer to **section 3 - Basic principles of system design** for general guidance

Design

Plaster thickness
In general, normal thicknesses using undercoat / finish plaster systems are 11mm to walls or up to 8mm to ceilings, plus 2mm of finish plaster. One coat products are applied to the same total thickness, i.e. 13mm to walls or up to 10mm to ceilings.

When using Thistle Durafinish, the specified thickness of 2mm must be applied for the full performance to be achieved.

When using ThistleBond-it or plastering ceilings, do not exceed the thicknesses given. In cases involving both the use of a bonding agent and a sloping or horizontal background, e.g. the underside of concrete stair or floor units, it is strongly advised to reduce thickness further to minimise stress placed on the bonding agent. Greater thickness requires the use of a support for the plaster, e.g. metal lathing.

For plaster systems used on walls that do not use a bonding agent, thickness in excess of the recommendations up to a maximum of 25mm may be built up in a series of fully keyed coats of nominally 8mm using the same undercoat product throughout. Total thickness over 25mm normally requires the use of expanded metal lathing for Thistle Bonding Coat. If necessary this can be spaced away from the background, e.g. by fixing to timber battens.

Backgrounds - general
All surfaces should be reasonably dry and protected from the weather. The suitability of a particular background for plastering should be considered in relation to its strength, suction, bonding properties, shrinkage or thermal movement characteristics, water and soluble salt content. Very high or low suction substrates should be pre-treated. The use of ThistleBond-it is recommended for smooth and / or low suction backgrounds, whilst Thistle GypPrime is recommended for very dry, high suction backgrounds. The high suction of certain backgrounds can be suitably adjusted by sprinkling with water.

Brickwork / blockwork
The surface must be clean, dry and suitable to receive gypsum plaster. Control suction with water. If suction is severe the background should be pre-treated with Thistle GypPrime.

On high suction brickwork / blockwork the use of Thistle Hardwall or Thistle Tough Coat is recommended.

Aerated concrete blocks can give rise to high suction. Control suction with water or, if severe, pre-treat with Thistle GypPrime.

Low suction backgrounds such as some concrete blocks or engineering bricks provide minimal absorption. The joints should be raked thoroughly to give an adequate mechanical key. Smooth backgrounds should be pre-treated with ThistleBond-it.

Dense aggregate concrete blocks do not require wetting prior to plastering, but the plaster should be applied with very firm pressure to ensure intimate contact with the background.

Concrete
The surface must be clean, dry and suitable to receive gypsum plaster. Any mould oil or other release agents present must be thoroughly removed from the surface.

Normal ballast concrete should be given sufficient time to mature before applying plaster. The plaster should not be applied onto a green background or when any free water is visible. Mature concrete will require wetting to displace the air before plastering. Clean water should be applied 5 - 10 minutes before plaster application.

In-situ or pre-cast concrete that is exceptionally smooth or which is made from limestone, brick, granite and certain lightweight aggregates, will require pre-treatment with ThistleBond-it. No-fines concrete does not require wetting prior to plastering.

Pre-cast concrete units should be plastered with Thistle Bonding Coat. To reduce the risk of cracking, the floating coat should be applied with sufficient pressure to fill all gaps between the units.

With composite ceilings, the concrete beams should be pre-treated with ThistleBond-it. If required, the suction of the infill panels can also be controlled.

Combination backgrounds
The right product for each part of the background should be used, with joints formed using back-to-back Thistle stop beads, but this can be impractical, e.g. narrow concrete columns or lintels within block walls. These should be bridged using metal lathing and the plaster isolated from the concrete using building paper.
See also *Annex B3* of *BS EN 13914-2*.

Pre-treatment of very high or low suction backgrounds
Backgrounds such as ceramic tiles, glazed bricks, exceptionally smooth concrete or concrete made from limestone, brick, granite and certain lightweight aggregates, will require preparation and pre-treatment with ThistleBond-it bonding agent prior to plastering. The surface should be thoroughly cleaned and allowed to dry before pre-treatment.

Thistle GypPrime bonding agent should be used to pre-treat surfaces where suction is extremely high. With some very porous surfaces, wetting alone may be insufficient as the water is almost immediately absorbed.

If there is any doubt about the suitability of a background for direct plastering, a trial panel should be plastered and tested for adhesion once dry. If adhesion is inadequate, the appropriate bonding agent must be applied to the background prior to plastering.

▶ Please refer to **section 3 - Basic principles of system design** for general guidance

ThistleBond-it bonding agent is specially formulated for use on smooth backgrounds. It has many advantages over PVA and is the only bonding agent recommended for use with Thistle gypsum plasters. Benefits include:

- Contains fine aggregates for better mechanical adhesion.
- Applied in one coat only.
- Plaster is applied when ThistleBond-it is dry, allowing flexible timing of application.
- Plaster can be applied at normal thickness, i.e. up to 13mm; maximum 8mm on soffits.
- No dilution, so no confusion on site.
- Green coloured for ease of identification in application.

Thistle GypPrime bonding agent is specially formulated for the pre-treatment of very high suction backgrounds. It is the only suction control primer recommended for this use with Thistle plasters. It can be diluted as required, giving total flexibility, for different levels of suction control, and is yellow coloured for ease of identification.

ThistleBond-it and Thistle GypPrime should be applied strictly according to the user instructions. Care should be taken **not to exceed** the recommended plaster thickness otherwise bond failure may result. Where a greater thickness of plasterwork is required, due to an uneven background for example, expanded metal lathing and Thistle Bonding Coat should be specified.

Sand / cement undercoats

Cement based undercoats shrink on drying, usually with some cracking, which can appear several days or even weeks after application. If a Thistle finish plaster is applied before the shrinkage is complete there is an increased risk of delamination or cracking of the finish, particularly if the undercoat was not thoroughly keyed. The key provided to cement-based undercoats needs to be much deeper and the drying time allowance much longer than for gypsum-based undercoats. Retarded ready-mixed sand / cement mortars may have delayed shrinkage, and may contain additives that interfere with the setting or strength of Thistle finish plasters.

Expanded metal lath / beads

Plaster should only be applied to galvanised steel or epoxy coated stainless steel. Before plastering, all cut edges, damaged metal lath, staples, nail heads and ends of tying wire should be bent inwards and adequately protected by galvanising, painting or by applying a thick coat of lacquer.

Normal application to expanded metal lath employs a pricking-up coat, which should be forced through the metal lath to provide a good key to the background. The surface of the pricking-up coat must be wire-scratched to provide a good key for a floating coat of the same undercoat plaster. The pricking-up coat must be allowed to set but not to dry before the floating coat is applied.

Floating coats should be applied at a thickness of 8mm, up to a total plaster thickness of 25mm, and wire-scratched between each coat. The final floating coat should be ruled to an even surface and lightly scratched to form a key for Thistle Multi-Finish or Thistle Durafinish.

Machine applied plaster requires the use of spray lath.

Replastering walls following damp-proof course treatment

Thistle Dri-Coat is the only Thistle plaster recommended for this application. The source of the rising dampness must be identified and eliminated. The existing plasterwork should be hacked off to a height at least 0.5m above either the new damp-proof course or the last detectable sign of dampness. Where the old plaster is gypsum based, it must be completely removed. Following chemical damp-proof injection, old mortar joints, which are the site of higher salt concentrations, should be thoroughly raked out and the face of the brickwork brushed with a wire brush. Ideally, replastering with Thistle Dri-Coat should be delayed as long as possible to allow the background to dry out. Before replastering, any salts brought to the surface of the background during drying should be carefully removed.

Heavy salt contamination in the background can cause persistent damp problems. Buildings not originally built with a damp-proof course, such as older farmhouses, stables and barns, or buildings that have been exposed to storage of chemicals, are particularly at risk from this problem. Thistle Dri-Coat should not be used in these situations unless an appropriate survey shows that the risk from salts is minimal. The use of an independent wall lining may be a better solution. Chimney breasts are another area where salt deposits may be heavy.

Application of Thistle Dri-Coat can proceed once the background is clean, sound, free from dust and efflorescence, and where only residual moisture is present. Low suction or smooth backgrounds, such as engineering bricks, should be treated prior to plastering with a water-resisting bonding aid (by others), which should be plastered in accordance with the manufacturer's recommendations. Where the background is dry, it is important to control suction with the application of water. This prevents rapid drying of the plaster, which would impair its strength. Angle beads must not be fixed with gypsum-based materials. See **Installation overview – Plastering following damp-proof course treatment**.

Thistle Dri-Coat should not be used below ground level as hydrostatic pressure can give rise to direct water penetration. A suitable tanking treatment must be specified in this situation.

Replastering walls – general application

Where the wall to be replastered is damp, replastering should be delayed for sufficient time to allow the background to dry out. Any source of penetrating dampness must be identified and eliminated. Before replastering, any salts brought to the surface of the background during drying should be carefully removed. The background must be clean, sound, and free from dust.

▶ Please refer to **section 3 - Basic principles of system design** for general guidance

Loadbearing framed systems

Metsec SFS
Site fixed light gauge steel infill systems

Opal Court, Birmingham

This section includes updated information, added since it was first published in July 2009. Please see the WHITE BOOK update document for details.
Last updated 21/01/2011

Metsec MetFRAME
Loadbearing structural steel frame systems

Chessington
World of Adventure

Timber systems

George Wimpey,
Pembroke Grange, Caversham

Loadbearing - steel framing systems

Lightweight cold-rolled galvanised walling systems

Metsec Site Fixed System (SFS) and **MetFRAME** are high precision, light gauge steel framing systems that are suitable for virtually all types of structure. When used in conjunction with British Gypsum internal linings and Isover insulation, they provide fast-track solutions in keeping with the demands of modern methods of construction. Metsec provides a full pre-contract service, including structural calculations, which is underwritten by Professional Indemnity Insurance cover, and is backed up with full technical support throughout the project.

Key facts

- Fully engineered and tested solutions
- Versatility to aid freedom of design
- High precision components and ease of build
- A complete pre-contract service, including structural calculations, which is underwritten by Professional Indemnity Insurance cover
- Guaranteed performance and project support
- Proven loadbearing systems in conjunction with high performance British Gypsum internal linings

About Metsec

Synonymous with fast-track steel frame buildings, Metsec pioneered this construction technique in the UK and their track record extends to over 1,000 installations.

Metsec operates strict design and quality control procedures and is registered to *BS EN ISO 9001*, covering both the design and manufacture of its steel framing systems.

METSEC
voestalpine

Metsec Framing Division Support Team
Tel: 0121 601 6000 Fax: 0121 601 6126
E-mail: framing@metsec.com
Website: www.metsec.com

FAST TRACK STEEL BUILDING SYSTEMS
WITH BRITISH GYPSUM INTERNAL LININGS

Loadbearing - Metsec SFS

Site fixed light gauge steel infill systems

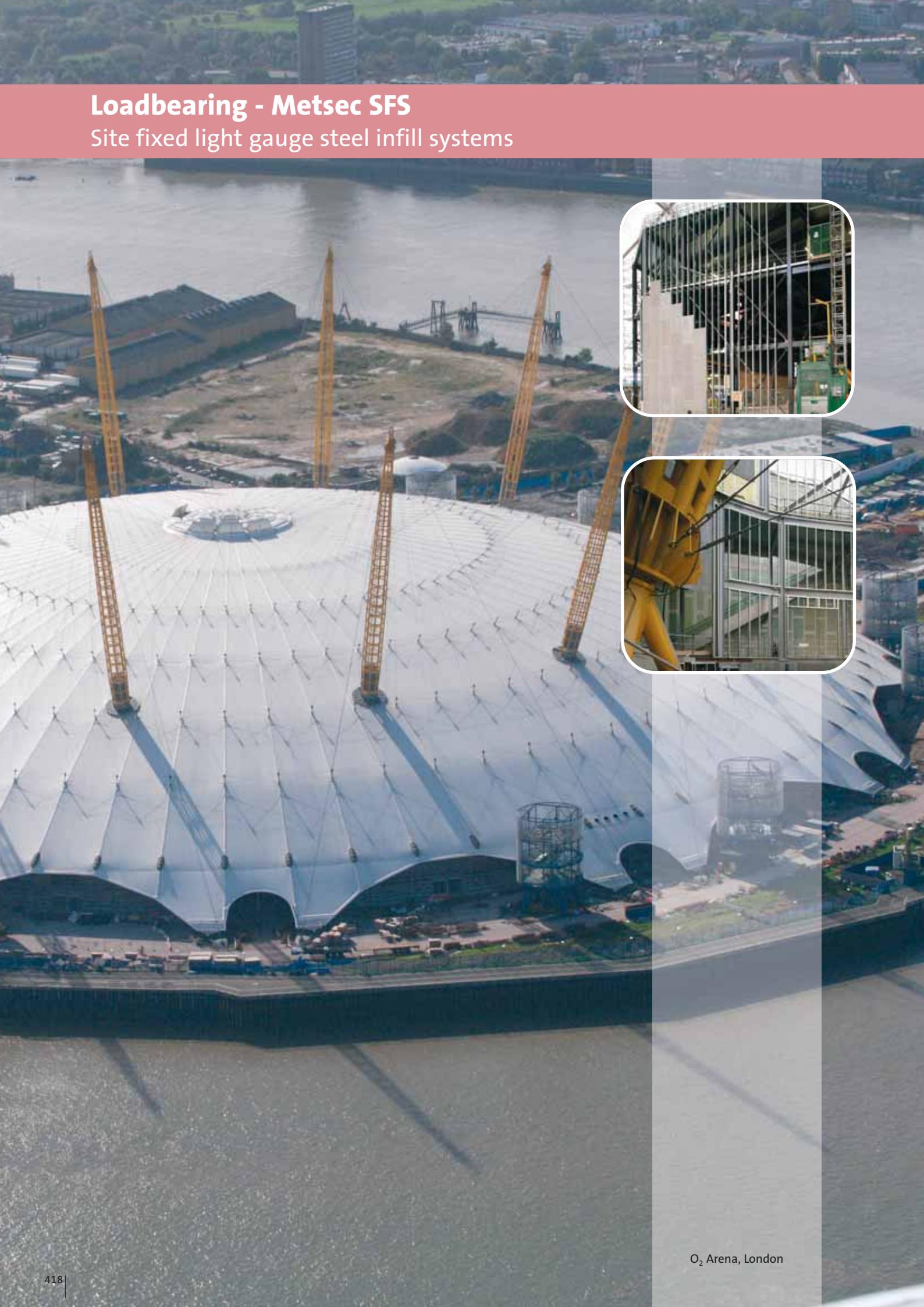

O_2 Arena, London

Loadbearing - Metsec SFS

48 – 62 R_w dB | 0.30 – 0.25 W/m²K | 60 mins

Metsec's SFS is a fast-track, pre-galvanised steel framing system, which is fixed as infill between the main structural frame members and provides a carrier for insulation, exterior cladding and interior Gyproc plasterboards. SFS frames are designed and manufactured to suit the dimensions, loading and deflection criteria for each floor height panel.

Head and base tracks, vertical studs and window trimming sections are all manufactured from lightweight, cold-rolled galvanised steel sections, cut to length and barcoded ready to be screwed together on site. It is ideal for projects where the speed of construction and / or a lightweight frame is required.

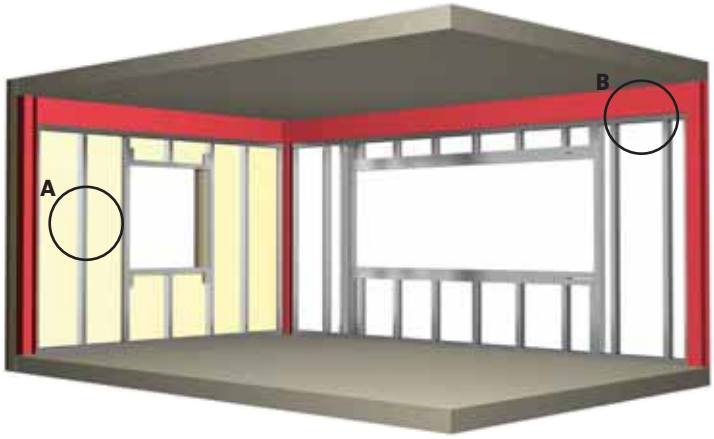

A Metsec Stud Section

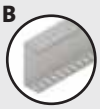

B Metsec Slotted Head Track

Key facts

- Pre-engineered off-site for quick installation
- Early weather protection to the structure
- Lightweight, dry construction
- Wind posts not required
- Provides lateral support for external cladding
- Easy to insulate thermally and acoustically
- Unique slotted head track for ease and speed of installation

Applications

A wide range of applications.

Sector

- ✓ Office / commercial
- ✓ Education
- ✓ Custodial
- ✓ High-rise multi-occupancy
- ✓ Retail
- ✓ Healthcare
- ✓ Housing
- ✓ Auditoria
- ✓ Sport and leisure
- ✓ Industrial
- ✓ Apartment buildings

System components

Metsec framing components

Stud Section
70M15, 100M12, 100M15, 100M20, 150M12, 150M20, 200M12, 200M15, 200M20, 250M16, 250M20, 300M20, 300M29.

Available in lengths up to 16m.

Strap	Depth
38VB09	38mm
100VB12	100mm

Slotted Head Track
74M12, 74M20, 104M12, 104M15, 104M20, 154M12, 154M20, 204M12, 204M20, 254M12, 254M20, 304M16, 304M20, 306M29.

Available in 3m and 4m lengths.

Track Section
74M12, 74M20, 104M12, 104M15, 104M20, 154M12, 154M20, 204M12, 204M20, 254M12, 254M20, 304M16, 304M20, 306M29.

Available in lengths up to 6m.

Tek Screw
5.5mm x 19mm low profile head Tek Screw.

Tek Screw
5.5mm x 38mm low profile head Tek Screw.

Gypframe framing components

RB1 Resilient Bar	Length
	3000mm

Board products

Gyproc WallBoard[1]

Thickness	12.5, 15mm
Width	1200mm

Gyproc SoundBloc[1]

Thickness	12.5, 15mm
Width	1200mm

Gyproc DuraLine[1]

Thickness	15mm
Width	1200mm

Gyproc Plank

Thickness	19mm
Width	600mm

Gyproc FireLine[1]

Thickness	12.5, 15mm
Width	1200mm

[1] Moisture resistant boards are specified in intermittent wet use areas, e.g. shower cubicles.

Fixing and finishing products

Gyproc Jack-Point Screws
25mm, 35mm, 41mm and 60mm for fixing boards to stud framing.

Gyproc Sealant
Sealing air paths for optimum sound insulation.

Gyproc jointing materials
For seamless jointing.

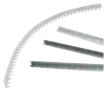

Gyproc edge and angle beads
Protecting and enhancing board edges and corners.

Thistle Board Finish or Thistle Multi-Finish
To provide a plaster skim finish.

or

Thistle Durafinish
To provide improved resistance to accidental damage.

Insulation products

Isover APR 1200
25mm, to achieve thermal and acoustic performance.

Isover Modular Roll
100mm, to achieve thermal and acoustic performance.

Isover Acoustic Slab
50mm, for improved thermal and acoustic performance.

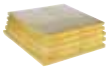

Isover Steel Frame Batt (SF1)
50mm, for thermal and acoustic insulation.

Isover Steel Frame Infill Batt (SF2)
50mm and 100mm, for thermal and acoustic insulation.

Isover Cavity Barrier – Self Adhesive Grade
Cavity closure in external walls.
Available in widths to suit.

Rigid Foam Insulation (by others)
Foil faced rigid PIR insulation board.

Insulated external render system (by others)
For building envelope and thermal performance.

Always use genuine branded British Gypsum components to qualify for **SpecSure®** lifetime warranty

Installation overview

Metsec Site Fixed Infill System (SFS)
It is the installer's responsibility to produce a cutting list and order Metsec materials.

- Section sizes should be taken from the project specific design / drawings.
- A site survey should be conducted to establish the 'as built' dimensions of the main frame to enable material to be ordered in the most economic manner.
- The orders should be co-ordinated to suit the desired construction programme.

Sections are delivered to site in bundles on an articulated lorry. Give consideration to the method of offloading material and the need for an accessible designated safe storage area.

Health and Safety issues must be agreed with the main contractor, prior to works commencing.

Installation
Base and head tracks should be set out as the project specific drawings and fixed in place. If the set out of the main frame results in the Metsec overhanging, refer to Metsec for guidance.

In all infill applications, a deflection head detail should be used at the top of the stud. Metsec recommends the use of the slotted head track wherever possible.

Studs shall be plumbed, aligned and securely attached / located within the base and head tracks.

Openings should be formed to suit the project specific design and architectural set-out, including any tolerances required.

Refer to bracing / blocking requirements shown on the project specific design.

Where components need to be cut on site, this should only be done with a chopsaw with a TCT blade and not an abrasive disk. Care should be taken to cut the components square where they are used in right-angled connections, or as required for an angular fit against abutting members.

Splices in sections are not permitted without consent from Metsec.

Fixing of components shall be with self-tapping screws, as specified by Metsec for the project. All screw fixings must be installed perpendicular to the surface unless advised otherwise.

No holes are to be cut or formed in SFS steelwork without prior reference to Metsec. 72mm deep x 32mm wide service slots can be provided 600mm from each end of studs / joists on request.

For technical advice relating to the specification, design and installation of Metsec systems, contact the Metsec Framing Division Support Team - tel: 0121 601 6000, email: framing@metsec.com

Gyproc plasterboards are screw-fixed to Metsec stud sections to form the lining. Screw-fix boards to framing members at 300mm centres, using Gyproc Jack-Point Screws. All board joints should be taped and finished in accordance with the guidance set out in the British Gypsum **SITE BOOK**, available to download from www.british-gypsum.com

For advice on the specification and installation of British Gypsum linings, contact the British Gypsum Drywall Academy on tel: 0844 800 1991, or email: bgtechnical.enquiries@bpb.com

Performance (▶ Refer to **section 3 - Basic principles of system design**)

BS Table 1 – Non-loadbearing steel frame system - protecting loadbearing structural steel
Solutions to satisfy the requirements of *BS 476: Part 20: 1987* (loadbearing capacity)

1

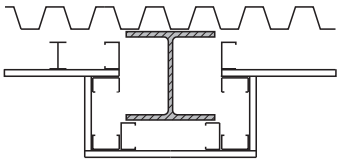

Board linings to one side of Metsec framework, forming an independent lining to structural steel columns. Linings as in table.

Board type	Lining thickness mm	Fire protection mins	Section factor[1] A/V (Hp/A) m^{-1}
FireLine	1 x 12.5	30	Up to 300
FireLine	1 x 12.5	60	Up to 165
FireLine	1 x 15	30	Up to 300
FireLine	1 x 15	60	Up to 195
WallBoard or SoundBloc	2 x 12.5	30	Up to 300
WallBoard or SoundBloc	2 x 15	60	Up to 300
FireLine	2 x 12.5	60	Up to 300
FireLine	2 x 12.5	90	Up to 200
FireLine	2 x 15	90	Up to 300

[1] Based on four-sided exposure. Protection is afforded to universal column sections as described in *BS 4: Part 1*. Based on critical temperature 550°C (information on other critical temperatures is available).

NB The fire resistance and sound insulation performances are for imperforate walls incorporating boards with all joints taped and filled, or skimmed according to British Gypsum's recommendations. The quoted performances are achieved only if British Gypsum components are used throughout, and the Company's fixing recommendations are strictly observed. Any variation in the specifications should be checked with British Gypsum.

NB For improved durability and impact resistance, the outer layer of board can be replaced with a layer of Gyproc DuraLine.

NB The above table is based on a minimum 10mm airspace between the back of the inner lining board and the structural steel, with no vertical board joints aligning with the structural steel.

BS Table 2 – Loadbearing steel frame system - external walls
Solutions to satisfy the requirements of *BS 476: Part 21: 1987*

1

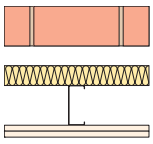

103mm brickwork, 50mm low emissivity clear cavity, low emissivity faced insulation, insulation between Metsec 100M12 studs at 600mm centres. Board linings as in table.

2

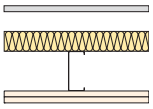

Rainscreen cladding, well vented clear cavity, insulation, insulation between Metsec 100M12 studs at 600mm centres. Board linings as in table.

3

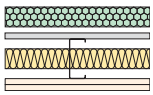

Insulated external render system (unbridged), 12mm sheathing board, insulation between Metsec 100M12 studs at 600mm centres. Board linings as in table.

Detail	Board type	Lining thickness mm	Load bearing ratio %	R-value of insulation between studs m^2K/W	Combined R-value of insulation external side of studs and low emissivity cavity (where applicable) m^2K/W	U-value[2] W/m^2K	Metsec system reference
60 minutes fire resistance [1] BS							
1	WallBoard	2 x 15	67	1.39	2.13	0.29	MFD380
1	WallBoard	2 x 15	67	2.78	2.13	0.25	MFD380
2	WallBoard	2 x 15	67	2.78	1.56	0.30	MFD383
2	WallBoard	2 x 15	67	2.78	2.17	0.26	MFD383
3	WallBoard	2 x 15	67	1.39	1.88	0.29	MFD395
3	WallBoard	2 x 15	67	2.78	1.88	0.25	MFD395

[1] Exposed to fire on the room side.
[2] Thermal performance values assume normal exposure conditions.

NB Performance data applies to loadbearing construction details, contact Metsec for all performance substantiation.

NB A vapour control layer may be required in all solutions.

Table 3 – Loadbearing steel frame system - internal walls
Solutions to satisfy the requirements of *BS 476: Part 21: 1987*

1

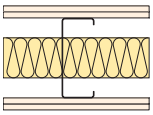

Metsec stud at 600mm centres.
Stud size, insulation and linings as in table.

2

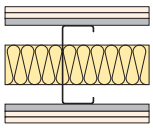

Metsec stud at 600mm centres, with Gypframe RB1 Resilient Bar to both sides. Stud size, insulation and linings as in table.

Detail	Board type	Stud size mm	Lining thickness mm	Insulation type	Load bearing ratio %	Sound insulation[2] R_w (R_w + Ctr) dB	Metsec system reference
60 minutes fire resistance [1] BS							
1	FireLine	100	2 x 12.5	100mm Isover Modular Roll	67	55	MFD351
1	WallBoard	100	2 x 15	50mm Isover Acoustic Slab	67	48	MFD371
2	SoundBloc	70	2 x 15	25mm Isover APR 1200	67	59 (51)	MFD362
2	SoundBloc	100	2 x 15	50mm Isover Acoustic Slab	67	61 (54)	MFD374

[1] Estimated 90 minutes in non-axial loaded wall situations (non-loadbearing, *BS 476: Part 22*).
[2] Sound insulation values are for airtight constructions in the absence of flanking sound transmission.

NB Performance data applies to loadbearing construction details, contact Metsec for all performance substantiation.

Table 4 – Loadbearing steel frame system - joisted floors
Solutions to satisfy the requirements of *BS 476: Part 21: 1987*

1

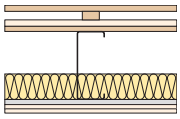

18mm chipboard, battened floating floor, 19mm Gyproc Plank, 15mm plywood to one side of 200mm Metsec joists at 600mm centres. 75mm Isover Steel Frame Infill Batt (SF2) in the cavity. Gypframe RB1 Resilient Bars and two ceiling linings as in table.

Detail	Board type	Ceiling lining thickness mm	Load bearing ratio %	Sound insulation Airborne R_w (R_w + Ctr) dB	Sound insulation Impact L_{nw} dB	Metsec system reference
60 minutes fire resistance BS						
1	FireLine	2 x 12.5	80	62 (52)	51	MFD384

NB Ceiling and floating floor details used in conjunction with joisted floors will vary to suit site requirements.

NB Contact Metsec for all performance substantiation.

Design

General
Metsec's SFS fast-track building system is designed using the FrameSPEC software program, developed by Metsec, which optimises the stud sections, spacing and anchorage according to the required floor-to-floor heights, deflection criteria and lateral wind pressures. Being pre-engineered off-site, Metsec's SFS is lighter and quicker to install than other construction methods.

Services
All Metsec SFS stud sections feature a 72mm x 32mm slot, which is located 600mm from either end of the section. This aperture allows for the easy routing of services through the frame at the time of installation without any resultant loss of internal space.

Cavity barriers
Properly constructed cavity barriers must be provided in accordance with the requirements of the relevant Building Regulations. The nature of these cavity barriers will vary according to the design requirements of each particular project.

Electrical
The installation of electrical services should be carried out in accordance with *BS 7671*. The cut-outs in the stud sections are suitable for routing electrical services.

Cladding support
Metsec SFS can support most external cladding systems with the exception of heavy masonry, which should be supported off the primary framework of the structure. The actual support details will vary accordingly and are designed by Metsec on a project specific basis.

Wind loading
Metsec SFS walls are designed to accommodate wind loadings and are designed by Metsec on a project specific basis.

Window and door apertures
Allowance should be made for the plasterboard lining returns at window and door apertures. These will vary on a project specific basis according to the fire performance requirements of the structure. Full details will be provided by Metsec for each project.

Movement joints
These should always be provided to coincide with the movement joints in the main frame of the structure.

Deflection
All SFS walls require deflection head details. The Metsec Slotted Head Track solution, removes the need for auxiliary components.

Sustainability
The excellent 94% combined re-use and recycling figure[1] for constructional steelwork ensures that sustainability objectives can also be met.

[1] British Constructional Steelwork Association (BCSA) publication No. 35/03.

▶ Please refer to **section 3 - Basic principles of system design** for general guidance

Construction details

1 Detail SF1

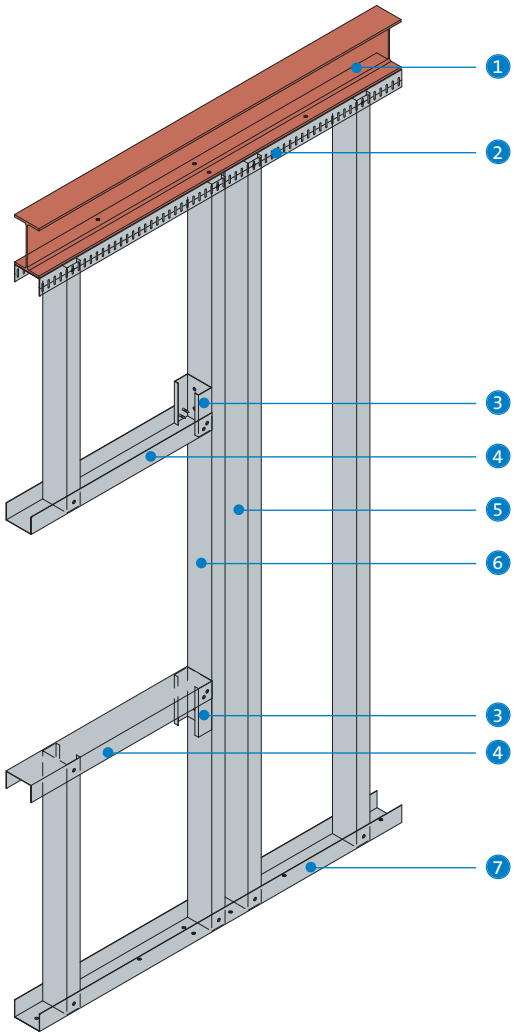

1 Primary frame
2 Slotted deflection head track fixed to steel beam, additional fixings at jamb
3 150mm length of stud fixed to jamb
4 Track
5 Additional stud for brick tie
6 Jamb stud
7 Base track fixed to concrete slab, additional fixings at jamb

Loadbearing - Metsec MetFRAME

Loadbearing structural steel frame systems

Crispin Street, London

Loadbearing - Metsec MetFRAME

The Metsec MetFRAME building system features cold-rolled, light gauge galvanised steel sections to create pre-fabricated panels, which can be bolted together on site to create the building superstructure. This provides a fast-track solution for medium rise structures, in line with the demands of Modern Methods of Construction.

Each MetFRAME project is designed by Metsec's own team of structural engineers, and drawn in-house. Metsec approved contractors pre-assemble panels within their own factories, then erect the structure on-site. This entire process is underwritten by Metsec's own Professional Indemnity Insurance cover.

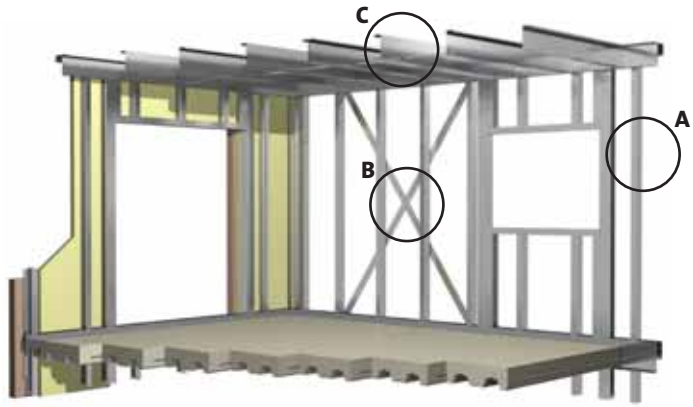

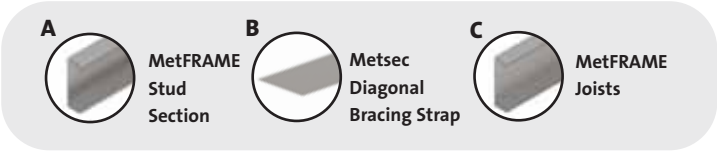

Key facts

- Pre-engineered off-site for quick installation
- Provides early weather protection to the structure
- Lightweight, dry construction
- Wind posts not required
- Provides lateral support for external cladding
- Easy to insulate thermally and acoustically

Applications

A wide range of applications.

Sector

- ✓ Office / commercial
- ✓ Education
- ✓ Custodial
- ✓ High-rise multi-occupancy
- ✓ Retail
- ✓ Healthcare
- ✓ Housing
- ✓ Auditoria
- ✓ Sport and leisure
- ✓ Industrial
- ✓ Apartment buildings

System solutions

Metsec MetFRAME is pre-fabricated to meet project specific requirements, therefore no standard system solutions are presented in this section. Please contact Metsec to discuss your project.

Example system components

Framing - Metsec components

Components for MetFRAME walls, floors and roofs are designed to suit specific project requirements.

Board products

Gyproc WallBoard[1]

Thickness	12.5mm
Width	1200mm

Gyproc SoundBloc[1]

Thickness	12.5, 15mm
Width	1200mm

Gyproc DuraLine[1]

Thickness	15mm
Width	1200mm

Gyproc Plank

Thickness	19mm
Width	600mm

Gyproc FireLine[1]

Thickness	15mm
Width	1200mm

[1] Moisture resistant boards are specified in intermittent wet use areas, e.g. shower cubicles.

Fixing and finishing products

Gyproc Jack-Point Screws
25mm, 35mm, 41mm and 60mm for fixing boards to stud framing.

Gyproc Sealant
Sealing air paths for optimum sound insulation.

Gyproc jointing materials
For seamless jointing.

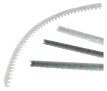

Gyproc edge and angle beads
Protecting and enhancing board edges and corners.

Thistle Board Finish or Thistle Multi-Finish
To provide a plaster skim finish.

or

Thistle Durafinish
To provide improved resistance to accidental damage.

Insulation products

Isover APR 1200
For thermal and acoustic performance.

Isover Modular Roll
For thermal and acoustic performance.

Isover Acoustic Slab
For thermal and acoustic performance.

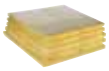

Isover Steel Frame Batt (SF2)
50mm, for thermal and acoustic insulation.

Isover Steel Frame Infill Batt (SF2)
For thermal and acoustic performance.

Insulated external render system (by others)
For building envelope and thermal performance.

Rigid Foam Insulation (by others)
Foil faced rigid PIR insulation board.

Installation overview

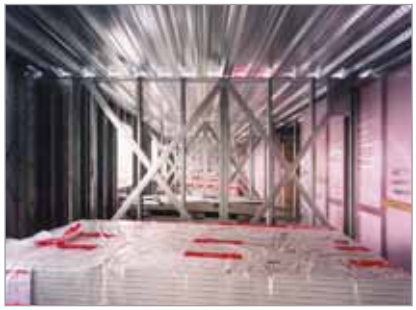

MetFRAME
All MetFRAME projects are erected by Metsec approved contractors who are experienced in the installation of loadbearing MetFRAME walls, floors and roof structure, and who can also source any non-Metsec supplied items, e.g. profiled steel floor decking, reinforcement.

MetFRAME projects are fully detailed in advance, and all MetFRAME components are supplied cut to length and with all holes punched. MetFRAME walls are pre-panelized off-site by the approved installer.

Studs are typically 100mm deep at 600mm centres, but the stud depth, gauge and centres can be varied to suit the exact application / loading conditions. Panels will have a base track and a top track or zed ledgers where floor support is required.

During panel manufacture, insulation and brick tie channels or boarding to suit a rendered or clad finish are applied. Heavier claddings, such as brickwork, rendered blockwork or stone, should be self-supporting vertically, including at opening positions, but are restrained laterally by the wall studs. Lighter finishes, such as rendered board, timber shiplap cladding and profiled steel cladding, can all be supported vertically and laterally by the system.

By fixing rigid insulation or board onto the external panels prior to installation on site, early weather protection of the building can be achieved, allowing other internal fitting trades to work inside the structure and therefore removing external cladding from the critical path.

Several methods of floor construction can be used dependant upon span and loading requirements:

- Composite concrete slabs using profiled metal decking with either a powerfloated or screeded finish, or with a lightweight floating floor laid over. Where reinforced concrete slabs are used, they are designed by Metsec.
- Floor panels of Metsec C-section joists are detailed and supplied in a similar fashion to the wall panels. These are boarded at panel assembly stage to provide a working deck as soon as they are fixed into position.
- Individually installed cold-rolled steel joists, with a maximum depth of 402mm, can be used for longer spans, available from the standard Metsec section range.

If required, hot-rolled elements are incorporated into the MetFRAME structure with box section posts of the same depth as the studs built into wall panels. Long-span floor / roof support beams can be connected to either hot or cold-rolled posts / studs.

Roof systems may be cold-rolled purlins, metal or timber truss rafters, or a combination of these. Truss rafters typically span between the front and rear walls. Cold-rolled purlins typically span between cross walls.

For technical advice relating to the specification, design and installation of Metsec systems, contact the Metsec Framing Division Support Team - tel: 0121 601 6000, email: framing@metsec.com

Gyproc plasterboards are screw-fixed to Metsec stud sections to form the lining. Screw-fix boards to framing members at 300mm centres, using Gyproc Jack-Point Screws. All board joints should be taped and finished in accordance with the guidance set out in the British Gypsum **SITE** BOOK, available to download from www.british-gypsum.com

For advice on the specification and installation of British Gypsum linings, contact the British Gypsum Drywall Academy on tel: 0844 800 1991, or email: bgtechnical.enquiries@bpb.com

Loadbearing - timber stud

Traditional stud walls with single or twin frames

This section includes updated information, added since it was first published in July 2009. Please see the WHITE BOOK update document for details.
Last updated 21/01/2011

George Wimpey,
Chestnut Grove, West London
Images courtesy of Taylor Wimpey

Loadbearing - timber stud

Approved Robust Detail (RD) Performance

35 – 63 R_w dB

30 – 120 mins

Timber stud separating or compartment walls are specified as fire and sound resisting walls in residential units, such as flats and apartments, to meet the requirements of Building Regulations.

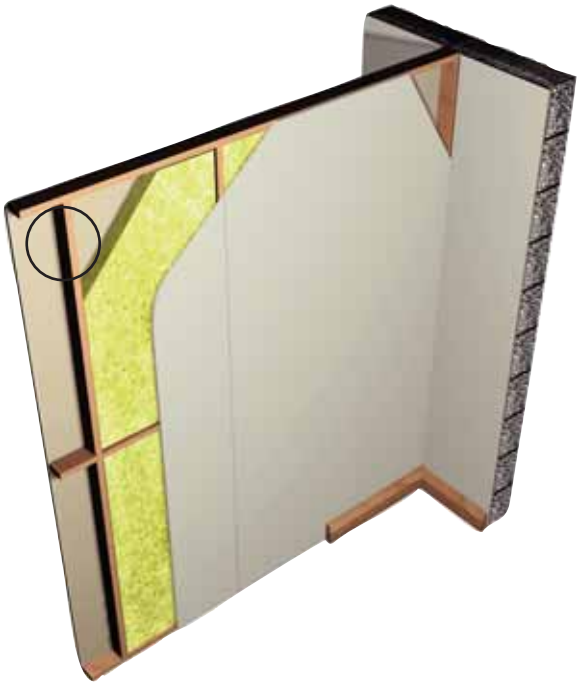

Timber studs

Key facts

- Loadbearing constructions
- Can achieve high levels of fire resistance
- Achieves Building Regulations Approved Document E sound resisting internal partition requirements

Applications

A wide range of applications.

Sector

- ✓ Education
- ✓ Apartment buildings
- ✓ Healthcare
- ✓ High-rise multi-occupancy
- ✓ Housing

System components

Framing

Timber studs (by others)
Typically 63mm to 100mm depth; 38mm to 50mm width.

Timber battens (by others)
As required.

Board products

Gyproc WallBoard[1 2]

Thickness	12.5, 15mm
Width	900, 1200mm

Gyproc SoundBloc[1]

Thickness	12.5, 15mm
Width	1200mm

Gyproc Plank

Thickness	19mm
Width	600mm

Gyproc FireLine[1 2]

Thickness	12.5, 15mm
Width	900, 1200mm

Glasroc F MULTIBOARD

Thickness	10, 12.5mm
Width	1200mm

[1] Moisture resistant boards are specified in intermittent wet use areas, e.g. shower cubicles.
[2] Also available in DUPLEX grades where vapour control is required.

Fixing and finishing products

Gyproc Drywall Timber Screws
For fixing boards to normal softwoods, super-dried timber and engineered 'I' beams.

Gyproc Sealant
Sealing air paths for optimum sound insulation.

Gyproc jointing materials
For seamless jointing.

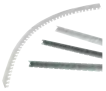

Gyproc edge and angle beads
Protecting and enhancing board edges and corners.

Thistle Board Finish or Thistle Multi-Finish
To provide a plaster skim finish.

or

Thistle Durafinish
To provide improved resistance to accidental damage.

Insulation products

Isover APR 1200
25mm, 50mm, 65mm and 100mm, to achieve acoustic performance.

Isover Spacesaver Ready-Cut
100mm, to achieve acoustic performance.

Isover Frame Batt 32
90mm, to achieve acoustic performance.

Installation overview

Timber framing is fixed to the perimeter, abutments, and to frame any openings, using suitable fixings. Timber studs are fixed at specified centres determined by loadbearing requirements, but still providing appropriate support for boards, as shown in **Table 1**. Additional framing is installed as required to support heavy fixtures. Boards are screw-fixed to framing members to form the lining. Horizontal board joints are backed with timber noggings.

Openings

Door openings are formed by fixing full height studs to each side, together with a timber head piece. Door facings are then fixed to the timber ground.

Services

Services are installed normally after one side is boarded. Timber noggings are fixed to support recessed switch boxes / socket outlets.

Table 1 - Gyproc or Glasroc F board fixed to timber supports

Board type	Thickness mm	Width mm	Recommended maximum stud centres[1] mm
Gyproc WallBoard	12.5	900	450
		1200	600
	15	900	450
		1200	600
Gyproc FireLine	12.5	900	450
		1200	600
	15	900	450
		1200	600
Gyproc Plank	19	600	600
Gyproc SoundBloc	12.5	1200	600
	15	1200	600
Glasroc F MULTIBOARD	10	1200	600
	12.5	1200	600

[1] Actual stud centres being determined by loadbearing requirements.

For full installation details, refer to the British Gypsum **SITE BOOK**, available to download from www.british-gypsum.com

Performance (▶ Refer to **section 3 - Basic principles of system design**)

EN

Table 1a – 75mm timber stud partitions
Solutions to satisfy the requirements of *BS EN 1365-1: 1999 (Loadbearing)*

1

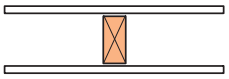

One layer of board each side of timber studs at 600mm centres. Insulation and board linings as in table.

2

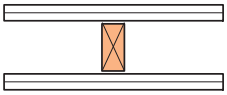

Two layers of board each side of timber studs at 600mm centres. Insulation and board linings as in table.

Detail	Partition thickness	Board type	Lining thickness	Minimum stud size	Maximum load ratio	Sound insulation R_w Without insulation	Sound insulation R_w With 25mm Isover APR 1200	System reference
	mm		mm	mm		dB	dB	
30 minutes fire resistance EN								
1	105	WallBoard	1 x 15	75 x 38	60%	37	40	A026002/6
1	105	SoundBloc	1 x 15	75 x 38	60%	40	43	A026014/17
60 minutes fire resistance EN								
2	115	Glasroc F MULTIBOARD	2 x 10	75 x 38	60%	38	-	G106004
2	125	FireLine	2 x 12.5	75 x 38	60%	38	42	A026028/9
90 minutes fire resistance EN								
2	125	Glasroc F MULTIBOARD	2 x 12.5	75 x 38	60%	37	-	G106005
2	135	FireLine	2 x 15	75 x 38	100%	38	42	A026030/1

NB The fire resistance and sound insulation performances are for imperforate partitions, walls and ceilings incorporating boards with all joints taped and filled, or skimmed according to British Gypsum's recommendations. The quoted performances are achieved only if British Gypsum components are used throughout, and the Company's fixing recommendations are strictly observed. Any variation in the specifications should be checked with British Gypsum.

BS Table 1b – 75mm and 100mm timber stud partitions
Solutions to satisfy the requirements of *BS 476: Part 21: 1987 (Loadbearing)*

1

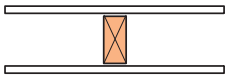

One layer of board each side of timber studs at 600mm centres. Insulation and board linings as in table.

2

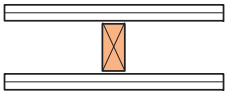

Two layers of board each side of timber studs at 600mm centres. Insulation and board linings as in table.

Detail	Partition thickness	Board type	Lining thickness	Minimum stud size	Maximum load ratio	Sound insulation R_w Without insulation	Sound insulation R_w With 25mm Isover APR 1200	System reference
	mm		mm	mm		dB	dB	
30 minutes fire resistance BS								
1	100	WallBoard	1 x 12.5	75 x 38	60%	35	36	A026001/005
1	100	SoundBloc	1 x 12.5	75 x 38	60%	38	40	A026011/016
1	105	SoundBloc	1 x 15	75 x 38	60%	40	43	A026014/017
60 minutes fire resistance BS								
2	115	Glasroc F MULTIBOARD	2 x 10	75 x 50	100%	38	-	G106004
2	125	WallBoard	2 x 12.5	75 x 38	60%	38	42	A026003/007
2	125	SoundBloc	2 x 12.5	75 x 38	60%	44	46	A026015/018
1	130	FireLine	1 x 15	100 x 50	55%	38	-	A026023
90 minutes fire resistance BS								
2	125	Glasroc F MULTIBOARD	2 x 12.5	75 x 38	60%	37	-	G106005
120 minutes fire resistance BS								
2	160	FireLine	2 x 15	100 x 50	55%	41	-	A026025

NB The fire resistance and sound insulation performances are for imperforate partitions, walls and ceilings incorporating boards with all joints taped and filled, or skimmed according to British Gypsum's recommendations. The quoted performances are achieved only if British Gypsum components are used throughout, and the Company's fixing recommendations are strictly observed. Any variation in the specifications should be checked with British Gypsum.

Performance (▶ Refer to **section 3 - Basic principles of system design**)

EN

Table 2a - 89mm timber stud compartment / sound insulating walls
Solution to satisfy the requirements of *BS EN 1365-1: 1999 (Loadbearing)*

1

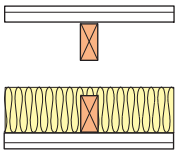

Two separate timber frames spaced 50mm apart, consisting of 89mm x 38mm timber studs at 600mm centres with noggings. Two layers of board each side. 100mm Isover APR 1200 between the studs on one side. Linings as in table.

Detail	Partition thickness mm	Board type	Lining thickness mm	Minimum stud size mm	Maximum load ratio	Sound insulation R_w (R_w + Ctr) dB	System reference
60 minutes fire resistance EN							
1	293	Plank + FireLine	19 + 12.5	89 x 38	60%	63 (51)	A036003

NB The fire resistance and sound insulation performances are for imperforate partitions, walls and ceilings incorporating boards with all joints taped and filled, or skimmed according to British Gypsum's recommendations. The quoted performances are achieved only if British Gypsum components are used throughout, and the Company's fixing recommendations are strictly observed. Any variation in the specifications should be checked with British Gypsum.

BS Table 2b - 75mm and 89mm timber stud compartment / sound insulating walls
Solutions to satisfy the requirements of *BS 476: Part 21: 1987 (Loadbearing)*

1

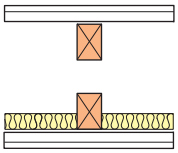

Two separate timber frames spaced 50mm apart, consisting of 89mm x 38mm timber studs at 600mm centres with noggings. Two layers of board each side. 25mm Isover APR 1200 between the studs on one side. Linings as in table.

2

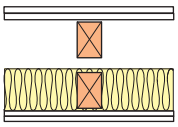

Two separate timber frames spaced 50mm apart, consisting of 89mm x 38mm timber studs at 600mm centres with noggings. Two layers of board each side. 100mm Isover Spacesaver Ready-Cut between the studs on one side. Linings as in table.

3

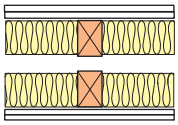

Two separate timber frames spaced a minimum of 50mm apart (240mm minimum between inner facings of wall linings). Two layers of board each side. 65mm Isover APR 1200 or 90mm Isover Frame Batt 32 between the studs in each timber frame. Linings as in table.

4

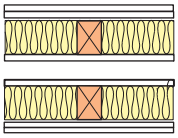

Two separate timber frames, each with a 9mm minimum thick sheathing board, spaced a minimum of 50mm apart (240mm minimum between inner facings of wall linings). Two layers of board each side. 65mm Isover APR 1200 or 90mm Isover Frame Batt 32 between the studs in each timber frame. Linings as in table.

Detail	Partition thickness mm	Board type	Lining thickness mm	Minimum stud size mm[1]	Maximum load ratio	Sound insulation R_w (R_w + Ctr) dB	System reference
60 minutes fire resistance BS							
2	290	SoundBloc	2 x 15	89 x 38	80%	61 (53)	A036002
1	293	Plank + WallBoard	19 + 12.5	89 x 38	80%	63 (51)	A046022
3	300[1]	SoundBloc or Plank + WallBoard	2 x 15 19 + 12.5	-	-	RD[2]	RD[2]
4	300[1]	SoundBloc or Plank + WallBoard	2 x 15 19 + 12.5	-	-	RD[3]	RD[3]

[1] Subject to timber size.
[2] RD = Approved Robust Detail Specification E-WT-1. For more information, visit www.robustdetails.com
[3] RD = Approved Robust Detail Specification E-WT-2. For more information, visit www.robustdetails.com

NB The fire resistance and sound insulation performances are for imperforate partitions, walls and ceilings incorporating boards with all joints taped and filled, or skimmed according to British Gypsum's recommendations. The quoted performances are achieved only if British Gypsum components are used throughout, and the Company's fixing recommendations are strictly observed. Any variation in the specifications should be checked with British Gypsum.

Design

Planning - key factors
The position of services and heavy fixtures should be pre-determined and their installation planned into the frame erection stage.

To minimise the risk of cracking at the plasterboard joints, seasoned timber with a moisture content not exceeding that recommended in *BS 5268: Part 2* should be used. The contractor should ensure that timber supports are accurately spaced, aligned, and levelled.

Robust Detail specifications must be registered with Robust Details Limited prior to construction.

Cavity fire barriers
Cavity barriers may be required to satisfy the requirements of Building Regulations.
▶ Refer to **section 10 – Cavity fire barriers.**

Services
Penetrations
Penetrations of fire-resistant constructions for services need careful consideration to ensure that the integrity of the element is not impaired, and also that the services themselves do not act as the mechanism of fire spread.
▶ Refer to **section 3.5 – Service installations.**

Electrical
Electrical and other small service runs can be routed within the timber stud cavity. The installation of electrical services should be carried out in accordance with *BS 7671*. Switch boxes and socket outlets can be supported from timber stud noggings.
▶ Refer to **section 3.5.2 – Service penetrations and fixing into drywall systems.**

Strength and robustness
Timber should be aligned and level, and should meet the requirements of *BS 5268: Part 2*. The dimensions and assembly of timber supports should be sufficient to allow positive fixing of plasterboard without bounce or undue deflection because of screwing or other applied force. When the above fixing conditions cannot be met, a timber batten should be securely fixed to the side of the timber support to increase the bearing surface.

Where boards are fixed at maximum centres in adverse conditions, the standard of lining can be affected. Adverse conditions can generally be described as conditions where high humidity occurs, principally in the cold, damp, autumn / winter period. They also refer to buildings under construction over this period, where both the structure and wet applications such as plastering and screeding are subject to slow drying conditions. In these adverse conditions there is a risk of the plasterboard bowing and therefore additional plasterboard support framing should be incorporated.

Partition junctions
At a 'T' junction, a ladder frame should be constructed between studs to provide fixing points for the abutting partition, and to support the lining (see **Construction details – 2**). The horizontal members of the frame should be at 600mm maximum centres.

Fixing to super-dried timber
It has been established by test that Gyproc Drywall Timber Screws are the preferred solution for fixing to standard softwood or super-dried timber (approximately 12% moisture content).

Nail popping
Loosening of nails in timber can occur through timber shrinkage, or as a result of fixing boards to misaligned or twisted framing. To reduce the risks, boards should be fixed tight to framing members using Gyproc Drywall Timber Screws.

Load ratio
Loadbearing partitions listed in **Tables 1a, 1b, 2a** and **2b** have been tested, assessed or calculated at the quoted load ratio.
▶ Refer to **section 3.1.2 – Principles of fire performance.**

Fixtures
For medium to heavyweight fixtures, screw fixings can be made directly into the timber supports. Additional studs or timber noggings should be installed as appropriate. For lightweight fixtures, suitable proprietary plasterboard fixing devices can be used.
▶ Refer to **section 3.5.2 – Service penetrations and fixing into drywall systems.**

Board finishing
▶ Refer to **section 13 – Finishing systems and decorative effects.**

▶ Please refer to **section 3 - Basic principles of system design** for general guidance

Construction details

1 Head and base

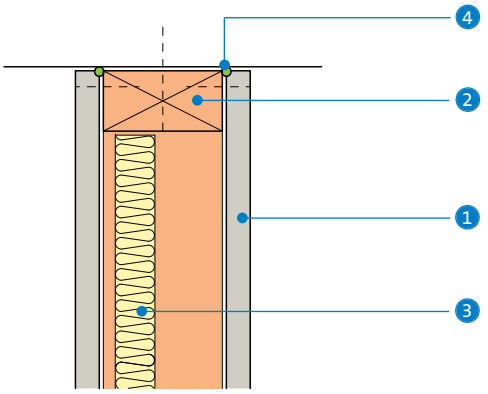

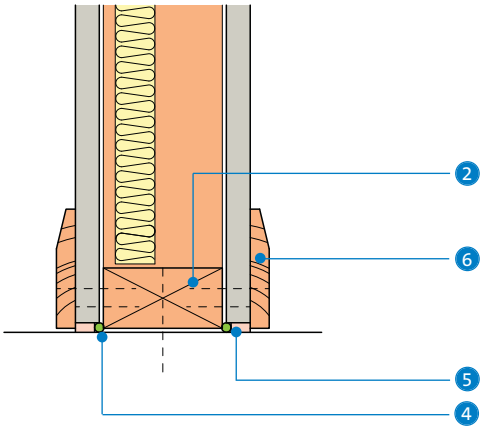

2 'T' junction between studs

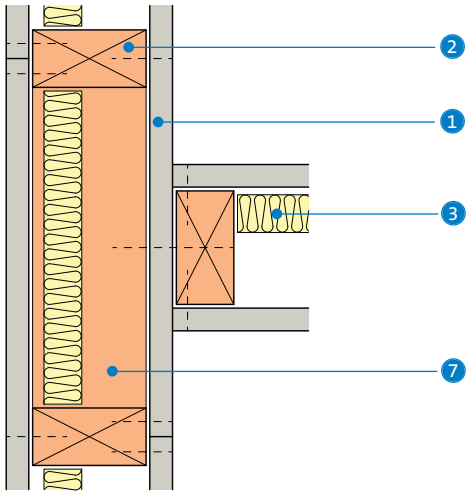

3 'T' junction at stud

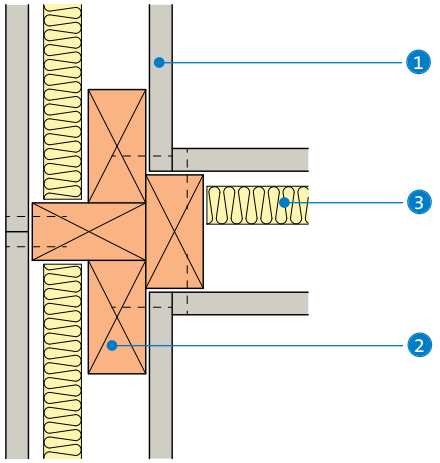

4 Internal / external corner

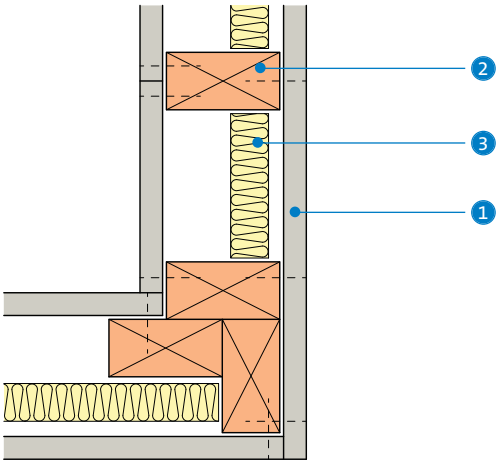

5 Door jamb

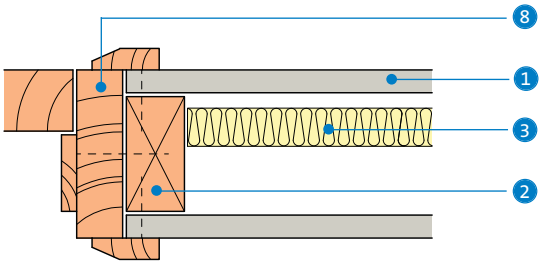

1. Gyproc plasterboard
2. Timber framing
3. Isover insulation
4. Gyproc Sealant
5. Bulk fill with Gyproc jointing materials (where gap exceeds 5mm)
6. Skirting
7. Timber noggings at 600mm centres
8. Timber door frame and architrave

Loadbearing - timber frame

Drylining to external timber frame walls

This section includes updated information, added since it was first published in July 2009. Please see the WHITE BOOK update document for details.
Last updated 21/01/2011

George Wimpey,
Chestnut Grove, West London
Images courtesy of Taylor Wimpey

Loadbearing - timber frame

40 – 55 R_w dB | 30 – 60 mins | 0.30 – 0.27 W/m²K

Gyproc plasterboards and thermal laminates are used as the internal lining to structural timber frame walls. Buildings constructed from timber frames include new houses and public / commercial developments, such as hotels and nursing homes. Typical external wall constructions are comprised of factory-produced timber panels and components to which a sheathing board and breather membrane are attached. The frame is tied to the external cladding using flexible wall ties.

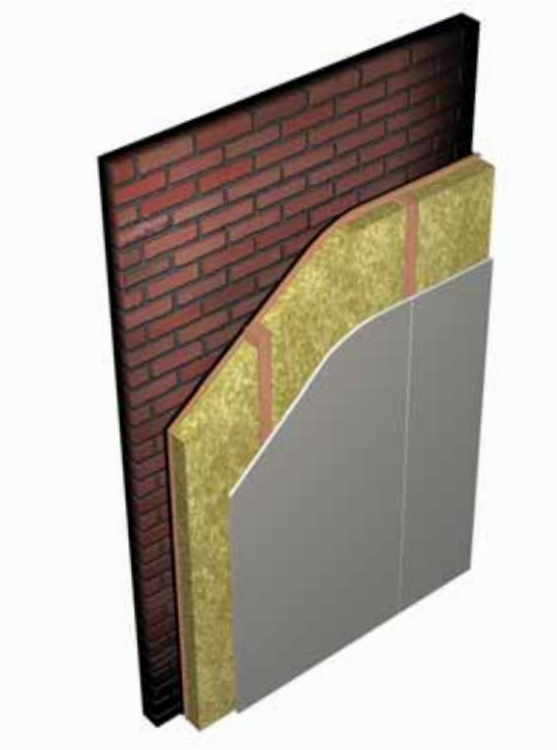

Key facts

- U-values down to 0.27 W/m²K
- Maintains a clear wall cavity
- Gyproc thermal laminates can be specified to achieve enhanced U-values
- Gyproc DUPLEX grade boards and 48mm Gyproc ThermaLine PLUS provide an internal lining incorporating a vapour control layer

Applications

A wide range of applications.

Sector

- ✓ Education
- ✓ Healthcare
- ✓ Housing
- ✓ Apartment buildings
- ✓ High-rise multi-occupancy

System components

Board products

Gyproc WallBoard

Thickness	12.5, 15mm
Width	1200mm

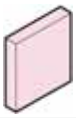

Gyproc FireLine

Thickness	12.5mm
Width	1200mm

Gyproc ThermaLine PLUS (with integral vapour check)

Thickness	48mm
Width	1200mm

Gyproc WallBoard DUPLEX

Thickness	12.5, 15mm
Width	1200mm

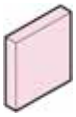

Gyproc FireLine DUPLEX

Thickness	12.5, 15mm
Width	1200mm

Fixing and finishing products

Gyproc Drywall Timber Screws
For fixing boards to normal softwoods, super-dried timber and engineered 'I' beams.

Gyproc Sealant
Sealing air paths for optimum sound insulation.

Gyproc jointing materials
For seamless jointing.

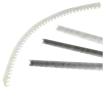

Gyproc edge and angle beads
Protecting and enhancing board edges and corners.

Thistle Board Finish or Thistle Multi-Finish
To provide a plaster skim finish.

or

Thistle Durafinish
To provide improved resistance to accidental damage.

Insulation products

Isover Frame Batt 32
90mm and 140mm, to achieve thermal and acoustic performance.

Isover Cavity Barrier
For sealing the cavity between the outer brick wall and the internal timber frame leaf.

Always use genuine branded British Gypsum components to qualify for **SpecSure**® lifetime warranty

Installation overview

Erecting the timber frame
Factory manufactured timber wall panels of the required dimensions are installed to form the structural building frame. Additional framing members are normally incorporated into wall units during factory construction, in the required positions, to accommodate door / window openings, adjoining partitions, and support heavy fixtures. Sheathing board and breather membrane are installed as specified. Electrical and other services are located within the stud cavity. Timber noggings are installed to support recessed switch boxes / socket outlets.

Installation of the loadbearing timber framework, sheathing board and breather membrane, should be carried out according to established timber frame building principles with reference to the UKTFA (United Kingdom Timber Frame Association) guidelines. A number of cladding options are available and the method of securing or tying-back the cladding will be determined by the designer.

Installing the insulation and lining
Isover Frame Batt 32 is friction-fitted in the stud cavity. Boards are fixed to framing members using Gyproc Drywall Timber Screws as specified.

For more information, visit www.timber-frame.org

Performance (▶ Refer to **section 3 - Basic principles of system design**)

EN

Table 1 – Timber frame external walls
Solutions to satisfy the requirements of *BS EN 1365-1-1999*

1

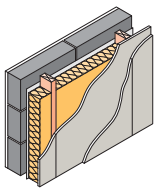

Cladding of 100mm aggregate block (λ = 0.49W/mK) with 20mm render, tied with stainless steel wall ties across a nominal 50mm clear cavity through breather membrane and sheathing board[2] to minimum 140mm x 38mm timber studs at max. 600mm centres. 140mm Isover Frame Batt 32 in stud cavity. Internal linings as in table. 60% load ratio.

2

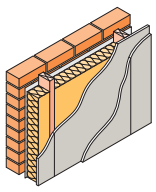

Cladding of 103mm facing brick (or rendered dense block) (λ = 0.75W/mK) tied with stainless steel wall ties across a nominal 50mm clear cavity through breather membrane and sheathing board[2] to minimum 140mm x 38mm timber studs at max. 600mm centres. 140mm Isover Frame Batt 32 in stud cavity. Internal linings as in table. 60% load ratio.

3

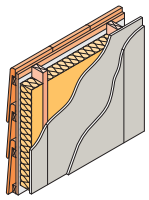

Cladding[1] comprising vertical tile hanging on treated 25mm timber battens fixed through breather membrane and plywood sheathing board[2] to minimum 140mm x 38mm timber studs at max. 600mm centres. 140mm Isover Frame Batt 32 in stud cavity. Internal linings as in table. 60% load ratio.

Detail	Nominal wall thickness mm	Board type	Lining thickness mm	U-value[4] W/m²K	Sound insulation R_w estimated[5] dB	System reference
30 minutes fire resistance EN						
3	205	WallBoard DUPLEX	1 x 15[3]	0.30	40	B606006
2	318	WallBoard DUPLEX	1 x 15	0.28	50	B606005
1	335	WallBoard DUPLEX	1 x 15	0.27	50	B606004
60 minutes fire resistance EN						
3	215	FireLine (inner layer) + FireLine DUPLEX (outer layer)	2 x 12.5[3]	0.30	45	B606009
2	328	FireLine (inner layer) + FireLine DUPLEX (outer layer)	2 x 12.5	0.28	55	B606008
1	345	FireLine (inner layer) + FireLine DUPLEX (outer layer)	2 x 12.5	0.27	55	B606007

[1] Other lightweight claddings, such as timber sidings, cementitious render, etc, can be used which may offer the same performance.
[2] Based on sheathing board with a vapour resistivity of less than 250MNs/gm. If greater, an additional vapour control layer positioned behind the Gyproc plasterboard is recommended.
[3] 15 minutes (minimum) fire insulation only.
[4] Enhanced U-values can be achieved, using a suitable Gyproc ThermaLine laminate in addition to that quoted above. Please contact the British Gypsum Drywall Academy for further guidance.
[5] These constructions have not been tested but an estimation of performance has been given. The overall sound insulation performance will vary depending on the density, porosity and permeability of the external element.

NB U-values are calculated by the proportional area method and use a typical timber fraction (the proportion of timber to mineral wool) of 15%. This follows the general guidance identified in the BRE 'Conventions for U-value Calculations'. The Thermal Conductivity (λ) value used of 0.12W/mK for timber is based on that applicable to the Spruce / Pine / Fir groups from North America and Europe used in timber frame structures.

NB The fire resistance and sound insulation performances are for imperforate partitions, walls and ceilings incorporating boards with all joints taped and filled, or skimmed according to British Gypsum's recommendations. The quoted performances are achieved only if British Gypsum components are used throughout, and the Company's fixing recommendations are strictly observed. Any variation in the specifications should be checked with British Gypsum.

NB The fire resistances quoted are for loadbearing walls tested with fire exposure to the internal face.

BS Table 2 – Timber frame. Typical external walls
Solutions to satisfy the requirements of *BS 476: Part 21: 1987*

1

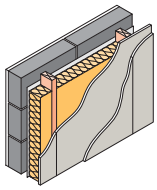

Cladding of 100mm aggregate block (λ = 0.47W/mK) with 20mm render, tied with stainless steel wall ties across a nominal 50mm clear cavity through breather membrane and sheathing board[2] to minimum 140mm x 38mm timber studs at max. 600mm centres. 140mm Isover Frame Batt 32 in stud cavity. Internal linings as in table. 100% load ratio.

2

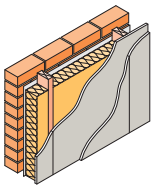

Cladding of 103mm facing brick (λ = 0.75W/mK) tied with stainless steel wall ties across a nominal 50mm clear cavity through breather membrane and sheathing board[2] to minimum 140mm x 38mm timber studs at max. 600mm centres. 140mm Isover Frame Batt 32 in stud cavity. Internal linings as in table. 100% load ratio.

3

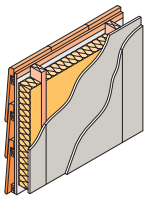

Cladding[1] comprising vertical tile hanging on treated 25mm timber battens fixed through breather membrane and plywood sheathing board[2] to minimum 140mm x 38mm timber studs at max. 600mm centres. 140mm Isover Frame Batt 32 in stud cavity. Internal linings as in table. 100% load ratio[3].

4

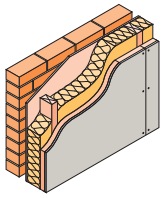

Cladding of 103mm facing brick (λ = 0.75W/mK) tied with stainless steel wall ties across a nominal 50mm clear cavity through breather membrane and sheathing board[2] to minimum 89mm x 38mm timber studs at max. 600mm centres. 90mm Isover Frame Batt 32 in stud cavity. Internal linings as in table. 100% load ratio.

Detail	Nominal wall thickness mm	Board type	Lining thickness mm	U-value[4] W/m²K	Sound insulation R_w estimated[5] dB	System reference
30 minutes fire resistance BS						
3	203	WallBoard DUPLEX	1 x 12.5[3]	0.30	40	A066003
2	316	WallBoard DUPLEX	1 x 12.5	0.28	50	A066002
1	333	WallBoard DUPLEX	1 x 12.5	0.27	50	A066001
4	300	ThermaLine PLUS	1 x 48	0.27	50	A066010
60 minutes fire resistance BS						
3	215	WallBoard (inner layer) + WallBoard DUPLEX (outer layer)	2 x 12.5[3]	0.30	45	A066009
2	328	WallBoard (inner layer) + WallBoard DUPLEX (outer layer)	2 x 12.5	0.28	55	A066008
1	345	WallBoard (inner layer) + WallBoard DUPLEX (outer layer)	2 x 12.5	0.27	55	A066007

[1] Other lightweight claddings, such as timber sidings, cementitious render, etc, can be used and will offer the same performance.
[2] Based on sheathing board with a vapour resistivity of less than 250MNs/gm. If greater, an additional vapour control layer positioned behind the Gyproc plasterboard is recommended.
[3] 15 minutes (minimum) fire insulation only.
[4] Enhanced U-values can be achieved, using a suitable Gyproc ThermaLine laminate in addition to that quoted above. Please contact the British Gypsum Drywall Academy for further guidance.
[5] These constructions have not been tested but an estimation of performance has been given. The overall sound insulation performance will vary depending on the density, porosity and permeability of the external element.

NB U-values are calculated by the proportional area method and use a typical timber fraction (the proportion of timber to mineral wool) of 15%. This follows the general guidance identified in the BRE 'Conventions for U-value Calculations'. The Thermal Conductivity (λ) value used of 0.12W/mK for timber is based on that applicable to the Spruce / Pine / Fir groups from North America and Europe used in timber frame structures.

NB The fire resistance and sound insulation performances are for imperforate partitions, walls and ceilings incorporating boards with all joints taped and filled, or skimmed according to British Gypsum's recommendations. The quoted performances are achieved only if British Gypsum components are used throughout, and the Company's fixing recommendations are strictly observed. Any variation in the specifications should be checked with British Gypsum.

NB The fire resistances quoted are for loadbearing walls tested with fire exposure to the internal face.

Design

Planning - key factors
To minimise the risk of cracking at the plasterboard joints, seasoned timber with a moisture content not exceeding that recommended in *BS 5268: Part 2* should be used. The contractor should ensure that timber supports are accurately spaced, aligned, and levelled. When designing timber frame buildings, the designer should take account of relevant British Standards and associated documents.

Cavity barriers
Cavity barriers may be required to satisfy the requirements of Building Regulations. An Isover Cavity Barrier may be required to seal the cavity between the outer brick wall and the internal timber frame leaf.
▶ Refer to **section 10 – Cavity fire barriers**.

Services
Penetrations
Penetrations of fire-resistant or sound-insulating constructions for services need careful consideration to ensure that the performance of the element is not downgraded and also that the services themselves do not act as the mechanism of fire spread or sound transmission.
▶ Refer to **section 3.5 – Service installations**.

Electrical
The installation of electrical services should be carried out in accordance with *BS 7671*. Electrical and other small service runs can be routed within the timber stud cavity. Concealed cables may need earthed metallic covering, or be enclosed in earthed conduit, trunking, or ducting, to satisfy *BS 7671*. Cables located within Isover insulation may need to be up-rated to counter the effect of overheating.
▶ Refer to **section 3.5.2 – Service penetrations and fixing into drywall systems**.

Strength and robustness
The dimensions and assembly of timber supports should be sufficient to allow positive fixing of plasterboard without bounce or undue deflection because of the nailing, screwing, or other applied force.

Where boards are fixed at maximum centres in adverse conditions the standard of lining can be affected. Adverse conditions can generally be described as conditions where high humidity occurs, principally in the cold, damp, autumn / winter period. They also refer to buildings under construction over this period, where both the structure and wet applications such as plastering and screeding are subject to slow drying conditions. In these adverse conditions there is a risk of the plasterboard bowing and therefore additional plasterboard support framing should be incorporated.

Partition junctions
Where partition junctions occur, additional studs can be specified within the factory-produced wall panels, and can be incorporated either during manufacture or on-site. Alternatively, a suitable ladder frame can be installed between vertical studs during site construction, with horizontal members at 600mm centres.

Nail popping
Loosening of nails in timber can occur through timber shrinkage, or as a result of fixing boards to misaligned or twisted framing. To reduce the risks, boards should be fixed tight to framing members using Gyproc Drywall Timber Screws.

Vapour control
A vapour control layer must be provided to the room side of the stud framework. DUPLEX variants of Gyproc plasterboards and 48mm Gyproc ThermaLine PLUS incorporate integral vapour control. Where a higher vapour resistance is required, a minimum 500 gauge polyethylene film vapour control layer can be used in conjunction with standard Gyproc plasterboard.

Sheathing board
OSB, or other suitable wood-based sheet material, is nailed to the timber frame at pre-determined centres. By providing resistance to wind loads, it strengthens the structure and gives the building the required stiffness and strength. For information on plasterboard contribution to racking resistance of timber frames refer to *BS 5268: section 6.1*.

Breather membrane
A suitable membrane is applied to the outer face of the sheathing board. The breather membrane keeps rain out of the structure during construction, but allows the wall to breathe.

Linings
Plasterboard linings can be fixed as soon as the building envelope is sealed, which may be prior to installing the external cladding, e.g. brickwork. Before installing plasterboard linings, any air gaps around the perimeter should be sealed. This will ensure that thermal and sound insulation requirements are not compromised. Sealing can be achieved using Gyproc Sealant (in conjunction with Gyproc Joint Filler for deeper gaps, e.g. at base of lining).

Fixtures
For medium to heavyweight fixtures, screw fixings can be made directly into the timber supports. Additional studs or timber noggings should be installed as appropriate. For lightweight fixtures, suitable proprietary plasterboard fixing devices can be used.
▶ Refer to **section 3.5.2 – Service penetrations and fixing into drywall systems**.

Board finishing
▶ Refer to **section 13 – Finishing systems and decorative effects**.

▶ Please refer to **section 3 - Basic principles of system design** for general guidance

Loadbearing - timber joist floors and ceilings

This section includes updated information, added since it was first published in July 2009. Please see the WHITE BOOK update document for details.
Last updated 21/01/2011

Bryant Homes,
The Grange, Desborough
Images courtesy of Taylor Wimpey

Loadbearing - timber joist floors and ceilings

36 – 66 R_w dB Airborne | 78 – 48 L_{nw} dB Impact | 30 – 90 mins | 0.25 – 0.14 W/m²K

Plasterboard lined timber joists are widely used in internal floors, separating floors and roof linings within residential and commercial applications to meet, or exceed, fire and sound insulation performance requirements of Building Regulations Approved Document E.

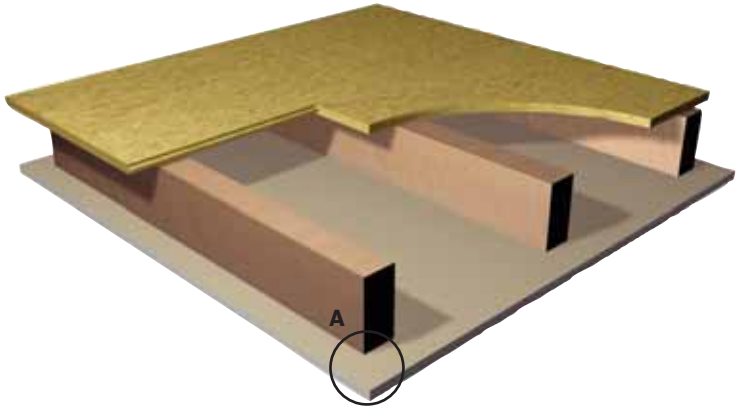

A Gyproc Drywall Timber Screw - direct fix

B Gypframe RB1 Resilient Bar OR 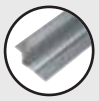 Gypframe RB2 SureFix Bar

Key facts

- Traditional and established method
- Use of Gyproc Drywall Timber Screws minimises fixing defects in direct fix applications
- Gypframe RB1 Resilient Bar and Gypframe RB2 SureFix Bar provide enhanced acoustic performance and eliminate nail popping

Applications

A wide range of applications.

Sector

- ✓ Education
- ✓ Healthcare
- ✓ Housing
- ✓ Apartment buildings
- ✓ High-rise multi-occupancy

System components

Gypframe metal products

RB1 Resilient Bar — **Length** 3000mm

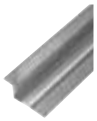

RB2 SureFix Bar — **Length** 3000mm

Board products

Gyproc WallBoard[1 2]
Thickness 12.5, 15mm
Width 900, 1200mm

Gyproc FireLine[2]
Thickness 12.5[1], 15mm
Width 900, 1200mm

Gyproc SoundBloc[2]
Thickness 12.5, 15mm
Width 1200mm

Gyproc Plank
Thickness 19mm
Width 600mm

Gyproc HandiBoard[1]
Thickness 9.5, 12.5mm
Width 600, 900mm

Gyproc ThermaLine SUPER
Thickness 30 - 90mm
Width 1200mm

Glasroc F MULTIBOARD
Thickness 6, 10, 12.5mm
Width 1200mm

Glasroc F FIRECASE
Thickness 15mm
Width 600, 1200mm

[1] Also available in DUPLEX grades where vapour control is required.
[2] Also available in MR version (moisture resistant).

Fixing and finishing products

Gyproc Drywall Timber Screws or Glasroc FireCase Screws
For a positive direct fix of boards to timber joists.

Gyproc Drywall Screws
For fixing boards to Gypframe Resilient Bars, and Gypframe Resilient Bars to timber joists.

Gyproc Sealant
Sealing air paths for optimum sound insulation.

Gyproc jointing materials
For seamless jointing.

Thistle Board Finish or Thistle Multi-Finish
To provide a plaster skim finish.

or

Thistle Durafinish
To provide improved resistance to accidental damage.

Insulation products

Isover APR 1200
100mm, to achieve acoustic performance.

Isover Spacesaver Ready-Cut
100mm and 150mm, to achieve acoustic performance.

Isover Sound Deadening Floor Slab
25mm, to achieve impact sound performance.

Isover Frame Batt 32
90mm and 140mm, to achieve thermal performance.

Isover Frame Batt 35
100mm, to achieve thermal performance.

Stone mineral wool (by others)
For fire-stopping.

Always use genuine branded British Gypsum components to qualify for **SpecSure**® lifetime warranty

Installation overview - Direct fix plasterboard ceiling

Boards are fixed to ceilings, prior to lining walls and partitions, with the long edges at right angles to the joists. Cut-ends are located over a joist or timber nogging support. Timber noggings are fitted, where required between joists at room perimeters to support board edges. Noggings may also be required to support board edges in the field of the boards. Boards are fixed to timber supports using Gyproc Drywall Timber Screws.

Installation overview - Indirect fix to Gypframe RB1 Resilient Bars and Gypframe RB2 SureFix Bars

The bars are fixed through the single fixing flange to the underside of timber joists (at 90˚ to them) using Gyproc Drywall Screws. The first and last rows of Gypframe RB1 Resilient Bars and Gypframe RB2 SureFix Bars are located at all wall perimeters. If the bars are not long enough to span the ceiling, butt the ends together directly under a joist and screw-fix through the flange of both ends. Boards are fixed to the underside of Gypframe RB1 Resilient Bars and Gypframe RB2 SureFix Bars with long board edges at right angles to the bars. When fixing boards, care must be taken to ensure that the plasterboard fixing screws do not make contact with the joists.

Performance (▶ Refer to **section 3 - Basic principles of system design**)

EN

Table 1a – Direct fix to new or existing solid timber joist floors
Solutions to satisfy the requirements of *BS EN 1365-2: 2000*

1

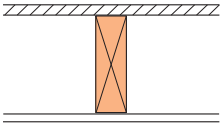

22mm t&g (softwood or chipboard) floor boarding over minimum 195mm x 38mm timber joists at 600mm centres. Noggings and linings as in table.

2

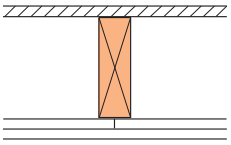

22mm t&g (softwood or chipboard) floor boarding over minimum 195mm x 38mm timber joists at 600mm centres. Noggings and linings as in table.

3

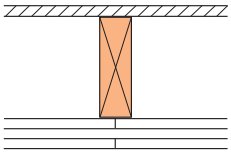

22mm t&g (softwood or chipboard) floor boarding over minimum 195mm x 38mm timber joists at 600mm centres (maximum). Noggings and linings as in table.

Detail	Nominal floor depth mm	Board type	Ceiling lining thickness mm	Noggings required	Maximum loadbearing ratio	Sound insulation R_w Airborne dB	Sound insulation L_{nw} Impact dB	System reference
30 minutes fire resistance EN								
1	227	Glasroc F MULTIBOARD	1 x 10	Yes[2]	100%	-	-	G106036
1	232	WallBoard	1 x 15	Yes[1]	100%	40	-	C106029
60 minutes fire resistance EN								
2	237	Glasroc F MULTIBOARD	2 x 10	Yes[2]	100%	-	-	G106022
2	242	FireLine	2 x 12.5	Yes[2]	100%	40	76	C016009
2	245	WallBoard (inner layer) + FireLine (outer layer)	12.5 + 15	Yes[1]	100%	40	76	C016008
90 minutes fire resistance EN								
3	255	FireLine	3 x 12.5	Yes[2]	100%	40	-	C016012

[1] At ceiling perimeter only.
[2] At ceiling perimeter and to support outer layer ceiling board joints (38mm x 38mm minimum).

NB The fire resistance and sound insulation performances are for imperforate partitions, walls and ceilings incorporating boards with all joints taped and filled, or skimmed according to British Gypsum's recommendations. The quoted performances are achieved only if British Gypsum components are used throughout, and the Company's fixing recommendations are strictly observed. Any variation in the specifications should be checked with British Gypsum.

NB Where boards are fixed direct to timber joists, Gyproc Drywall Timber Screws should be used as opposed to nail-fixing to minimise the risk of fixing defects occurring.

BS Table 1b - Direct fix to new or existing solid timber joist floors
Solutions to satisfy the requirements of *BS 476: Part 21: 1987*

1

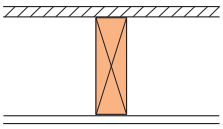

22mm t&g (softwood or chipboard) floor boarding over minimum 195mm x 38mm timber joists at 600mm centres. Noggings and linings as in table.

2

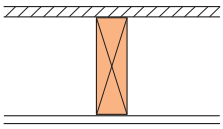

22mm t&g (softwood or chipboard) floor boarding over minimum 195mm x 38mm timber joists at 450mm centres. Noggings and linings as in table.

3

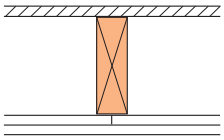

22mm t&g (softwood or chipboard) floor boarding over minimum 195mm x 38mm timber joists at 600mm centres. Noggings and linings as in table.

4

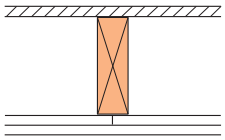

22mm t&g (softwood or chipboard) floor boarding over minimum 195mm x 38mm timber joists at 450mm centres. Noggings and linings as in table.

5

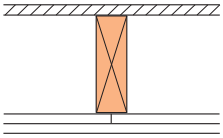

22mm t&g (softwood or chipboard) floor boarding over minimum 195mm x 50mm timber joists at 450mm centres. Noggings and linings as in table.

6

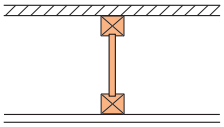

22mm t&g (softwood or chipboard) floor boarding over minimum 241mm timber 'I' joists at 600mm centres. Noggings and linings as in table.

Detail	Nominal floor depth mm	Board type	Ceiling lining thickness mm	Noggings required	Maximum loadbearing ratio	Sound insulation R_w Airborne dB	Sound insulation L_{nw} Impact dB	System reference
30 minutes fire resistance BS								
2	230	WallBoard	1 x 12.5	Yes[1]	60%	36	-	C014003
1	230	FireLine	1 x 12.5	Yes[2]	60%	38	-	C016004
1	232	WallBoard	1 x 15	Yes[1]	100%	40	-	C106029
6	278	WallBoard	1 x 15	Yes[1]	60%[3]	41	-	C206015
60 minutes fire resistance BS								
3	242	FireLine	2 x 12.5	Yes[2]	100%	40	76	C016009
4	245	WallBoard (inner layer) + FireLine (outer layer)	12.5 + 15	Yes[1]	100%	40	76	C016008
5	247	WallBoard	2 x 15	Yes[2]	60%	40	76	C016006
5	249	Plank (inner layer) + WallBoard (outer layer)	19 + 12.5	Yes[2]	60%	40	75	C016007
90 minutes fire resistance BS								
5	247	FireLine	2 x 15	Yes[2]	60%	40	78	C014011

[1] At ceiling perimeter only.
[2] At ceiling perimeter and to support outer layer ceiling board joints.
[3] This value is based on a test with a typical 'I' joist. Consult manufacturers directly for information on specific 'I' joists.

NB The fire resistance and sound insulation performances are for imperforate partitions, walls and ceilings incorporating boards with all joints taped and filled, or skimmed according to British Gypsum's recommendations. The quoted performances are achieved only if British Gypsum components are used throughout, and the Company's fixing recommendations are strictly observed. Any variation in the specifications should be checked with British Gypsum.

NB Where boards are fixed direct to timber joists, Gyproc Drywall Timber Screws should be used as opposed to nail-fixing to minimise the risk of fixing defects occurring.

NB All the 30 and 60 minute specifications in **Table 1b** can be used on the underside of an existing lath and plaster ceiling provided the existing ceiling is supported by chicken wire securely fixed to the joists and counter battened with minimum 38mm x 38mm timber at 600mm centres, with noggings to support the long edges of the outer layer board.

NB For plaster specifications refer to **section 11 – Plaster systems, Tables 1** and **2**.

NBS work section K10 - Plasterboard drylinings / partitions / ceilings; K11 - Rigid sheet flooring / sheathing / sarking / decking / linings / castings; K20 - Timber board flooring / sarking / linings / castings

Performance (▶ Refer to **section 3 - Basic principles of system design**)

EN

Table 2a – Indirect fix to new or existing solid timber joist floors
Solutions to satisfy the requirements of *BS EN 1365-2: 2000*

1

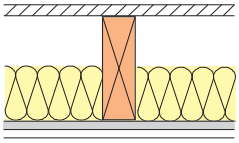

22mm t&g (softwood or chipboard) floor boarding over minimum 195mm x 38mm timber joists at 600mm centres. Gypframe RB2 SureFix Bars fixed to underside of joists at 450mm centres and at perimeter with ceiling linings as in table fixed into the bars only. 100mm Isover APR 1200 in the cavity.

2

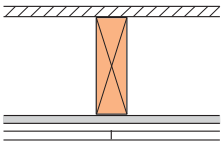

22mm t&g (softwood or chipboard) floor boarding over minimum 195mm x 38mm timber joists at 600mm centres. Gypframe RB1 Resilient Bars fixed to underside of joists at 450mm centres and at perimeter with ceiling linings as in table fixed into the bars only.

3

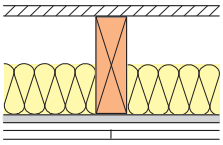

22mm t&g (softwood or chipboard) floor boarding over minimum 195mm x 38mm timber joists at 600mm centres. Gypframe RB1 Resilient Bars fixed to underside of joists at 450mm centres and at perimeter with ceiling linings as in table fixed into the bars only. 100mm Isover Spacesaver Ready-Cut in the cavity.

4

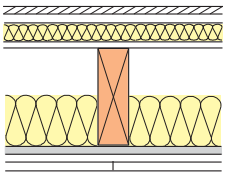

Typical platform floor construction (comprising walking surface of 18mm t&g wood board flooring, spot-bonded with Gyproc Sealant at 300mm centres to a substrate of Gyproc Plank laid on 25mm Isover Sound Deadening Floor Slab, laid on a minimum of 12mm wood-based sheet sub-deck nailed to the joists) over minimum 195mm x 38mm timber joists at 600mm centres. Gypframe RB1 Resilient Bars fixed to underside of joists at 450mm centres and at perimeter with ceiling linings as in table fixed into the bars only. 100mm Isover Spacesaver Ready-Cut in the cavity.

Detail	Nominal floor depth mm	Board type	Ceiling lining thickness mm	Maximum loadbearing ratio	Sound insulation R_w (R_w + Ctr) Airborne dB	 L_{nw} Impact dB	System reference
30 minutes fire resistance EN							
1	240	WallBoard	1 x 12.5	100%	41	76	C206006
60 minutes fire resistance EN							
2	258	FireLine	2 x 12.5	100%	45	72	C016031
3	263	SoundBloc	2 x 15	100%	54	60	C206009
4	315	SoundBloc	2 x 15	100%	64 (53)	54	C016040

NB The fire resistance and sound insulation performances are for imperforate partitions, walls and ceilings incorporating boards with all joints taped and filled, or skimmed according to British Gypsum's recommendations. The quoted performances are achieved only if British Gypsum components are used throughout, and the Company's fixing recommendations are strictly observed. Any variation in the specifications should be checked with British Gypsum.

NB Where boards are fixed direct to timber joists, Gyproc Drywall Timber Screws should be used as opposed to nail-fixing to minimise the risk of fixing defects occurring.

NBS work section K10 - Plasterboard drylinings / partitions / ceilings; K11 - Rigid sheet flooring / sheathing / sarking / decking / linings / castings; K20 - Timber board flooring / sarking / linings / castings

Table 2b - Indirect fix plasterboard to new or existing solid timber joist floors
Solutions to satisfy the requirements of *BS 476: Part 21: 1987*

1

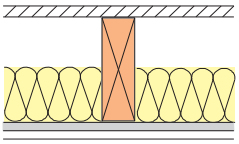

22mm t&g (softwood or chipboard) floor boarding over minimum 195mm x 38mm timber joists at 600mm centres. Gypframe RB2 SureFix Bars fixed to underside of joists at 450mm centres and at perimeter with ceiling linings as in table fixed into the bars only. 100mm Isover APR 1200 in the cavity.

2

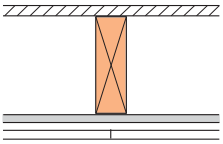

22mm t&g (softwood or chipboard) floor boarding over minimum 195mm x 38mm timber joists at 600mm centres. Gypframe RB1 Resilient Bars fixed to underside of joists at 450mm centres and at perimeter with ceiling linings as in table fixed into the bars only.

3

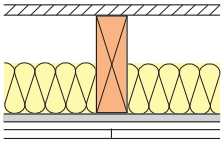

22mm t&g (softwood or chipboard) floor boarding over minimum 195mm x 38mm timber joists at 600mm centres. Gypframe RB1 Resilient Bars fixed to underside of joists at 450mm centres and at perimeter with ceiling linings as in table fixed into the bars only. 100mm Isover Spacesaver Ready-Cut in the cavity.

4

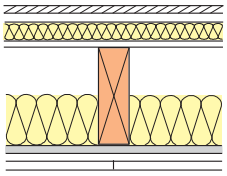

Typical platform floor construction (comprising walking surface of 18mm t&g wood board flooring, spot-bonded with Gyproc Sealant at 300mm centres to a substrate of Gyproc Plank laid on 25mm Isover Sound Deadening Floor Slab, laid on a minimum of 12mm wood-based sheet sub-deck nailed to the joists) over minimum 195mm x 38mm timber joists at 600mm centres. Gypframe RB1 Resilient Bars fixed to underside of joists at 450mm centres and at perimeter with ceiling linings as in table fixed into the bars only. 100mm Isover Spacesaver Ready-Cut in the cavity.

Detail	Nominal floor depth mm	Board type	Ceiling lining thickness mm	Maximum loadbearing ratio	Sound insulation R_w (R_w + Ctr) Airborne dB	Sound insulation L_{nw} Impact dB	System reference
30 minutes fire resistance BS							
1	240	WallBoard	1 x 12.5	100%	41	76	C206006
60 minutes fire resistance BS							
2	258	FireLine	2 x 12.5	100%	45	72	C016031
3	263	SoundBloc	2 x 15	100%	54	60	C206009
4	315	SoundBloc	2 x 15	100%	64 (53)	54	C016040

NB The fire resistance and sound insulation performances are for imperforate partitions, walls and ceilings incorporating boards with all joints taped and filled, or skimmed according to British Gypsum's recommendations. The quoted performances are achieved only if British Gypsum components are used throughout, and the Company's fixing recommendations are strictly observed. Any variation in the specifications should be checked with British Gypsum.

NB Where boards are fixed direct to timber joists, Gyproc Drywall Timber Screws should be used instead of nail-fixing to minimise the risk of fixing defects occurring.

NBS work section K10 - Plasterboard drylinings / partitions / ceilings; K11 - Rigid sheet flooring / sheathing / sarking / decking / linings / castings; K20 - Timber board flooring / sarking / linings / castings

Performance (▶ Refer to **section 3 - Basic principles of system design**)

BS

Table 3 - Direct fix non-combustible linings to new or existing solid timber joist floors
Solutions to satisfy the requirements of *BS 476: Part 21: 1987*

1

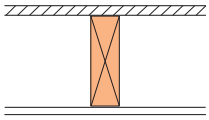

18mm t&g (softwood or chipboard) floor boarding over minimum 195mm x 38mm timber joists at 450mm centres with suitable noggings between joists to support board edges. Linings as in table.

2

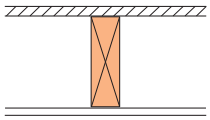

22mm t&g (softwood or chipboard) floor boarding over minimum 195mm x 38mm timber joists at 600mm centres with suitable noggings between joists to support board edges. Linings as in table.

3

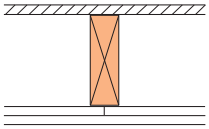

22mm t&g (softwood or chipboard) floor boarding over minimum 195mm x 47mm timber joists at 600mm centres with suitable noggings between joists to support board edges. Linings as in table.

4

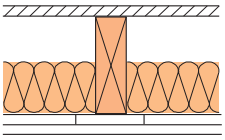

18mm t&g (softwood or chipboard) floor boarding over minimum 195mm x 50mm timber joists at 400mm centres. 30mm stone mineral wool (64kg/m³) in the cavity. Linings as in table.

5

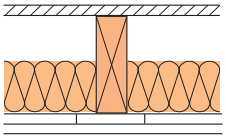

22mm t&g (softwood or chipboard) floor boarding over minimum 195mm x 50mm timber joists at 600mm centres with suitable noggings between joists to support board edges. 60mm stone mineral wool (23kg/m³) in the cavity. Linings as in table.

Detail	Nominal floor depth mm	Board type	Ceiling lining thickness mm	Noggings required	System reference
30 minutes fire resistance BS					
1	219	Glasroc F MULTIBOARD	1 x 6	Yes[2]	G104019
2	227	Glasroc F MULTIBOARD	1 x 10	Yes[2]	G106036
2	230	Glasroc F MULTIBOARD	1 x 12.5	Yes[2]	G106021
60 minutes fire resistance BS					
3	232	Glasroc F MULTIBOARD	2 x 10	Yes[2]	G106022
2	232	Glasroc F FIRECASE (screw-fixed)[1]	1 x 15	Yes[2]	G106025
4	237	80mm wide Glasroc F MULTIBOARD strip + Glasroc F MULTIBOARD	10 + 10	No	G104024
5	237	80mm wide Glasroc F MULTIBOARD strip + Glasroc F MULTIBOARD	10 + 10	Yes[2]	G106046

[1] Use 58mm Glasroc F FIRECASE Screws at 150mm centres.
[2] At ceiling perimeter and to support outer layer ceiling board joints (38mm x 38mm minimum).

NB The fire resistance and sound insulation performances are for imperforate partitions, walls and ceilings incorporating boards with all joints taped and filled, or skimmed according to British Gypsum's recommendations. The quoted performances are achieved only if British Gypsum components are used throughout, and the Company's fixing recommendations are strictly observed. Any variation in the specifications should be checked with British Gypsum.

NB Where boards are fixed direct to timber joists, Gyproc Drywall Timber Screws should be used as opposed to nail-fixing to minimise the risk of fixing defects occurring.

NBS work section K10 - Plasterboard drylinings / partitions / ceilings; K11 - Rigid sheet flooring / sheathing / sarking / decking / linings / castings; K20 - Timber board flooring / sarking / linings / castings

BS Table 4 - Compartment / separating solid timber joist and sub-joist floors
Solutions to satisfy the requirements of *BS 476: Part 21: 1987*

1

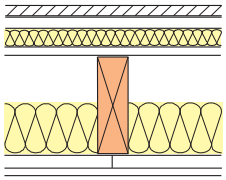

Typical platform floor construction (comprising walking surface of 18mm t&g wood board flooring, spot-bonded with Gyproc Sealant at 300mm centres to a substrate of Gyproc Plank laid on 25mm Isover Sound Deadening Floor Slab, laid on a minimum of 12mm wood-based sheet sub-deck nailed to the joists) over 195mm x 44mm timber joists at 600mm centres. 100mm Isover APR 1200 between the joists. Linings as in table.

2

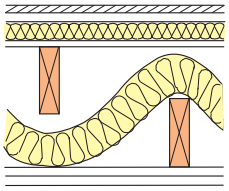

Separating sub-joist floor comprising of a platform floor construction (comprising walking surface of 18mm t&g wood board flooring, spot-bonded with Gyproc Sealant at 300mm centres to a substrate of Gyproc Plank laid on 25mm Isover Sound Deadening Floor Slab, laid on a minimum of 12mm wood-based sheet sub-deck nailed to the joists) over minimum 47mm wide timber floor joists at 600mm centres. 100mm Isover APR 1200 in the cavity. Independent minimum 47mm wide ceiling joists. Linings as in table.

3

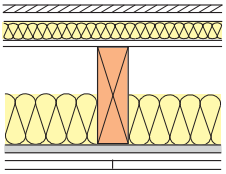

Typical platform floor construction (comprising walking surface of 18mm t&g wood board flooring, spot-bonded with Gyproc Sealant at 300mm centres to a substrate of Gyproc Plank laid on 25mm Isover Sound Deadening Floor Slab, laid on a minimum of 12mm wood-based sheet sub-deck nailed to the joists) over minimum 195mm x 38mm timber joists at 600mm centres. Gypframe RB1 Resilient Bars fixed to underside of joists at 450mm centres and at perimeter with ceiling. Linings as in table fixed into the bars only. 100mm Isover Spacesaver Ready-Cut in the cavity.

Detail	Nominal floor depth mm	Board type	Ceiling lining thickness mm	Maximum loadbearing ratio	Sound insulation R_w (R_w+ Ctr) Airborne dB	L_{nw} Impact dB	System reference
60 minutes fire resistance BS							
1	301	Plank (inner layer) + SoundBloc (outer layer)	19 + 12.5	100%	62 (50)	56	C016038
3	315	SoundBloc	2 x 15	100%	64 (53)	54	C016040
2	320	SoundBloc	2 x 15	100%	66 (55)	48	C106050

	Approved Document E requirement D_{nTw} + Ctr dB	L_{nTw} dB	Minimum solution[1] (R_w + Ctr) dB	L_{nw} dB	Recommended solution[1] (R_w + Ctr) dB	L_{nw} dB
Conversions	43	64	(47)	56	(52)	52
New-build	45	62	(49)	54	(54)	50

[1] Minimum solutions provide little or no margin of safety to allow for reductions in performance due to flanking transmissions. Recommended solutions have greater potential to satisfy the requirements of Building Regulations Approved Document E.

NB Separating floors require both a suitable isolating floor and a suitable isolating ceiling.

NB The fire resistance and sound insulation performances are for imperforate partitions, walls and ceilings incorporating boards with all joints taped and filled, or skimmed according to British Gypsum's recommendations. The quoted performances are achieved only if British Gypsum components are used throughout, and the Company's fixing recommendations are strictly observed. Any variation in the specifications should be checked with British Gypsum.

NB Where boards are fixed direct to timber joists, Gyproc Drywall Timber Screws should be used instead of nail-fixing to minimise the risk of fixing defects occurring.

Performance (▶ Refer to **section 3 - Basic principles of system design**)

EN

Table 5a – Direct fix to joists / bottom chord of trusses below the roof space
Solutions to satisfy the requirements of *BS EN 1364-2: 1999*

1

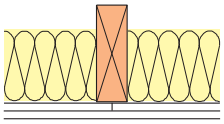

150mm x 38mm (minimum) joists / chords at 600mm (maximum) centres. Insulation and ceiling linings as in table.

Detail	Board type	Ceiling lining thickness mm	Noggings required	Insulation type	System reference
30 minutes fire resistance EN					
1	WallBoard	2 x 15	Yes[1]	150mm Isover Spacesaver Ready-Cut	C106052
1	FireLine	2 x 12.5	Yes[1]	150mm stone mineral wool (24kg/m³)	C106048

[1] At ceiling perimeter and to support outer layer ceiling board joints.

NB The fire resistance and sound insulation performances are for imperforate partitions, walls and ceilings incorporating boards with all joints taped and filled, or skimmed according to British Gypsum's recommendations. The quoted performances are achieved only if British Gypsum components are used throughout, and the Company's fixing recommendations are strictly observed. Any variation in the specifications should be checked with British Gypsum.

NB Where boards are fixed direct to timber joists, Gyproc Drywall Timber Screws should be used instead of nail-fixing to minimise the risk of fixing defects occurring.

NBS work section K10 - Plasterboard drylinings / partitions / ceilings; K11 - Rigid sheet flooring / sheathing / sarking / decking / linings / castings; K20 - Timber board flooring / sarking / linings / castings

BS Table 5b - Direct fix to joists / bottom chord[4] of trusses below the roof space
Solutions to satisfy the requirements of *BS 476: Part 22: 1987*

1
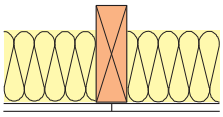

2
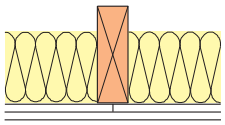

3
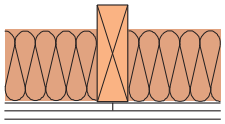

38mm (minimum) timber joists or 35mm (minimum)[1] bottom chord of trusses at 600mm centres, with suitable timber noggings between joists to support board edges. Insulation laid between joists (see table). Linings as in table.

4
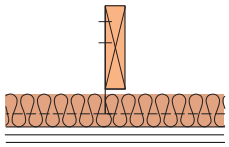

CasoLine MF suspended from joists. Insulation laid over ceiling grid. Linings as in table.

Detail	Board type	Ceiling lining thickness mm	Noggings required	Insulation type	System reference
30 minutes fire resistance BS					
1	Glasroc F MULTIBOARD	1 x 12.5	Yes[2]	150mm Isover Spacesaver Ready-Cut	G106041
2	WallBoard	2 x 12.5	Yes[2]	150mm Isover Spacesaver Ready-Cut	C106049
1	FireLine	1 x 12.5	Yes[2]	150mm Isover Spacesaver Ready-Cut	C106047
4	WallBoard	2 x 12.5	No	100mm Isover Spacesaver Ready-Cut	C106045
60 minutes fire resistance BS					
2	Glasroc F MULTIBOARD	2 x 10	Yes[2]	150mm Isover Spacesaver Ready-Cut	G106042
3	FireLine	2 x 12.5	Yes[2]	150mm stone mineral wool (24kg/m³)	C106048
4	FireLine	2 x 15	No	30mm stone mineral wool (45kg/m³)	C106051

[1] Nominal 50mm x 25mm timber battens should be fixed to the side of timber supports where the ceiling boards butt to maintain an adequate bearing surface. See **Construction details – 7.**
[2] At ceiling perimeter and to support outer layer ceiling board joints.

NB The fire resistance and sound insulation performances are for imperforate partitions, walls and ceilings incorporating boards with all joints taped and filled, or skimmed according to British Gypsum's recommendations. The quoted performances are achieved only if British Gypsum components are used throughout, and the Company's fixing recommendations are strictly observed. Any variation in the specifications should be checked with British Gypsum.

NB Where boards are fixed direct to timber joists, Gyproc Drywall Timber Screws should be used instead of nail-fixing to minimise the risk of fixing defects occurring.

Performance (▶ Refer to **section 3 - Basic principles of system design**)

Table 6 - U-values for 'room-in-the-roof' constructions in new-build and refurbishment

1

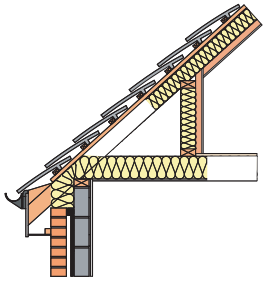

New-build 'room-in-the-roof'
Tiled or slated roof, tiling battens, breather membrane on softwood rafters at 600mm centres. Insulation installed between rafters (see table). Gyproc ThermaLine laminate fixed to the underside of rafters as in table.

2

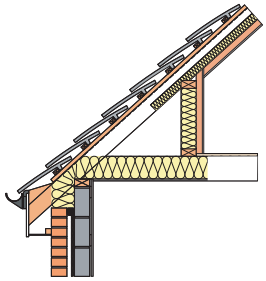

Refurbishment 'room-in-the-roof'
Tiled or slated roof, tiling battens, sarking felt on softwood rafters at 600mm centres. Insulation installed between rafters (see table) maintaining a 50mm ventilated air space above the insulation. Gyproc ThermaLine laminate fixed to the underside of rafters as in table.

Detail	Insulation type	Thermal laminate type	Thermal laminate thickness mm	U-value W/m²K
1	90mm Isover Frame Batt 32	ThermaLine SUPER	70	0.23
1	100mm Isover Frame Batt 35	ThermaLine SUPER	70	0.19
2	140mm Isover Frame Batt 32	ThermaLine SUPER	70	0.16
2	200mm (2 x 100mm) Isover Frame Batt 35	ThermaLine SUPER	70	0.13

NBS work section K10 - Plasterboard drylinings / partitions / ceilings; K11 - Rigid sheet flooring / sheathing / sarking / decking / linings / castings; K20 - Timber board flooring / sarking / linings / castings

Design

Planning - key factors
To minimise the risk of ceiling finish defects occurring, seasoned timber with a moisture content not exceeding that recommended in *BS 5268: Part 2* should be used. The contractor should ensure that timber supports are accurately spaced, aligned, and levelled. Gyproc Drywall Timber Screws are the preferred method of fixing.

Cavity fire barriers
Cavity barriers may be required to satisfy the requirements of Building Regulations.
▶ Refer to **section 10 – Cavity fire barriers.**

Strength and robustness
Timber should be aligned and level, and should meet the requirements of *BS 5268: Part 2*. The dimensions and assembly of timber supports should be sufficient to allow positive fixing of plasterboard without bounce or undue deflection because of screwing or other applied force. When the above fixing conditions cannot be met, a timber batten should be securely fixed to the side of the timber supports where ceiling boards butt, in order to increase the bearing surface.

Where boards are fixed at maximum centres in adverse conditions, the standard of lining can be affected. Adverse conditions can generally be described as conditions where high humidity occurs, principally in the cold, damp, autumn / winter period. They also refer to buildings under construction over this period, where both the structure and wet applications such as plastering and screeding are subject to slow drying conditions. In these adverse conditions there is a risk of the plasterboard bowing and therefore additional plasterboard support framing should be incorporated.

Where a vapour control layer is included in the ceiling construction in conditions described previously, condensation can form on the vapour control surface. This can result in plasterboard becoming unduly damp, and affecting the standard of acceptability of the lining and any applied plaster or textured coating. In these circumstances increased ventilation or dehumidification is recommended.

Water vapour control
Where there is a requirement for a vapour control layer, DUPLEX grade Gyproc plasterboards should be specified as the face layer, i.e. the second layer in double layer linings. The application of two coats of Gyproc Drywall Sealer to the face lining will also provide vapour control. Refer also to **Timber noggings,** later.

Acoustic performance
Airtightness is essential for optimum sound insulation. While most junctions will be sealed with standard finishing materials, gaps at the perimeter of the floor and ceiling, and other small air paths, can be sealed using Gyproc Sealant. The performance of the floor in practice will generally be governed by flanking transmission.
▶ Refer to **section 3.2 – Acoustic performance.**

Imposed loads
The designer should ensure that the floor construction is suitable to support any imposed loads.

Timber noggings within timber floors (direct fix applications)
Suitable timber noggings, typically 38mm x 38mm or 50mm x 50mm, may be required between joists and at the ceiling perimeter to support the edges / ends of the board. The provision of noggings depends on several factors; the thickness of board, spacing of timber joists and any technical performance requirements, e.g. vapour resistance and fire resistance performance. **Table 7** overleaf provides information on the general requirement of noggings. However, reference must also be made to the relevant technical performance tables (**Tables 1 - 6**) on the previous pages to establish the need for noggings in fire-rated situations. Furthermore, timber noggings should always be incorporated when fixing boards offering a vapour control layer, irrespective of joist spacing, e.g. DUPLEX grade Gyproc plasterboard and thermal laminates providing vapour control. Timber noggings are always required around the ceiling perimeter, except when using 15mm Gyproc WallBoard and 19mm Gyproc Plank in non fire-rated situations. In multi-layer plasterboard ceilings, the provision for noggings relates to the outer layer board only (unless otherwise stated).

Joist width
Where joist width is less than the minimum stated in **Tables 1 - 6**, the system may not meet its specified performance.

Where minimum fixing tolerances cannot be met, e.g. the inadequate bearing surface afforded by 35mm width trussed rafters, 50mm x 25mm timber battens should be screw-fixed to the side of the joists where ceiling boards abut in order to extend the bearing surface. See **Construction details – 7**.

Nail popping
Loosening of nails in timber can occur through timber shrinkage, or as a result of fixing boards to misaligned or twisted framing. To reduce the risks, boards should be fixed tight to framing members using Gyproc Drywall Timber Screws. Alternatively, fix Gypframe RB1 Resilient Bar or Gypframe RB2 SureFix Bar to the underside of timber joists to provide a positive ground for screw-fixing the ceiling linings. In tests where joists warped and twisted under drying shrinkage, Gypframe RB1 Resilient Bar and Gypframe RB2 SureFix Bar were successful in providing a sound base for plasterboard fixing, resulting in no fixing defects. Gypframe RB1 Resilient Bar and Gypframe RB2 SureFix Bar also contribute to the sound insulation of a timber joist floor.

Fixing to super-dried timber and engineered timber 'I' beams
Test results show that Gyproc Drywall Timber Screws are the preferred solution for fixing to standard softwood, super-dried timber (approximately 12% moisture content) and engineered timber 'I' beams. When engineered timber 'I' beams or timber joists are used in conjunction with a metal framed partition such as **GypWall RAPID dB Plus**, the contractor may wish to use Gyproc Drywall Screws for both applications (similar lengths are available).

▶ Please refer to **section 3 - Basic principles of system design** for general guidance

Services
The installation of electrical services should be carried out in accordance with *BS 7671*. Electrical and other small service runs can be routed within the floor cavity. Concealed cables may need earthed metallic covering, or to be enclosed in earthed conduit, trunking, or ducting to satisfy *BS 7671*.

Fixtures
Fixtures should be made into joists, or to supplementary timber. Care must be taken not to bridge Gypframe RB1 Resilient Bar or Gypframe RB2 SureFix Bar.

Board finishing
▶ Refer to **section 13 – Finishing systems and decorative effects.**

For more information, visit www.timber-frame.org

For more information refer to the British Gypsum **SITE** BOOK, available to download from www.british-gypsum.com

Table 7 - Provision of timber noggings within timber floors[1]

Board thickness	Maximum joist centres with noggings mm	Maximum joist centres without noggings mm
6mm Glasroc F MULTIBOARD	450	400
10mm Glasroc F MULTIBOARD	600	450
12.5mm Gyproc plasterboard / Glasroc F MULTIBOARD	600	450
15mm & 19mm Gyproc plasterboard	600	600
Gyproc ThermaLine laminates	600	450

[1] To be read in conjuction with **Timber noggings within timber floors**.

▶ Please refer to **section 3 - Basic principles of system design** for general guidance

Construction details

1 Reflected ceiling plan - single layer. 12.5mm plasterboard with joists at maximum 450mm centres (or 15mm plasterboard with joists at maximum 600mm centres)

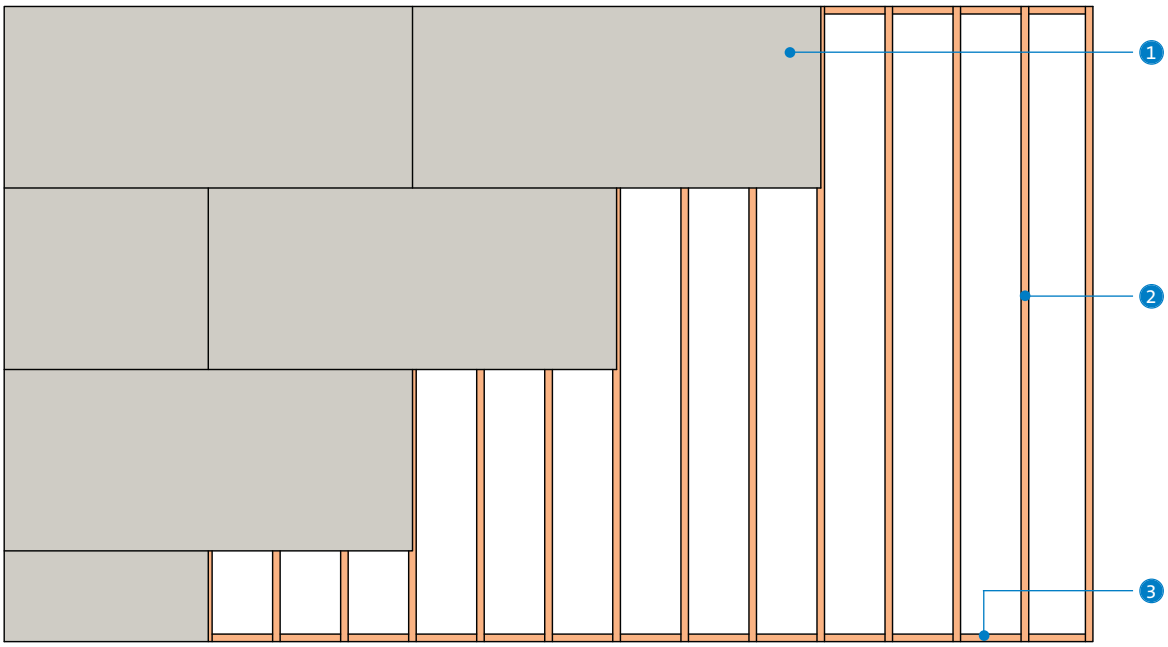

2 Reflected ceiling plan - single layer. 12.5mm plasterboard with joists at maximum 600mm centres

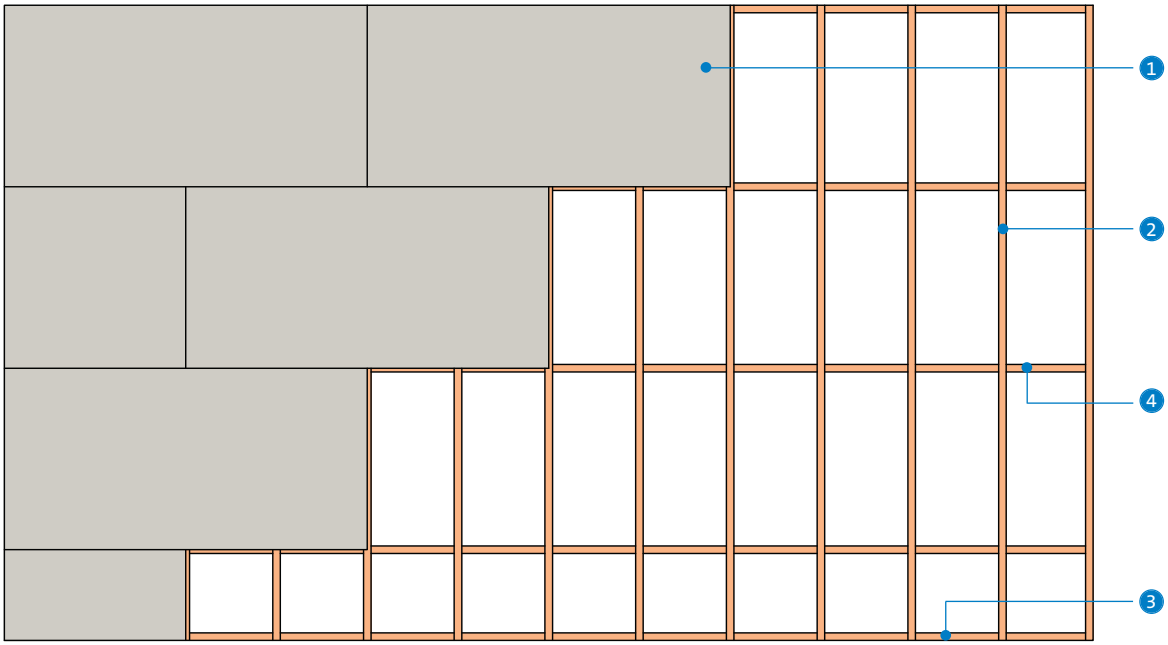

1. Gyproc plasterboard
2. Timber joist
3. Timber noggings to provide support at the perimeter
4. Timber noggings to support board edges

3 Reflected ceiling plan - double layer. 12.5mm plasterboard with joists at maximum 450mm centres (noggings may be required to support long edges of board of outer layer if fire-rated)

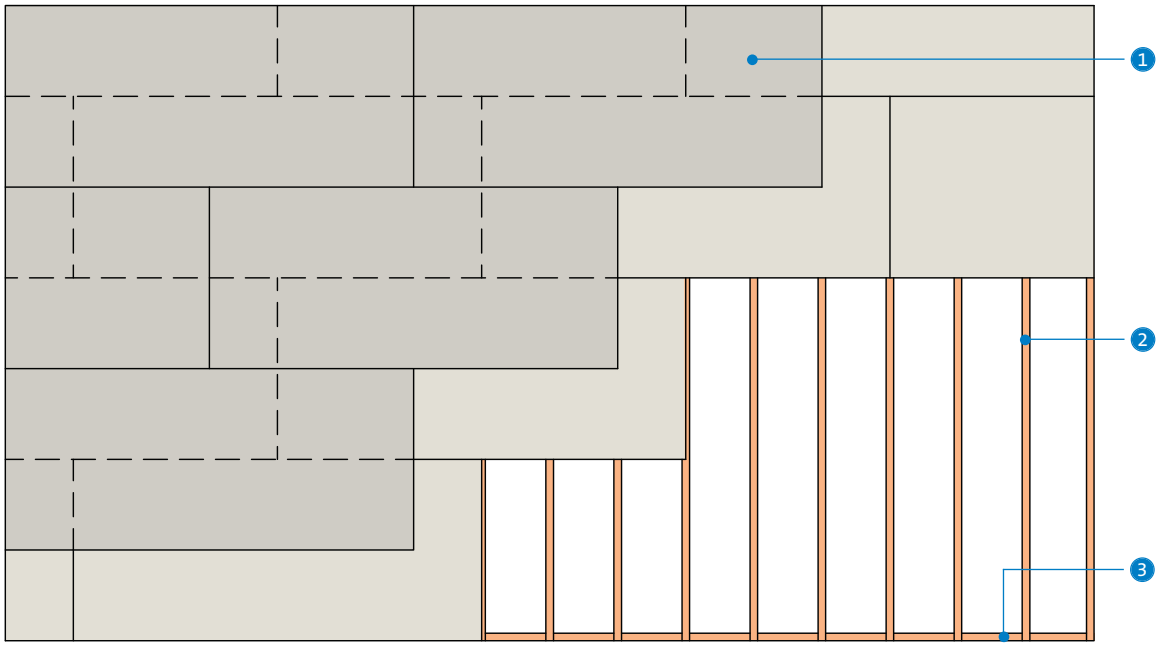

4 Reflected ceiling plan - single layer. 12.5mm Gyproc HandiBoard with joists at maximum 610mm centres

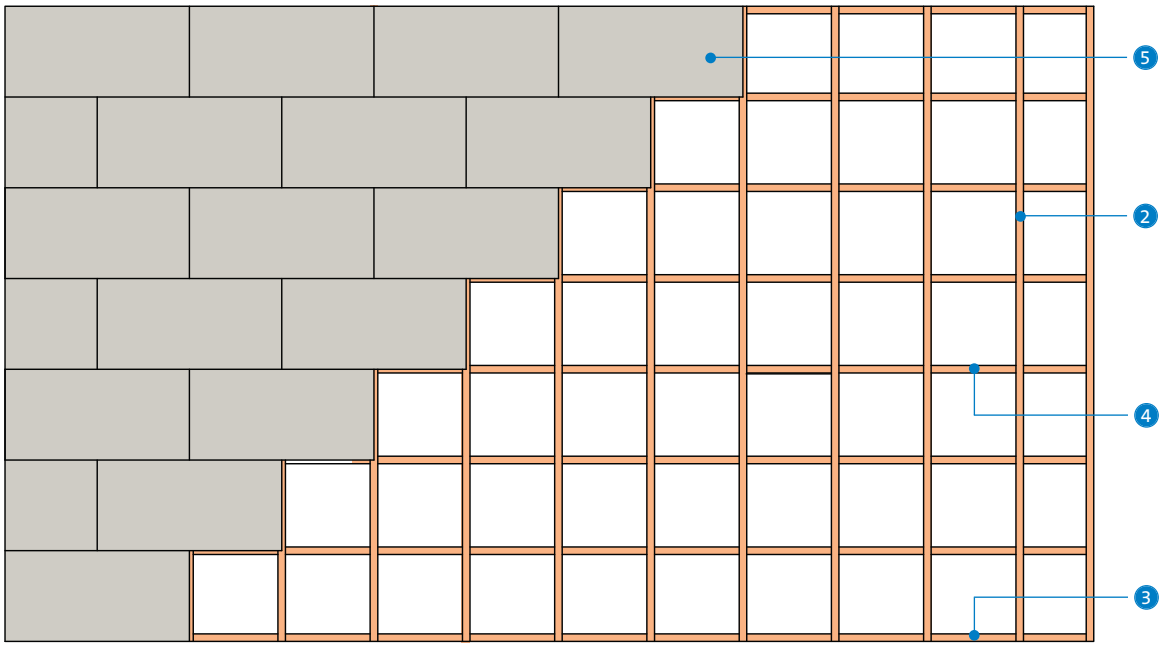

NB Noggings not required when joists at 406mm centres.

1. Gyproc plasterboard
2. Timber joist
3. Noggings to provide support at the perimeter
4. Noggings to support board edges
5. Gyproc HandiBoard

Construction details

5 Reflected ceiling plan - single layer. 12.5mm plasterboard with Gypframe RB2 SureFix Bars at maximum 450mm centres

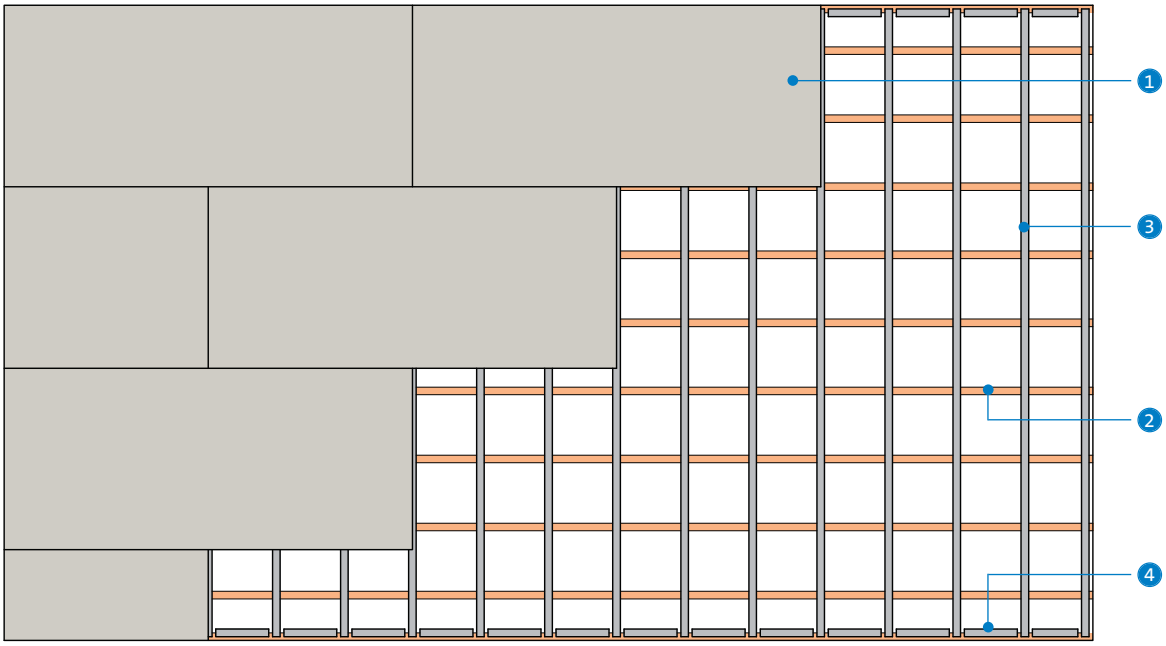

6 Partition head fixing to ceiling with Gypframe RB2 SureFix Bar

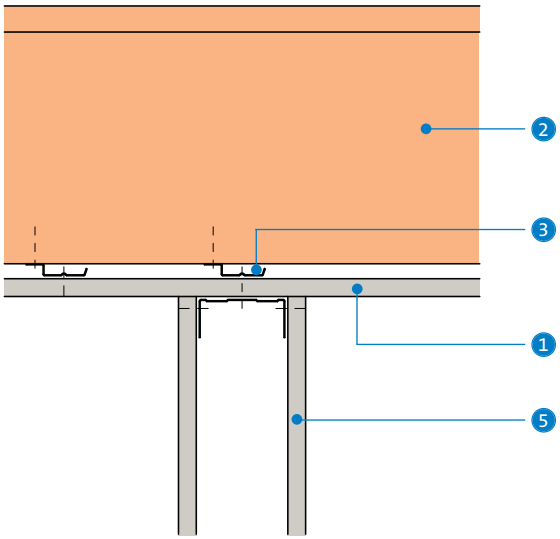

7 Increasing bearing surface of timber rafters and joists

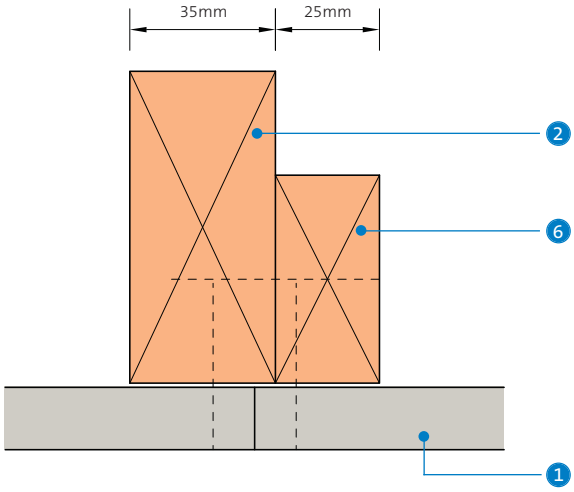

1. Gyproc plasterboard
2. Timber joist
3. Gypframe RB2 SureFix Bar
4. Gypframe RB2 SureFix Bar noggings at perimeter
5. **GypWall CLASSIC**
6. Timber batten (50 x 25mm)

Plaster skimming

This section includes updated information, added since it was first published in July 2009. Please see the WHITE BOOK update document for details.
Last updated 05/07/2010

Manchester Joint Hospitals

Plaster skimming

Plaster skimming to plasterboards is a popular method of providing a smooth, seamless surface ready to receive decorative treatment. Skim plastering gives many of the advantages of a traditional solid plaster finish combined with quick turnaround on site. Surface preparation simply involves joint reinforcement and, if tapered edge board is used, flushing-out the tapers. The plaster is applied to the wall or ceiling surface to a nominal 2mm thickness.

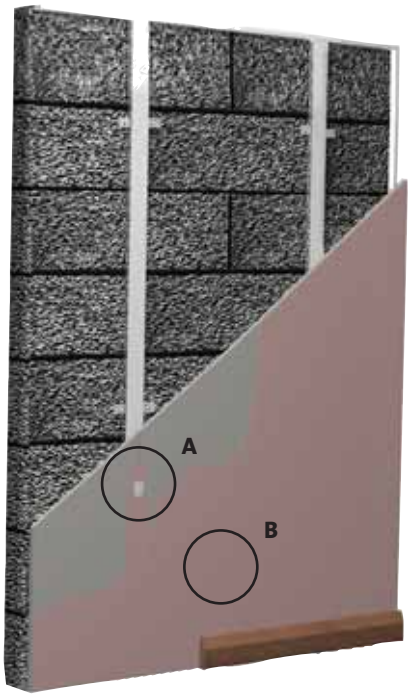

A Gyproc Joint Tape

B Thistle finish plaster

Key facts

- Traditional plaster finish
- Provides uniform surface
- Resilient and scuff-resistant for general purposes, and excellent resistance to accidental damage provided by Thistle Durafinish
- Applied to 2mm thickness
- Finished in one visit to site
- ConstructionSkills grant approved training available

Applications

Due to the design flexibility of plaster skimming systems, they can be tailored to meet the requirements of a wide range of applications.

Sector

- ✓ Office / commercial
- ✓ Education
- ✓ Custodial
- ✓ High-rise multi-occupancy
- ✓ Retail
- ✓ Healthcare
- ✓ Housing
- ✓ Auditoria
- ✓ Sport and leisure
- ✓ Industrial
- ✓ Apartment buildings

System components

Plaster products

Thistle Board Finish
For low-medium suction backgrounds, e.g. plasterboards, Thistle Dri-Coat.

Thistle Multi-Finish
For use over both undercoats and plasterboard.

Thistle Durafinish
To provide improved resistance to accidental damage.

Plaster beads and accessories

Thistle Thin Coat Angle Bead — **Length** 2400, 3000mm

Thistle Thin Coat Mini Mesh Bead — **Length** 2400, 3000mm

Thistle Thin Coat Plaster Stop Bead — **Length** 2400, 3000mm
3mm thickness.

Thistle ProTape FT50 and FT100
Self-adhesive glass fibre mesh tapes for joint reinforcement.

Gyproc Joint Tape
Paper tape with centre crease for joint reinforcement, providing superior resistance to cracking.

ThistleBond-it
For pre-treatment of moisture resistant board surfaces.

Always use genuine branded British Gypsum components to qualify for **SpecSure®** lifetime warranty

Application and finishing overview

Mixing
Thistle plasters should be mixed by adding to clean water using clean mixing equipment. Contamination from previous mixes can adversely affect the setting time and strength. Fresh contamination has more effect than old, so equipment should be washed immediately after mixing rather than just before.

Thistle finishing plasters are suitable for mixing by hand or mechanical whisk of a slow speed, high torque type. While mechanical mixing speeds the process up, there is no need to continue mixing after dispersing lumps and achieving the right consistency. Over-mixing wastes time and energy, can affect setting times, lead to deterioration in workability and create difficulty in achieving a flat finish.

Plastering to board backgrounds
Board finishing should be completed as soon as possible after the boards have been fixed. Thistle plaster is applied with firm pressure, built out to the required thickness in two applications and trowelled to a smooth matt finish. Good site practice should be followed, as outlined in *BS EN 13914 - 2: Design Considerations and Essential Principles for Internal Plastering*.

Thistle Thin Coat Angle Bead or Thistle Thin Coat Mini Mesh Bead is fixed to the plasterboard angle by embedding in 'dabs' of finish plaster. To hold the bead in correct alignment as the plaster sets, it is recommended that additional mechanical fixings are used (non-rusting nails, screws or staples) as required. Wipe away any excess before the plaster sets, as scraping set plaster may damage the zinc coating. If the bead is fixed to the board 'dry' the adhesion may be reduced because it is difficult to squeeze plaster between the bead and the plasterboard.

Before applying Thistle finish plasters to Gyproc plasterboards, Glasroc F MULTIBOARD, Glasroc F FIRECASE or Rigidur H, flat joints should be reinforced using Thistle ProTape FT50 or FT100, or any gaps exceeding 3mm pre-filled and reinforced using Gyproc Joint Tape. Thistle ProTape FT50 and FT100 fibre tapes are self-adhesive and fixed to the board surface before the first application of plaster. Gyproc Joint Tape is embedded in the first coat over each joint, leaving sufficient plaster under the tape to ensure good adhesion, and immediately covered with a further application.

Plaster is applied to the whole surface after the joint treatment has partially stiffened, but not set.

For joints that may be subject to more movement (including those around door or window apertures, where board edges are not fully supported, or on ceilings below floors that are susceptible to high deflection), Gyproc Joint Tape embedded in the finish provides better resistance to cracking than glass fibre tapes.

Decoration
Gypsum based plasterwork must always be thoroughly dry before decorating, although a coat of permeable paint can be applied in the interim. Plaster surfaces can be decorated with most proprietary paint finishes and will accept the majority of wall covering adhesives. Follow manufacturers' recommendations in respect of applied decorative treatments.

Specialist training
The British Gypsum Drywall Academy offers comprehensive ConstructionSkills grant approved off-site training at dedicated training centres throughout the UK. For more information, visit www.british-gypsum.com

Performance

Fire protection
Thistle finish plasters achieve a Euroclass A1 reaction to fire rating, except Thistle Durafinish, which is A2, s1 - d0.

Sound insulation
The application of Thistle finish plasters can help the plasterboard element to achieve optimum acoustic performance, since any small gaps or other air paths will be sealed during plastering.

Table 1 – Physical properties

Thistle plaster type	Bag weight kg	Approx. coverage[1] m² per 1000kg	Approx. coverage[1] m² per bag	Approx. setting time hours
Board Finish	25	410 - 430	10	1.5
Multi-Finish	25	410 - 430	10	1.5
Durafinish	25	410 - 430	10	1.5

[1] Coverage based on 2mm thickness.

For full installation details, refer to the British Gypsum **SITE BOOK**, available to download from www.british-gypsum.com

For full installation details, refer to the British Gypsum **SITE BOOK**, available to download from www.british-gypsum.com

Durability

Thistle finish plasters attain high strength during the drying process and do not suffer from inherent shrinkage cracks. For the highest quality ceiling finish, Thistle Bonding Coat can be applied to the board surface as the base coat at up to 8mm thickness followed by a 2mm application of Thistle Multi-Finish.

▶ Refer to **section 11 - Plaster systems.**

Physical properties

Coverage, setting times and bag weights are given in **Table 1**.

Damage resistance

Thistle Durafinish provides additional resistance to accidental damage, glancing impacts and repeated abrasion, which can cause scratching, gouging or chipping of other wall finishes. Using Thistle Durafinish reduces the extent and frequency of repair work, and minimises associated costs and disruption. It also has excellent adhesion to most backgrounds, therefore damage to small areas does not spread or cause debonding, which makes repair easier.

Table 2 – Performance : comparison between Thistle Multi-Finish and Thistle Durafinish

Property tested	Test method	Real examples	Image	Damage measured	Performance		Improvement %
					Thistle Durafinish	Thistle Multi-Finish	
Glancing impact resistance	150 kg trolley, 30° angle, 1 m/s speed, simulating impact energy of 75J	Corners of furniture, trolleys and wheeled equipment, general light impacts	1	Depth of indentation	0.68mm	2.60mm	74%
Scratch resistance, diamond stylus	Taber Shear / scratch tester, standard	Light contact with sharp objects	2	Weight loss	0.004g	0.07g	94%
Scratch resistance	Taber Shear / scratch tester, modified to use key, 180g load	Light contact with sharp objects	3	Visual assessment	No damage	Visible scratch	N/A
	Taber Shear / scratch tester, modified to use key, 3.4kg load	Medium-heavy contact with sharp objects	3	Weight loss	0.003g	0.0195g	85%
Scratch resistance	Elcometer	Medium contact with sharp objects	4	Weight loss	0.08g	0.2g	60%
Abrasion resistance	Taber Abraser	Rubbing of chair backs	5	Weight loss	0.27g	0.3g	10%
Surface hardness average	*BS EN 13279-1* - ball indentation	Heavy objects leaning on wall	6	N/A	15N/mm²	15N/mm²	0%
Compressive strength	*BS EN 13279-1* - prism crush	None	7	N/A	12N/mm²	10N/mm²	20%
Flexural strength	*BS EN 13279-1* - prism 3-point bend	None	8	N/A	5.0N/mm²	3.5N/mm²	43%

1
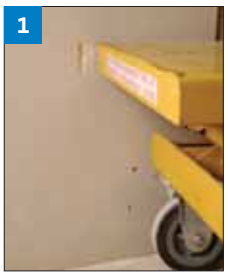

2
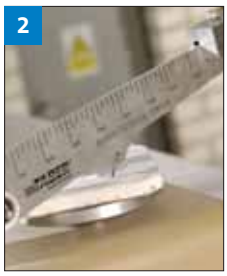

3

4

5

6

7

8

Design

Planning - key factors
Thistle Board Finish is designed to provide a 2mm skim finish to plasterboards, Glasroc F MULTIBOARD and Glasroc F FIRECASE. Thistle Multi-Finish offers an alternative that is also capable of finishing undercoat plasters. Where increased resistance to accidental damage is required, or where finishing Rigidur H, Thistle Durafinish is recommended. For the highest quality ceiling finish, Thistle Bonding Coat (up to 8mm) plus Thistle Multi-Finish (2mm) can be specified.

Care must be taken when applying finish coats in low temperatures and an allowance made for slightly longer setting and drying times. Plasters should not be applied where backgrounds are frozen or at risk of freezing before the plaster work is thoroughly dry.

Thistle Durafinish has similar working characteristics, setting time and suction resistance to Thistle Multi-Finish. The full thickness of 2mm must be applied for the optimum performance to be achieved. Ambient and background temperatures must be maintained above 5°C until fully dry.

Backgrounds

Plasterboards (excluding moisture resistant grade boards)
Skimming should be specified only on the **face** of boards, i.e. the side without a paper overlap. This will be the ivory face in the case of Gyproc WallBoard, Gyproc WallBoard TEN, Gyproc DuraLine and Gyproc HandiBoard, the coloured face of Gyproc FireLine, Gyproc SoundBloc and Gyproc Ergo900. Joints must be reinforced with Thistle ProTape FT50 or FT100, or Gyproc Joint Tape. A range of corner and stop beads is available for reinforcement of external angles and edges.

Moisture resistant grade boards
Skim plastering is not normally specified to Gyproc Moisture Resistant and MR grade boards. These types of board are intended for use in environments of higher than normal humidity for which no gypsum plaster is designed to be suitable. Where moisture resistant board options are used in shell and core construction to provide temporary resistance to high moisture conditions, they can be skimmed at a later date after the building envelope has been made weather-tight. Plaster should be applied only to the face of moisture resistant boards. Pre-treatment with ThistleBond-it is required when using Thistle Board Finish or Thistle Multi-Finish. Pre-treatment is not necessary if using Thistle Durafinish.

Glasroc F MULTIBOARD, Glasroc F FIRECASE and Rigidur H
Skim finishing should be to the smooth face of the board. Rigidur H may need to be treated with Thistle GypPrime prior to skimming, to control the suction. Application techniques and joint reinforcement are similar to those used on plasterboards - see **Application and finishing overview - Plastering to board backgrounds**.

Tiling
Tiles up to a weight of 20kg/m² can be applied directly to the Thistle finish coats, except where the system includes a bonding agent. As the total weight of tiles and plaster applied over a bonding agent is limited to 20kg/m², consideration should be given to tiling directly to the background. If plastering to provide a background for tiles, avoid polishing the surface. Polished plaster surfaces should be roughened and a suitable primer used.

Tiles should not be applied directly to Thistle undercoats, with the exception of Thistle Dri-Coat.

▶ Please refer to **section 3 - Basic principles of system design** for general guidance

Jointing

This section includes updated information, added since it was first published in July 2009. Please see the WHITE BOOK update document for details.
Last updated 05/07/2010

Cadbury offices,
Bournville, Birmingham

Jointing

Gyproc jointing materials produce durable joint reinforcement and a smooth, continuous, crack-resistant surface ready for priming and final decoration. They also seal the lining, a prerequisite if the building element is to achieve specified levels of fire resistance and sound insulation. The materials can be applied either manually using hand tools, or mechanically, using SpeedTape tools.
A number of jointing specifications are available to suit the board type, method of application, and site preference. The jointing process normally involves three application stages; bedding the tape and bulk filling the joint, secondary filling to take up shrinkage, and finishing. After drying, the complete surface is treated with Gyproc Drywall Primer or Gyproc Drywall Sealer.

A Gyproc Joint Tape

B Gyproc jointing compounds

Key facts

- Produces a seamless surface ready for decoration
- Choice of jointing materials to suit user preference
- Mechanically applied materials ideal for larger areas
- Ready-mixed or dry powder options
- ConstructionSkills grant approved training available

Applications

Due to the design flexibility of British Gypsum systems, they can be tailored to meet the requirements of a wide range of applications.

Sector

- ✓ Office / commercial
- ✓ Education
- ✓ Custodial
- ✓ High-rise multi-occupancy
- ✓ Retail
- ✓ Healthcare
- ✓ Housing
- ✓ Auditoria
- ✓ Sport and leisure
- ✓ Industrial
- ✓ Apartment buildings

System components

Fixing and finishing products

Gyproc Joint Filler
Gypsum-based setting material for bulk and secondary filling of plasterboard joints, and fixing of external corner reinforcements.

Gyproc Joint Cement
Air-drying powdered jointing material for both hand and mechanical jointing applications.

Gyproc Easi-Fill
Combined setting and air-drying gypsum-based material for both bulk filling and finishing of joints.

Gyproc Easi-Fill 45
Gypsum-based material for both bulk filling and finishing of joints - 45 minutes working time.

Gyproc ProMix LITE
Lightweight ready-mixed jointing material for both hand and mechanical jointing applications.

Gyproc Ready Mix Joint Cement
Air-drying ready-mixed jointing material for both hand and mechanical jointing applications.

▶ Refer to **Table 2** for guidance on Gyproc jointing compounds.

Gyproc Joint Tape
Paper tape for flat and internal angle joints.
Incorporates a centre crease, chamfered edges and spark perforations.
150m roll

Gyproc Corner Tape
Paper tape with two metal strips, for reinforcing external angle joints.
33m roll

Thistle tapes
ProTape FT50 and FT100, for reinforcing plasterboard joints and angles.

Gyproc No-Coat Ultraflex 325
Impact-resistant joint reinforcement, with a hinged co-polymer core to fit any internal or external angle joint.
30m roll

Gyproc No-Coat Ultratrim L
Impact-resistant reinforcement for neat finishing of board edges.
3050mm lengths

Fixing and finishing products (continued)

Gyproc Drywall Metal Angle Bead
Perforated galvanised angle bead for reinforcing external 90° angles.
2400 and 3000mm lengths

Gyproc Drywall Archbead
Extruded uPVC profile, for reinforcing curved arches and reveals.
3000mm lengths

Gyproc Drywall Metal Edge Bead
Galvanised steel channel for reinforcing board edges.
12.5mm width – 2400 and 3000mm lengths
15mm width – 3000mm lengths

Gyproc Drywall Plastic Edge Bead
Extruded uPVC channel for reinforcing board edges.
12.5mm width – 3000mm lengths

Gyproc Drywall Primer
Plasterboard primer, to prepare surface for painting.

Gyproc Drywall Sealer
Plasterboard sealer, used in two coats to provide vapour control, or in one coat to protect the board from steam-stripping of wallcoverings.

▶ Refer to **Table 1** for guidance on Gyproc primers.

Gyproc Tools
Hand tools and SpeedTape mechanical jointing tools and equipment.
For further information refer to www.artexltd.com

For further details on system components:
▶ Refer to **section 14 - Products, Plasterboard accessories.**
▶ Refer to **section 14 - Products, Decorative products.**

Always use genuine branded British Gypsum components to qualify for **SpecSure®** lifetime warranty

Installation overview

Preparation - general
Board finishing should be completed as soon as possible after the boards have been fixed. Board surfaces should be reasonably dry, clean and protected from the weather. Boards should be securely fixed with no steps between adjacent boards. The correct fixings must be used and properly located with their heads just below the liner surface. Any protruding screw heads should be driven home with a hand screwdriver prior to jointing. Gaps between boards greater than 3mm should be pre-filled using Gyproc Joint Filler, Gyproc Easi-Fill or Gyproc Easi-Fill 45.

Hand jointing - Gyproc plasterboards
Gyproc Joint Tape is bedded into the appropriate Gyproc jointing compound. See **Table 3**.

If Thistle ProTape FT50 is used, bedding is not required, but the filling material should be pressed through the holes in the tape, particularly if there is a gap between board joints. This is important to achieve a satisfactory appearance to the finished joint.

Two or three applications of jointing compound are trowel applied, each feathered out beyond the previous application. An equal number of applications are made to spot screw heads. The joint treatment is sanded as necessary to achieve a smooth surface. At internal angles, Gyproc Joint Tape is creased to the angle to provide reinforcement and bedded using a Gyproc Taping Knife. At external angles, Gyproc Corner Tape is used. Where additional protection is required, Gyproc Drywall Metal Angle Bead or Gyproc No-Coat Ultraflex 325 is applied. Gyproc Drywall Edge Bead or Gyproc No-Coat Ultratrim L is used to protect cut ends of boards, e.g. at reveals. Corner and edge reinforcements should be fixed using a setting jointing compound. See **Table 3**. After drying, Gyproc Drywall Primer or Gyproc Drywall Sealer is applied to the entire board surface and jointed areas, to prepare the lining for final decorative treatment.

Mechanical jointing - Gyproc plasterboards
SpeedTape mechanical jointing tools can be used as an alternative to hand jointing, to provide a fast, consistent finish using 175mm, 250mm and 300mm finishing boxes as appropriate. A full range of tools and ConstructionSkills grant approved training is available from British Gypsum. For more information, visit www.british-gypsum.com

Jointing - Glasroc F MULTIBOARD and Glasroc F FIRECASE
Gyproc Joint Cement is trowel applied to the joint and Gyproc Joint Tape bedded in. Alternatively, Thistle ProTape FT50 is applied over the joint and a coat of Gyproc Joint Cement is trowel applied. The joint treatment is allowed to dry and lightly sanded to remove any high spots.

For internal angles the use of Gyproc Joint Tape is preferable to Thistle ProTape FT50. Its crease makes a neat, straight joint easier to achieve and the cracking resistance is higher. For external angles, Gyproc Corner Tape, Gyproc No-Coat Ultraflex 325 or Gyproc Drywall Metal Angle Bead are used, bedded in Gyproc Joint Cement. For board thicknesses of over 20mm, Gyproc No-Coat Ultraflex 325 is recommended. A second coat of Gyproc Joint Cement is trowel applied and feathered out to about 200mm width on each side on the joint. The joint treatment is allowed to dry and lightly sanded. A third application of Gyproc Joint Cement may be necessary, applied as the second but slightly wider, e.g. where boards are fixed with any steps, gaps or minor damage. When the final application has dried and been sanded smooth, the surface is ready for decoration.

Jointing and finishing is not a requirement to meet the fire protection levels for the **FireCase** system.

▶ Refer to **section 9 - FireCase** for guidance.

For full installation details, refer to the British Gypsum **SITE BOOK**, available to download from www.british-gypsum.com

Jointing - Rigidur H

When jointing Rigidur H by hand, use Gyproc Easi-Fill or Gyproc Easi-Fill 45. The joints can be finished using the 250mm and 300mm SpeedTape finishing boxes (quick release versions) if desired. When jointing using the SpeedTape Automatic Taper, use Gyproc ProMix LITE for the best results. Gyproc Joint Cement can be considered, but care needs to be taken to mix to the correct consistency.

Due to the nature of the joints on tapered edge Rigidur H, the Gyproc Joint Tape will need to be bedded down with a 50mm wide taping knife to flatten the tape back onto the joint. Take care to leave sufficient jointing material behind the tape to ensure good adhesion. The joints can then be finished using the 250mm and 300mm SpeedTape finishing boxes (quick release versions).

Jointing - Gyptone boards

Gyproc Joint Tape is bedded in Gyproc Easi-Fill to all four tapered edges and bulk-filled. When set, a finish coat of Gyproc Joint Cement is applied to all joints by hand or using a SpeedTape 175mm finishing box.

Care must be taken not to fill the perforations in the board and thereby impair the sound absorption performance.

The joint treatment is lightly sanded and dusted off. Gyproc Drywall Primer is applied by roller to the entire surface ready for decoration.

Jointing - Rigitone boards

Mix the Rigitone Vario 60 jointing material with clean water (approximately 3 parts water to 1 part filler) and fill a Rigitone Installation Kit with the mixture. Apply the filler to the joints ensuring the joints are completely full, including nominal 5mm-10mm gaps around the perimeter. Failure to fully fill the joint can cause the joint to crack.

The filler should be left to dry for a minimum of 50 minutes before striking the excess material away from the joint. Allow all the joints to dry for a minimum of 24 hours before finishing. Mask the perforations either side of the joints using wet paper tape. Fill the joints and screw heads using Gyproc Easi-Fill, let the material project slightly from the boards to allow for shrinkage and sanding.

To finish a joint where the room layout or design detail has required a Rigitone board to be cut, fill all holes falling on the joint using Rigitone Vario 60 and finish with a layer of Gyproc Easi-Fill or Gyproc Easi-Fill 45.

Once a joint has been filled, remove the masking paper tape immediately. Lightly sand once dry. Remove dust from the board surface and roller apply Gyproc Drywall Primer to the entire surface ready for decoration.

When roller applying Gyproc Drywall Primer and paint finishes, care should be taken to ensure primer or paint does not fill the perforations in the board, as this will impair acoustic performance.

Repairs to plasterboard

▶ Refer to the current British Gypsum **SITE** BOOK, available to download from www.british-gypsum.com

Cleaning equipment

All equipment should be thoroughly cleaned after use. Small residual amounts of set or part-set material will accelerate the set of freshly mixed setting jointing compounds, and residues of compounds left in a wet state will be subject to microbial attack.

Specialist training

The British Gypsum Drywall Academy offers comprehensive ConstructionSkills grant approved off-site training at dedicated training centres throughout the UK. For more information, visit www.british-gypsum.com

Decoration

Painting

After the jointing treatment has set and dried, and any final sanding is complete, the surface should be dusted down and Gyproc Drywall Primer applied by brush, roller or, except for Gyptone or Rigitone perforated boards, suitable spray equipment. The primer evens out differences in surface texture and absorption between the board and jointed areas, to create the ideal surface to receive final decoration. Its early application helps to prevent plasterboards from yellowing. Where vapour control is a requirement the surface should be given two coats of Gyproc Drywall Sealer. Most paints and papers can be applied after Gyproc Drywall Primer or Gyproc Drywall Sealer has dried.

Gyproc Drywall Sealer should not be applied to Glasroc F MULTIBOARD, Glasroc F FIRECASE or Rigidur H.

Wallcoverings

If Gyproc Drywall Sealer is applied in a single coat, steam-stripping at a later date becomes a simple operation. Decoration should follow with the minimum of delay. Most paints and papers can be applied after Gyproc Drywall Primer or Gyproc Drywall Sealer has dried.

Vinyl or other low-permeability wall coverings restrict drying of water-based adhesives. This combination should, therefore, not be applied direct to plasterboard treated with Gyproc Drywall Sealer. The use of specialist adhesives, for example with cloth backed or solid vinyl wall covering, may result in damage to the plasterboard surface during subsequent stripping. If the use of such adhesives is necessary, consideration should be given to cross-lining with lining paper before applying the wall covering.

As with all wall and ceiling areas, high sheen gloss finishes will highlight variations of the surface, particularly with shallow angle lighting. The use of low sheen or matt finishes minimises this risk.

For the correct specification in respect of any applied decorative material, reference should be made to the manufacturer of that material.

For full installation details, refer to the British Gypsum **SITE** BOOK, available to download from www.british-gypsum.com

Performance

Air-drying and setting type compounds

Setting-only compounds - e.g. Gyproc Joint Filler
Jointing compounds used for the joint filling stage(s) are usually setting products. Hardening is not dependent upon atmospheric humidity. Fillers that only harden by setting are hand applied and have low shrinkage. When a setting-only product is applied as a thin layer it may 'dry-out' before it has properly hardened. Setting-only materials are therefore unsuitable for the finishing application, but are particularly suitable for bead fixing.

A setting material should never be applied on top of an air-drying material. Air-drying materials shrink as they dry, which may cause a joint to delaminate under such circumstances.

Air-drying compounds - e.g. Gyproc joint cements
Jointing compounds used for the finishing application are applied more thinly than bulk-fillers and so must have air-drying characteristics in order to harden sufficiently at feathered edges. Air-drying materials can be applied by hand or machine using SpeedTape tools. Air-drying materials may also be used as fillers, but greater time needs to be allowed to permit the material to dry in depth, particularly in cold or humid conditions.

Gyproc Easi-Fill and Gyproc Easi-Fill 45
These products combine the characteristics of both an air-drying and a setting material. Gyproc Easi-Fill can be applied by hand or machine using SpeedTape quick release easy clean finishing boxes. Gyproc Easi-Fill 45 should only be applied by hand. Gyproc Easi-Fill products have shrinkage that is lower than conventional joint fillers and considerably lower than air-drying joint cements, meaning they can also be used with absolute confidence in a two stage application.

Hand versus mechanical application
Hand application provides a versatile option ideal for smaller areas or where the jointing programme cannot be completed in a single operation. Mechanical jointing using SpeedTape mechanical jointing tools provides consistent high speed jointing, which is cost effective where large runs of lining are involved.

SpeedTape tools are available in full or part sets. The full set, for use with an air-drying product, includes tools that automatically bed tape and apply jointing compound at the same time.
Part sets include easy clean finishing boxes that can be used with Gyproc Easi-Fill:

- Ideal for moderate to large areas of drylining.
- Ideal where a number of areas can be finished in sequence.
- Increased productivity.
- Consistent high standards of finish.
- Easy to use.
- Professional training in their use on site is available from the British Gypsum Drywall Academy. For more information, visit www.british-gypsum.com

Coverage
Coverage depends on the grade of jointing compound chosen.
▶ Refer to **Table 3** for guidance.

Table 1 – Coverage data

Gyproc Drywall Primer and Gyproc Drywall Sealer

Product	Pack size	Typical coverage
Gyproc Drywall Primer	10 litre tubs	150m²/10 litre tub (1 coat)
Gyproc Drywall Sealer	10 litre tubs	70m²/10 litre tub (2 coats) 150m²/10 litre tub (1 coat)

Table 2 – Product options

Product	Hardening characteristics	Fill stage(s)	Finish stage(s)	Working time minutes	Setting time minutes
Gyproc Joint Filler	Setting	Preferred	Unsuitable	60	120
Gyproc Joint Cement	Air-drying	Can be used	Preferred	-	-
Gyproc Ready Mix Joint Cement	Air-drying	Can be used	Preferred	-	-
Gyproc ProMix LITE	Air-drying	Can be used	Preferred	-	-
Gyproc Easi-Fill	Setting / air-drying	Preferred	Preferred	60	140
Gyproc Easi-Fill 45	Setting / air-drying	Preferred	Preferred	45	70

Design

Preparation - key stages

1. Boards should be securely fixed, with no steps between adjacent boards.

2. The correct fixings must be used and properly located with their heads just below the liner surface. Any protruding screw heads should be driven home using a hand screwdriver, prior to spotting and jointing.

3. Gaps between boards greater than 3mm should be pre-filled, prior to taping with Gyproc Joint Tape.

4. Jointing materials should not be applied to frozen surfaces and should not be used at, or subjected to, the minimum temperature specified on product packaging during setting or hardening.

Joint reinforcement

In a plasterboard system, suitable joint reinforcement is essential to minimise the risk of cracking along the joints, which could then appear through the decoration.

To achieve the objective of a smooth, continuous, crack-free surface, tapered edge plasterboard and Gyproc Joint Tape are widely regarded as best practice when jointing or plastering. The tapered edges provide a recess for the joint treatment, allowing a flat, finished surface. At board joints, where cut edges or square edge boards occur, the joint treatment is inevitably raised above the board surface and is more difficult to conceal. In this situation the secondary filling stage is omitted, and joint treatment is feathered-out into the field of the board to conceal the joint as much as possible.

Joint treatment has two essential components; the reinforcement and the jointing compound. Reinforcement is necessary where there is relative movement of adjacent boards. In practice, some movement is normal and Gyproc Joint Tape is recommended for the best crack resistance. Thistle ProTape FT50 or FT100 are an alternative, and can be easy and quick to install on flat joints. Thistle ProTape FT50 or FT100, however, are not a direct substitute for Gyproc Joint Tape, as tests have shown that Gyproc Joint Tape provides superior resistance to cracking.

Table 3 – Combinations and coverage data (kg / 100 linear metres)

Jointing system	Reinforcement	Taping coat	1st finish coat	2nd finish coat	3rd finish coat
		coverage kg / 100 linear metres			
Flat joint (tapered edge - hand applied)	Paper tape / fibre tape	12	6	6	-
		12	6	6	-
		12	6	6	-
		9	5	-	-
Flat joint (tapered edge - mechanical)	Paper tape	6	6	6	3
Flat joint (square edge)	Paper tape / fibre tape	3	12	-	-
External angle	Corner tape or Gyproc No-Coat Ultraflex 325	22	9	9	-
		22	9	9	-
		18	9	-	-
	Metal bead	34	9	9	-
		34	9	9	-
		28	12	-	-
Internal angle	Paper tape	12	8	8	-
		12	8	8	-
		12	8	8	-
		10	5	-	-

KEY

- Gyproc Joint Filler
- Gyproc Joint Cement
- Gyproc Easi-Fill / Easi-Fill 45

- These quantities should be used as a guide only - quantities used will vary depending on tools used and accuracy of board alignment.
- Material used for pre-filling gaps, repairing damage, etc is not included.
- When using a ready mix joint cement in place of powder, assume that 1 litre is equivalent to 0.85kg of powder joint cement.
- An allowance for waste and material sanded away should be added as appropriate.
- External angle reinforcements should be fixed using a setting product - Gyproc Joint Filler or Gyproc Easi-Fill / Gyproc Easi-Fill 45, except Glasroc F MULTIBOARD and Glasroc F FIRECASE.

▶ Please refer to **section 3 - Basic principles of system design** for general guidance

Tiling

This section includes updated information, added since it was first published in July 2009. Please see the WHITE BOOK update document for details.
Last updated 05/07/2010

Glenton Road, Lewisham, London

Tiling

Tiles can be applied to drylined walls or to the surface of lightweight partition systems. Tiling can be carried out in any type of building, either in dry areas or in areas subject to intermittent moisture conditions. Typical applications include domestic and commercial toilets, bathrooms and kitchens, and domestic shower areas. Tiles up to 12.5mm thick with a maximum weight of 32kg/m^2 (including grout and adhesive) can be accommodated (20kg/m^2 for a plastered surface). The tiles are fixed using a suitable adhesive.

Key facts

- Suitable for domestic and commercial toilets, bathrooms and kitchens, and domestic shower areas
- Tile weights up to 32kg/m^2 for drylined walls
- Tile weights up to 20kg/m^2 for plastered walls
- Moisture resistant board option for wet use areas

Applications

Kitchens and bathrooms.

Sector

- ✓ Sport and leisure
- ✓ Housing
- ✓ Education
- ✓ Apartment buildings
- ✓ Healthcare
- ✓ High-rise multi-occupancy

System components

Board products

Intermittent moisture conditions

Gyproc Moisture Resistant

Thickness	12.5, 15mm
Width	1200mm

Gyproc FireLine MR

Thickness	12.5, 15mm
Width	1200mm

Gyproc SoundBloc MR

Thickness	12.5, 15mm
Width	1200mm

Gyproc SoundBloc RAPID MR

Thickness	15mm
Width	900mm

Gyproc DuraLine MR

Thickness	15mm
Width	1200mm

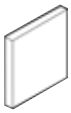

Glasroc F MULTIBOARD

Thickness	6, 10,12.5mm
Width	1200mm

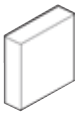

Glasroc F FIRECASE

Thickness	15, 20, 25, 30mm
Width	600, 1200mm

Rigidur H

Thickness	12.5, 15mm
Width	1200mm

NB In dry conditions any paper faced Gyproc board is a suitable substrate for tiling.

NB Tapered edge plasterboards are normally used where part-height tiling occurs. Square edge boards can be used to suit full height and width tiling.

Fixing and finishing products

Gyproc Drywall Sealer
Plasterboard sealer, used in two coats to provide vapour control, or in one coat to protect the board from steam-stripping of wallcoverings.

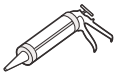

Waterproof sealant (by others)
For sealing cut edges.

Tiles (by others)

Thickness	Up to 12.5mm
Weight	32kg/m² (maximum including adhesive and grout)

Tile adhesive (by others)

Design

Planning - key factors
Gyproc moisture resistant grade boards, Glasroc F MULTIBOARD or Rigidur H are recommended for intermittent moisture applications, including splashbacks. Alternatively, for splashbacks, boards can be coated with two coats of Gyproc Drywall Sealer to prepare for tiling. Cut edges of plasterboards must be appropriately sealed / caulked at abutments. The tolerance on the finished tile surface quoted in *BS 5385: Part 1*, i.e. 3mm under a 2m straightedge with thin-bed adhesives, is such that it will reflect very accurately the standard of the background surface. This is particularly important on timber framed backgrounds. Therefore, if the specification requires this tolerance, the same standards must be applied to the timber framework. Tolerance standards for drylining and partition systems are given in *BS 8212*.

Two coats of Gyproc Drywall Sealer applied to the face of standard grade plasterboards, with the edges adequately protected from moisture may also be suitable to receive a tile finish. The application of Gyproc Drywall Sealer provides surface water absorption resistance only, and does not meet the performance requirements for moisture resistant grade boards as defined in *BS EN 520, type H1*.

Detailing at junctions
Designers must give consideration to the precautions necessary at junctions to ensure that moisture is not allowed to penetrate or collect, e.g. at the base of walls where showers are specified with tiling to plasterboard, and at other junctions such as bath edges.

Perimeter sealing
Standard perimeter sealing methods around baths or shower trays are normally adequate. Caulking sealant can be used to form a fillet between the wall surface and the floor at the base of partition or wall lining to prevent any possible moisture being absorbed by the board core.

Continuity of linings
All partitions and wall linings should be complete. There should be no omissions to board linings, e.g. behind baths.

Timber stud external walls or partitions
Where tiling is specified, designers should ensure that the timber is of sufficient dimensions to give a stable base for the additional loading. The moisture resistance of the timber should be within the limits given in *BS 5268: Structural use of timber - Part 2*.

Movement joints
Reference should be made to Section 3, Clause 19 of *BS 5385: Part 1*.

Tiling directly onto plasterboard
Before tiling commences, any tapered edge joints included within the tiling area should be filled with tile adhesive. Other areas are finished as normal.

Tiling onto plastered surfaces
Tiles up to 20kg/m^2 (including adhesive and grout) can be applied directly to Thistle finish plasters, except where the system includes a bonding agent. In this situation the total weight of tiles and plaster applied over a bonding agent is limited to 20kg/m^2, therefore consideration should be given to tiling directly to the background. If plastering to provide a background for tiles, avoid polishing the surface. Polished plaster surfaces should be roughened and a suitable primer used. Consult the tile adhesive manufacturer for guidance. Tiles should not be applied directly to Thistle undercoats, with the exception of Thistle Dri-Coat.

Gypsum undercoats and finish coats are designed to work together to achieve full strength and therefore tiles should not be applied directly to Thistle undercoats, with the exception of Thistle Dri-Coat.

Tiles should not be applied until the background and plaster are dry. Note that Thistle Hardwall and Thistle Tough Coat dry from the surface, appearing surface dry before they are fully dry throughout.

▶ Please refer to **section 3 - Basic principles of system design** for general guidance

Performance

Table 1 - Tiling on partition systems

System	Board type (including MR variants)	Thickness each side mm
GypWall RAPID	SoundBloc RAPID	15
GypWall ROBUST / EXTREME	DuraLine, Rigidur H	15
GypWall CLASSIC, GypWall QUIET / QUIET IWL		
48mm, 60mm, 70mm, and 92mm stud	Any single layer 15mm board, any double layer specification	15 2 x 12.5 2 x 15 19 + 12.5
146mm stud	Any single layer 15mm board, any double layer specification	15 2 x 12.5 2 x 15 19 + 12.5
Timber stud partitions and separating walls	Any board specification	12.5 or 15
GypWall STAGGERED	SoundBloc	15 2 x 12.5 2 x 15
GypWall QUIET SF	Plank , SoundBloc **Tiles over lining boards fixed to Gypframe RB1 Resilient Bars**	2 x 12.5 2 x 15 19 + 12.5
	Tiles over lining boards fixed to metal studs	2 x 12.5 2 x 15 19 + 12.5
GypWall SECURE	Glasroc F MULTIBOARD	2 x 10
ShaftWall	FireLine	1 x 15 2 x 15 2 x 12.5
GypWall AUDIO	Plank, SoundBloc, FireLine	2 x 12.5 2 x 15 19 + 12.5
FireWall	Glasroc F MULTIBOARD, Glasroc F FIRECASE	2 x 15 2 x 15 + 6

NB The recommendations given are based on experience and laboratory / site testing. In practice, performance will be dependent on factors such as workmanship and site conditions.

Stud centres mm	Additional support
450, or 900 with mid-height nogging	N/A
400	N/A
400	N/A
600	Extra stud to give 300mm centres at tiling height
400, or 600 with noggings	Timber noggings 50mm x 38mm minimum at 600mm centres vertically
400 400 400	N/A
600mm centres, Gypframe RB1 Resilient Bars at 400mm centres	N/A
400mm centres	N/A
600	Studs at 300mm centres (or Gypframe 99 FC 50 Fixing Channel at 1200mm centres) for single layer lining specifications. The two layers of 12.5mm or 15mm plasterboard are bonded with a continuous bead of Gyproc Sealant midway between studs.
400 400 400	N/A
400 400	N/A

Table 2 - Tiling on drylined walls and independent wall lining

System	Board type (including MR variants) mm	Thickness mm	Support centres
DriLyner BASIC Dabs of Gyproc Dri-Wall Adhesive in rows	WallBoard, SoundBloc, Moisure Resistant	9.5 12.5, 15	400 / 450 600
DriLyner TL Dabs of Gyproc Dri-Wall Adhesive in rows	ThermaLine laminates	All	600
DriLyner SI Priming and dabs of Gyproc Dri-Wall Adhesive	TriLine	All	450
DriLyner MF	WallBoard, WallBoard DUPLEX, FireLine, FireLine DUPLEX, Moisture Resistant, DuraLine, SoundBloc	12.5, 15	400
	ThermaLine laminates	All	-
DriLyner RF Blobs of Gyproc Sealant at nominal 300mm centres	ThermaLine laminates	All	-
	TriLine	All	-
Timber battens	WallBoard, WallBoard DUPLEX, FireLine, FireLine DUPLEX, Moisture Resistant, DuraLine, SoundBloc	12.5, 15	400
	ThermaLine laminates	All	-
GypLyner IWL	WallBoard, WallBoard DUPLEX, FireLine, FireLine DUPLEX, Moisture Resistant, SoundBloc	2 x 12.5 15	400
GypLyner UNIVERSAL	WallBoard, Moisture Resistant, DuraLine , SoundBloc	12.5, 15	400

NB The recommendations given are based on experience and laboratory / site testing. In practice, performance will be dependent on factors such as workmanship and site conditions.

Additional support centres	Additional fixings and centres	Comment
Horizontal dabs of Gyproc Dri-Wall adhesive at mid-storey height	N/A	Wall lining left to stand for seven days before tiling begins
Horizontal dabs of Gyproc Dri-Wall adhesive at mid-storey height	Nine Gyproc Nailable Plugs through each board in the area to be tiled	Wall lining left to stand for seven days before tiling begins
Horizontal dabs of Gyproc Dri-Wall adhesive at mid-storey height	Nine Gyproc Nailable Plugs through each board in the area to be tiled	Wall lining left to stand for seven days before tiling begins
N/A	Gyproc Drywall Screws at 300mm centres into each support	Wall lining left to stand for seven days before tiling begins
N/A	Gyproc Drywall Screws at 300mm centres into each support	Wall lining left to stand for seven days before tiling begins
N/A	Nine Gyproc Nailable Plugs through each board in the area to be tiled	Wall lining left to stand for seven days before tiling begins
N/A	Gyproc Nailable Plugs at 600mm centres vertically, 15mm in from each edge	Wall lining left to stand for seven days before tiling begins
Horizontal battens at head, base, and intermediate positions not exceeding 1200mm centres	N/A	N/A
Horizontal battens at head, base, and intermediate positions not exceeding 1200mm centres	N/A	N/A
Mid-height support from framework to structure	N/A	N/A
Fixing brackets at 600mm centres	N/A	N/A

Decorative effects

This section includes updated information, added since it was first published in July 2009. Please see the WHITE BOOK update document for details.
Last updated 05/07/2010

Grosvenor House Hotel, Mayfair

Decorative effects

A wide variety of decorative effects can be achieved quickly and simply using Gyproc accessories to enhance walls and ceilings, and to relieve flat runs of lining, joints and angles. The portfolio of decorative products comprises gypsum cove and cornice profiles and pre-formed, aluminium styletrims. A number of design effects can be achieved by incorporating steps to the wall and ceiling angles, using Gyproc Cornice Battens and Strips.

Key facts

- Cove and Cornice profiles, used with or without steps to enhance wall and ceiling angles
- Range of aluminium trims to relieve flat runs of lining
- Wide variety of attractive drylined effects
- Simple to install

Applications

A wide variety of applications, to provide internal decoration.

Sector

- ✓ Retail
- ✓ Housing
- ✓ Apartment buildings
- ✓ High-rise multi-occupancy

System components

Gyproc Cove and Cornice products

Gyproc Cove 100
Length 3000mm

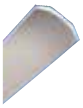

Gyproc Cove 127
Length 3000, 3600, 4200mm

Gyproc Cornice 135
Length 3000mm

Gyproc Cornice Battens

Length	1200mm
Width	25mm
Thickness	10mm

Gyproc Cornice Strips

Length	2400mm
Width	100mm
Thickness	12.5mm

A wide range of cove and accessories, distinctive plaster mouldings and textures are available from Artex. For further information refer to www.artexltd.com

Gyproc Styletrims

BGM 105 Edge Reveal
Used to create a 25mm wide x 10mm deep reveal around drylined wall perimeters, doors, glazing and skirting.
Length 3000mm

BGM 106 Edge Reveal
Used to create a 12.5mm wide x 10mm deep reveal around drylined wall perimeters, doors, glazing and skirting.
Length 3000mm

BGM 119 Edge Stop
Used to create a distinctive straight edge for reveals and other drylining features.
Length 3000mm

Fixing and finishing products

Gyproc Drywall Screws
For pre-fixing Gyproc Styletrims.

Gyproc Cove Adhesive
For adhesive fixing of Gyproc Cove and Cornice products.

Gyproc Sealant
For sealing gaps and / or pre-fixing Gyproc Styletrims.

Gyproc jointing materials
For bedding Gyproc Styletrims and subsequent joint treatment.

Gyproc joint tapes
For reinforcing plasterboard joints and angles.

Application and finishing overview

Cove and Cornice
Guidelines are drawn along the walls and ceiling. Plastered or painted areas that will be in contact with the profile are scratched to provide a key for the adhesive, and any dust or loose material is brushed away. Profiles are cut to length using a fine-tooth saw and mitred using a suitable mitre block. Any rough edges are lightly sandpapered. Gyproc Cove Adhesive or Gyproc Easi-Fill is evenly applied to a 3mm thickness to both surfaces that will be in contact with the wall and ceiling. The wall line is lightly nailed to provide temporary support to the profile until the adhesive has set. The profile is offered up and pushed firmly into position. Nails are applied to the ceiling position if required to provide further temporary support. Temporary nails should be removed and any excess adhesive is used to make good the mitres and any joints. To finish, a moistened paint brush is traced along the junctions of the profile and background. Stop-ends are provided where openings extend to ceiling height. After installation, surfaces are treated with Gyproc Drywall Primer, or a primer recommended for plasterboard by the paint manufacturer, prior to applying the decorative paint finish. Gyproc Cornice Battens can be used to install Gyproc Cornice 135 over existing old cove profiles. Gyproc Cornice Strips can also be used to add extra steps prior to installing the Gyproc Cove.

Styletrims
The framing and plasterboard linings are installed first. Where backgrounds are sufficiently rigid and where the finished work is positioned such that it is protected from impact, Gyproc Styletrims can be fixed by simply bedding in jointing material and following immediately with the joint treatment. Where increased strength and durability are required, mechanical pre-fixing of the Gyproc Styletrims is recommended. This may also be preferred in situations where a number of Gyproc Styletrims are to be fitted, as it enables the fixing operations to be completed independently of jointing and finishing. Gyproc Styletrims can be pre-fixed mechanically or by using Gyproc Sealant.

For full installation details, refer to the British Gypsum **SITE** BOOK, available to download from www.british-gypsum.com

Performance

Sound insulation
Airtightness is essential for optimum sound insulation of plasterboard building elements. Gyproc Cove and Cornice can assist in ensuring that linings meet their stated sound performance levels, since joints will be rendered imperforate during the bonding and jointing / making good process.

Maintaining performance levels
If plasterboard is removed in order to facilitate the installation of Gyproc Styletrims, fire resistance and sound insulation performances will be affected. In most situations it is possible to maintain performance levels by installing additional plasterboard layers over and above the normal lining specification. The lining should be extended sufficiently to provide continuous support.

Design

Backgrounds
Gyproc Cove and Cornice can be installed to clean, dry and sound backgrounds using Gyproc Cove Adhesive or Gyproc Easi-Fill. Where the wall or ceiling has severe irregularities, the profiles can be mechanically fixed using non-rusting screws into plugs. Gaps along the wall or ceiling edge of the profile can be filled with Gyproc Cove Adhesive.

Gyproc Styletrims can be used in conjunction with most British Gypsum wall and ceiling lining systems. Framing centres should not exceed 600mm. Vertical runs of Gyproc Styletrims and all Styletrim joints should be supported by framing members. Where these features occur between normal framing centres, additional members will need to be incorporated. Setting out should therefore be planned before commencing fixing, both to reduce wastage and to allow the position of any extra framing to be determined. Gyproc Styletrim joints should always be backed by plasterboard, and should never be installed so as to give direct contact with framing members. The Gyproc Styletrim profiles are used in conjunction with 12.5mm Gyproc plasterboard linings.

For full installation details, refer to the British Gypsum **SITE BOOK**, available to download from www.british-gypsum.com

Products

This section includes updated information, added since it was first published in July 2009. Please see the WHITE BOOK update document for details.
Last updated 05/07/2010

Main image: Curve, Leicester
Top inset: Grosvenor House Hotel, Mayfair
Bottom inset: Echo Building, Sunderland

Product contents

The extensive range of British Gypsum boards and building plasters is fully supported by high grade metal system components and accessories, and a wide range of ceiling tiles and boards. This unrivalled choice of products enables the designer to specify complete integrated systems with total confidence.

Metal components 494

Gypframe studs 497-498
Gypframe channels 498-499
Gypframe system components 499-505

Boards 506

Gyproc standard plasterboards 508-509
Gyproc performance plasterboards 510-516
Gyproc ThermaLine laminates 517-518
Specialist boards 519-521

Fixings 522

Gyproc fixing products 523-525
Specialist board fixing products 526
Gypframe fixing products 526

Plasterboard accessories 528

Gyproc jointing materials 529-530
Gyproc miscellaneous accessories 531-532
Gyproc beads 533-534

Plasters and plaster accessories 536

Thistle beads for solid plastering 538
Thistle beads for skimming 538
Thistle plaster bonding agents 538
Thistle fibre tapes 539
Thistle undercoat plasters 539
Thistle finish coat plasters 540
Thistle one-coat plasters 540

Decorative products 542

Gyproc Cove, Cornice and Styletrim products 544-545

Access panels 546

Gyproc Profilex Access Panels 548-550

Ceiling products 552

Gyprex tiles 554
Casoprano tiles 555
Gyptone boards, tiles and planks 556-558
CasoLine GRID ceiling components 558
Rigitone boards 559

Insulation 560

Isover insulation products 562-565

Always use genuine branded British Gypsum components to qualify for **SpecSure**® lifetime warranty

Products - Metal components

This section includes updated information, added since it was first published in July 2009. Please see the WHITE BOOK update document for details.
Last updated 05/07/2010

Board installation with Gyproc Collated Drywall Screws
Inset images: John Lewis, Southampton

Gypframe metal components

Gypframe metal components provide the backbone for British Gypsum wall, ceiling, floor, lining and encasement systems. Gypframe provides a guaranteed and substantiated performance through the **SpecSure®** lifetime system warranty.

Gypframe uses a patented rigidisation process unique to British Gypsum called UltraSTEEL®, which alters the characteristics of plain steel, effectively work hardening it. The UltraSTEEL® process involves working steel strips through two patented profiling rolls, which produce a dimpled and ribbed effect across the surface of the material. During the process, the effective gauge of the material is increased to that of the original gauge plus the ribbing. The material is then rolled into Gypframe sections, resulting in a product that not only looks different but is physically superior to untreated metal of the same thickness.

Benefits of UltraSTEEL®:
UltraSTEEL® is unique to British Gypsum and the Gypframe product range. Along with an aesthetic difference, UltraSTEEL® provides the following additional benefits over plain steel sections:

- Improved yield strength
- Improved load carrying capacity
- Improved screw retention and strip out strength
- Improved resistance to screw pull-out

Standards:
Gypframe metal products are produced to the European manufacturing standard *EN 14195*, under a quality system independently audited and certified as conforming to ISO 9001. The *EN 14195* standard does not cover component design or system performance. Other products manufactured to this standard cannot be substituted, as system performance will be changed.

Metal components index

Gypframe studs

'C' Studs	497
AcouStuds	497
'I' Studs	498

Gypframe channels

Standard Floor & Ceiling Channels	498
Deep Flange Floor & Ceiling Channels	499
Extra Deep Flange Floor & Ceiling Channels	499
CasoLine MF ceiling channels and accessories	499
GypLyner channels and accessories	500
GypFloor SB steel batten and accessories	500
ShaftWall starter channels and accessories	501
GypFloor SILENT channels and accessories	501
Fixing channels	502
GypWall RAPID studs, channels and accessories	502
CurveLyner channel	502
FlameLyner components	503

Gypframe steel angles

Steel angles	503

Specialist profiles

Board jointing components	504
Sound insulating bars	504
Skirting plates	504
Security sheet	504

Gypframe clips, brackets and accessories

Acoustic braces	505
Acoustic hangers	505
Staggered stud clips	505

Always use genuine branded British Gypsum components to qualify for **SpecSure®** lifetime warranty

Bespoke Gypframe

Driven by the demands of modern building designs, British Gypsum has widened its Gypframe bespoke product range to provide architects, specifiers, contractors and clients with ultimate flexibility. Specifying bespoke metal lengths can speed up construction as there is no need to trim them to the correct length, and will save waste on site, helping with site safety and cost reduction. Bespoke length metal is also available for curved walls, where you can specify the required radius. Bespoke profiles are highlighted throughout this section.

Gypframe reference codes and abbreviations

The first two or three digits of a component code refer to the component width in mm, the letters refer to the component type and the last two digits indicate metal thickness or gauge (see example below).

60 I 50		
Component width in mm Example = 60mm	Component type Example = 'I' Stud	Stud gauge Example = 0.50mm

Key	Gypframe component	Flange dimension mm
S	'C' Stud	32, 34, 36 (GWR studs)
I	'I' Stud	38
AS	AcouStud	42 (43mm stud), 41 & 44 (70mm & 146mm stud)
C	Channel	32
DC	Deep Flange Channel	50
EDC	Extra Deep Flange Channel	70
JC	'J' Channel	50, 70
SC	Starter Channel	32
FC	Fixing Channel	-
CL	CurveLyner Channel	32
T	Tabbed	-

Metal thickness (stud gauge)	
50 = 0.50mm	70 = 0.70mm
55 = 0.55mm	80 = 0.80mm
60 = 0.60mm	90 = 0.90mm
65 = 0.65mm	10 = 1.00mm

Always use genuine branded British Gypsum components to qualify for **SpecSure®** lifetime warranty

Gypframe 'C' Studs

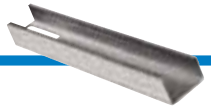

The Gypframe 'C' Stud design includes sight lines down the legs of the stud to ease board alignment and increase profile strength. Structural apertures are also spaced along the spine of the Gypframe 'C' Stud, providing easy routing of services through a partition.

	Available length mm
48 S 50 'C' Stud[1]	2400, 2700, 3000, 3600
60 S 50 'C' Stud[1]	3000, 3600
70 S 50 'C' Stud[1]	2400, 2700, 3000, 3600, 4200
70 S 60 'C' Stud[1]	3600, 4200
92 S 50 'C' Stud[1]	3600, 4200
92 S 60 'C' Stud[1]	4200
92 S 10 'C' Stud[1]	3600, 4200
146 S 50 'C' Stud[1]	3000, 3600, 4200

Gypframe AcouStuds

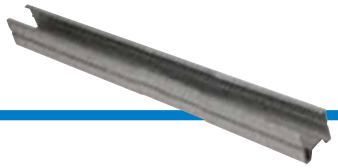

These uniquely shaped studs are used for increased acoustic performance, with the patented profile absorbing sound as it passes through a wall. Gypframe AcouStuds can be used to upgrade the acoustic performance of 43mm, 70mm, 92mm and 146mm wall systems without using insulation and the design includes sight lines for both board alignment and added profile strength. They also have wider flange widths than Gypframe 'C' Studs, providing an increased board fixing area.

	Available length mm
43 AS 50 AcouStud[1]	2395, 2695
70 AS 50 AcouStud[1]	2400, 2700, 3000, 3600, 4200
92 AS 50 AcouStud[1]	3600, 4200
146 AS 50 AcouStud[1]	3600

[1] Bespoke lengths are available.

Always use genuine branded British Gypsum components to qualify for **SpecSure**® lifetime warranty

Gypframe 'I' Studs

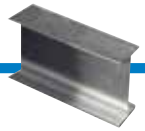

Gypframe 'I' Studs are the strongest available in the Gypframe range. They allow for increased partition height, without increasing partition width, and provide improved impact resistance. They are commonly used in **ShaftWall**, **GypLyner IWL**, **GypWall QUIET IWL** and other **GypWall** systems where board fixing strength is paramount. Structural apertures are spaced along the spine of the Gypframe 'I' Stud, providing easy routing of services through a partition.

	Available length mm
48 I 50 'I' Stud[1]	2700, 3000
60 I 50 'I' Stud[1]	2700, 3600
60 I 70 'I' Stud[1]	3600, 4200
70 I 50 'I' Stud[1]	3600, 4200
70 I 70 'I' Stud[1]	3600, 4200
92 I 90 'I' Stud[1]	3600, 5000, 6000
146 I 80 'I' Stud[1]	5000, 6000
146 TI 90 Tabbed 'I' Stud[1]	5000, 6000

Gypframe Standard Floor & Ceiling Channels

These products are used for retaining wall studs at floor and ceiling junctions. In addition to Standard (C) channels, Deep Flange (DC) and Extra Deep Flange (EDC) versions are available for greater partition heights, or in situations where deflection head details, improved impact resistance and easier skirting fixing are required.

	Available length mm
50 C 50[1]	3600
62 C 50[1]	3600
72 C 50[1]	3600
94 C 50[1]	3600
94 C 70[1]	3600
148 C 50[1]	3600

[1] Bespoke lengths are available.

Always use genuine branded British Gypsum components to qualify for **SpecSure**® lifetime warranty

Gypframe Deep Flange Floor & Ceiling Channels

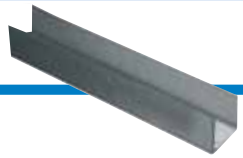

Designed for partitions between 4200mm and 8000mm high, and for situations where deflection, improved impact resistance and easier skirting fixing are required.

	Available length mm
50 DC 60[1]	
	3600
62 DC 60[1]	
	3600
72 DC 60[1]	
	3600
94 DC 60[1]	
	3600
148 DC 60[1]	
	3600

Gypframe Extra Deep Flange Floor & Ceiling Channels

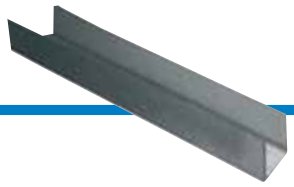

Designed for partitions over 8000mm high, and for situations where increased deflection, improved impact resistance and easier skirting fixing are required.

	Available length mm
50 EDC 70[1]	
	3600
72 EDC 80[1]	
	3600
94 EDC 70[1]	
	3600
148 EDC 80[1]	
	3600

CasoLine MF ceiling channels and accessories

These channels and associated accessories are designed to provide seamless suspended ceilings that can be either flat or curved.

		Dimensions mm
MF5 Ceiling Section[1]		
		3600
MF6 Perimeter Channel		
		3600
MF7 Primary Support Channel[1]	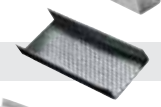	
		3600
MF7C Curved Support Channel[2]		
		3600
MF8 Strap Hanger		**1 coil**
		25 metre
MF9 Connecting Clip		**Box 200**
		2.65mm gauge
MF11 Nut and Bolt		**Box 200**
		6 x 12mm Bolt
MF12 Soffit Cleat		**Box 100**
		27 x 37 x 25 x 1.6mm

[1] Bespoke lengths are available.
[2] Bespoke radius available. Minimum order quantity applies.

Always use genuine branded British Gypsum components to qualify for **SpecSure**® lifetime warranty

GypLyner channels and accessories

This range of channels and accessories is designed for the easy installation of plasterboard linings on masonry walls, concrete soffits, timber joists, and the encasement of steel columns and beams.

		Length mm
GL1 Lining Channel[1]		2400, 2700, 3000, 3600
GL2 Bracket (supplied flat)	**Box 100**	195
GL3 Channel Connector	**Box 50**	-
GL5 Timber Connector	**Box 200**	70
GL6 Timber Connector	**Box 100**	170
GL8 Track		3600
GL9 Bracket (supplied flat)	**Box 100**	295
GL10 GypLyner Steel Framing Clips	**Box 100**	-
GL11 GypLyner Anchors	**Box 100**	-
MF10 Channel		2800

GypFloor SB steel battens and accessories

The battens and associated components that make up the GypFloor SB system are for use with both timber and masonry seperating floors.

		Length mm
50 SB 65 Steel Batten		1800
70 SB 65 Steel Batten		1800
SB3 Flanking Strip		10m
SB4 Levelling Cradle		-
SB5 Levelling Packer		-

[1] Bespoke lengths are available.

Always use genuine branded British Gypsum components to qualify for **SpecSure**® lifetime warranty

ShaftWall starter channels and accessories

This range of channels and compatible accessories is designed especially for the high performance ShaftWall system, providing guaranteed floor, wall, head and retaining support.

	Length mm
60 SC 55 Starter Channel[1]	3600
62 JC 70 'J' Channel[1]	3600
70 SC 70 Starter Channel[1]	3600, 4200
92 SC 90 Starter Channel[1]	5000, 6000
146 TSC 90 Tabbed Starter Channel[1]	5000, 6000
G102 Retaining Channel[1]	2400
G105 Retaining Channel[1]	2400
G108 Retaining Clips	**Box 100** -
G109 Retaining Clips	**Box 100** -
G110 Retaining Channel[1]	2400

GypFloor SILENT channels and accessories

Providing support for the GypFloor SILENT acoustic floor system, these channels incorporate an integral neoprene acoustic isolator.

	Length mm
SIF1 Floor Channel	2000
SIF2 Floor Channel	2000
SIF4 Floor Channel	2000
SIF5 Floor Screws	**Box 1000** 55

[1] Bespoke lengths are available.

Always use genuine branded British Gypsum components to qualify for **SpecSure**® lifetime warranty

Fixing channels

Gypframe fixing channels are used for a variety of applications, including cross-bracing on twin frame wall systems and the fixing of medium to heavyweight fittings.

	Length mm	
99 FC 50 Fixing Channel		
Used for bracing twin frame wall systems and medium weight fixtures to *BS 5234*.	2400	
150 FC 90 Fixing Channel		
Suitable for heavyweight fixings.	1194	
Service Support Plate		**Box 100**
Used for the installation of plywood within a partition cavity.	130	

GypWall RAPID dB Plus channels

These studs, channels and accessories are designed to be used together to form the GypWall RAPID dB Plus housing partition.

	Length mm
GWR2 Nogging Channel 43mm	
	896
GWR3 Floor & Ceiling Channel (45 C 50)	
	2400
43 AS 50 AcouStud[1]	
	2395, 2695

CurveLyner Channel

A patented version of Gypframe Extra Deep Flange Floor & Ceiling Channel with an innovative design to simplify the construction of curved walls to a minimum radius of 600mm.

	Length mm
72 EDCL 80 CurveLyner Channel	
	2000

[1] Bespoke lengths are available.

Always use genuine branded British Gypsum components to qualify for **SpecSure**® lifetime warranty

FlameLyner components

Components for the **FlameLyner** fire resisting industrial wall and roof lining system, gives up to 120 minutes fire resistance for industrial buildings.

	Length mm
GT1 Main 'T'	
	3600
GT2 Cross 'T'	
	603
GT3 Spring Wedge	**Box 1000**
	-
GT4A Bracing Strap	
	300
GT4B Bracing Strap	
	450
GT5 Steel Angle	
	3000 (24mm x 24mm x 90°)

Gypframe steel angles

Gypframe steel angles are widely used in framed construction to provide support, protection, fixing and additional strength to wall, ceiling and encasement framing.

	Length mm
GA1 Steel Angle (25 x 25 x 0.5mm)	
	2900
GA2 Steel Angle (25 x 25 x 0.7mm)	
	3200
GA3 Steel Angle (19 x 32 x 0.7mm)	
	3200
GA4 Steel Angle (25 x 50 x 0.7mm)	
	3660
GA5 Internal Fixing Angle (60 x 60 x 0.5mm)	
	3600
GA6 Splayed Angle (85 x 85 x 0.5mm)	
	2400, 3600

Always use genuine branded British Gypsum components to qualify for **SpecSure®** lifetime warranty

Specialist profiles

Board jointing components

Products used to support horizontal plasterboard joints.

	Length mm
GFS1 Fixing Strap (70 x 0.5mm)	2400
GFT1 Fixing 'T' (50 x 0.5mm)	2400

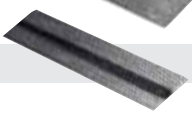

Sound insulating bars

These products are specially engineered to optimise acoustic performance.

	Length mm
RB1 Resilient Bar For use in wall and ceiling systems.	3000
RB2 SureFix Bar Designed for use with ceiling systems, and will also eliminate nail popping.	3000

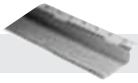

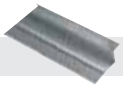

Skirting plate

A specially designed product for use with thermal laminates to provide a fixing for skirting boards.

	Depth mm
G106 Skirting Plate	**Box 100** 12.5

Security sheet

An engineered sheet for use in the cavity of the GypWall SECURE system to provide additional resistance to determined attack.

	Dimensions mm
Security Sheet	3000 x 1070

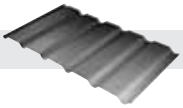

Acoustic braces

Specially engineered product to optimise acoustic performance in the GypWall AUDIO system in high performance applications, such as cinemas.

		Length mm
GAB3 Acoustic Brace	Box 25	459mm

Acoustic hangers

Resilient hangers used in conjunction with CasoLine MF ceiling system and timber joist ceilings and floors for increased acoustic performance.

		Length mm
GAH1 Acoustic Hanger	Box 100	35
GAH2 Acoustic Hanger	Box 100	70

Staggered stud clips

Clips for use in the GypWall STAGGERED acoustic partition system for positioning and securing studs.

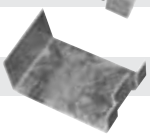

SC1 Spacer Clip	Box 100
SC2 Spacer Clip	Box 100

Always use genuine branded British Gypsum components to qualify for **SpecSure**® lifetime warranty

Products - Boards

This section includes updated information, added since it was first published in July 2009. Please see the WHITE BOOK update document for details.
Last updated 05/07/2010

Main image: Manchester Joint Hospitals
Top inset: British Gypsum Product Training Centre, East Leake
Bottom inset: Cadbury offices, Bournville, Birmingham

Gyproc plasterboards

Gyproc plasterboards are the ultimate lining solution for today's buildings, providing high levels of fire, sound, thermal, moisture and impact resistance to create modern internal environments that offer comfort and safety for occupants. They offer high quality, high performance linings for walls and ceilings, lift shafts and stairwells, corridors and auditoria, in buildings as diverse as houses, schools, hospitals and cinemas.

Bespoke products

British Gypsum offers a comprehensive bespoke service for the Gyproc plasterboard and Gypframe metal product ranges. Whether you require a non-standard length, alternative edge profile or other specification change, we'll try to provide you with the best solution for your project.

Specialist boards

Specialist boards have been developed for demanding applications calling for high levels of combined fire, moisture, and impact resistance. The unique properties of this exceptionally fine-surfaced, paperless gypsum board provide solutions for a range of applications, from frameless encasement of steelwork for advanced fire protection, thermal insulation of semi-exposed soffits and the lining of steel-framed walls in industrial buildings, to the creation of aesthetically inspiring curved structures.

Board product index

Gyproc standard plasterboards

Gyproc WallBoard	508
Gyproc WallBoard 4TE	508
Gyproc HandiBoard	509
Gyproc Plank	509

Gyproc performance plasterboards

Gyproc WallBoard TEN	510
Gyproc WallBoard DUPLEX	510
Gyproc Moisture Resistant	511
Gyproc FireLine	511
Gyproc FireLine DUPLEX	512
Gyproc FireLine MR	512
Gyproc CoreBoard	513
Gyproc SoundBloc	513
Gyproc SoundBloc MR	514
Gyproc SoundBloc RAPID	514
Gyproc SoundBloc RAPID MR	515
Gyproc DuraLine	515
Gyproc DuraLine MR	516
Gyproc Ergo900	516

Gyproc ThermaLine laminates

Gyproc TriLine	517
Gyproc ThermaLine BASIC	517
Gyproc ThermaLine PLUS	518
Gyproc ThermaLine SUPER	518

Specialist boards

Glasroc F FIRECASE	519
Glasroc F MULTIBOARD	519
Glasroc F SOFFITLINE	520
Glasroc F FLAMELINE	520
Rigidur H	521

Section key

KG - Approx. weight kg/m²
R - Thermal resistance m²K/W
S/E - Square edge
T/E - Tapered edge
λ - Thermal conductivity W/mK

For information on *EN 520, EN 13950, EN 14190, EN 15283*:

▶ Refer to section 3.6 – Basic principles of system design, Standards.

Always use genuine branded British Gypsum components to qualify for **SpecSure®** lifetime warranty

Gyproc standard plasterboards

Gyproc WallBoard

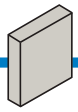

Characteristics
Standard board product.

Application
Suitable for most applications where normal fire, structural and acoustic levels are specified. Suitable for direct decoration or Thistle plaster finish.

Board colour
- Ivory face paper.
- Brown reverse side paper.

Board printing
Face - screw centre markings 'x'.
Edge - product code, EAN number, board thickness x width x length, edge type.
Reverse - standard and certification.

Finishing
T/E - with Gyproc jointing materials for taped and filled joints or application of Thistle Board Finish, Thistle Multi-Finish or Thistle Durafinish plaster.
S/E - for plaster application, Artex texture finish or undecorated applications.

Standard and certification
Conforms to *EN 520 - Type A.*

Thermal conductivity
λ 0.19W/mK.

Width mm	Length mm	Edge type
9.5mm board	KG = 6.3	R = 0.05
900	1800	T/E S/E
1200	2400	T/E S/E
12.5mm board	KG = 8.0	R = 0.07
900	1800	T/E S/E
	2400	T/E S/E
1200	2400	T/E S/E
	2500	T/E S/E
	2700	T/E S/E
	3000	T/E S/E
15mm board	KG = 9.8	R = 0.08
	3600	T/E
900	1800	T/E
	2400	T/E S/E

Gyproc WallBoard 4TE

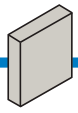

Characteristics
Standard non-performance board product.

Application
Gyproc WallBoard 4TE (4 Tapered Edge) is a new non-performance board product designed for use in high specification public spaces that feature large area wall and ceiling surfaces which are subject to strong, direct lighting.

Board colour
- Ivory face paper.
- Brown reverse side paper.

Board printing
Face - none.
Reverse - standard and certification.

Finishing
4T/E - with Gyproc jointing materials for taped and filled joints.

Standard and certification
Conforms to *BS EN 14190.*

Thermal conductivity
λ 0.19W/mK.

Width mm	Length mm	Edge type
12.5mm board	KG = 8.0	R = 0.07
1200	2400	4T/E

Always use genuine branded British Gypsum components to qualify for **SpecSure**® lifetime warranty

Gyproc standard plasterboards

Gyproc HandiBoard

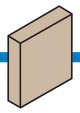

Width mm	Length mm	Edge type
9.5mm board	KG = 6.3	R = 0.05
900	1220	S/E
12.5mm board	KG = 8	R = 0.07
600	1220	S/E

Characteristics
Smaller size, easy-to-use board with a specially modified liner and controlled suction characteristics.

Application
Designed for Thistle plaster application. Length is compatible with both 16" and 24" joist centres, for ceiling linings.

Board colour
- Ivory face paper.
- Brown reverse side paper.

Board printing
Face - none.
Edge - product code, EAN number, board thickness x width x length, edge type.
Reverse - standard and certification.

Finishing
S/E - for application of Thistle Board Finish, Thistle Multi-Finish or Thistle Durafinish plaster.

Standard and certification
Conforms to *EN 520 - Type P.*

Thermal conductivity
λ 0.19W/mK.

Gyproc Plank

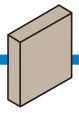

Width mm	Length mm	Edge type
19mm board	KG = 15	R = 0.10
600	2400	T/E S/E

Characteristics
A 19mm thick version of Gyproc WallBoard.

Application
Used as the main board in British Gypsum GypFloor SILENT, GypWall AUDIO and GypWall QUIET systems.

Board colour

T/E
- Ivory face paper.
- Brown reverse side paper.

S/E
- Brown face paper.
- Brown reverse side paper.

Board printing
Face - screw centre markings 'x'.
Edge - product code, EAN number, board thickness x width x length, edge type.
Reverse - standard and certification.

Finishing
T/E - with Gyproc jointing materials for taped and filled joints or application of Thistle Board Finish, Thistle Multi-Finish or Thistle Durafinish plaster.
S/E - N/A when used as a base layer.

Standard and certification
Conforms to *EN 520 - Type A.*

Thermal conductivity
λ 0.19W/mK.

Gyproc performance plasterboards

Gyproc WallBoard TEN

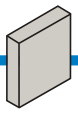

Width mm	Length mm	Edge type
12.5mm board	KG = 10	R = 0.07
1200	2400	T/E

Characteristics
Performance board product with specifically engineered weight of 10kg/m².

Application
Engineered to meet the guidance given in the Building Regulations Approved Document E, that states plasterboard, where used, must have a minimum mass of 10kg/m² for internal and separating constructions in all residential projects, both new-build and refurbishment.

Board colour
- Ivory face paper.
- Brown reverse side paper.

Board printing
Face - WallBoard TEN, screw centre markings 'x'.
Edge - product code, EAN number, board thickness x width x length, edge type.
Reverse - standard and certification.

Finishing
T/E - with Gyproc jointing materials for taped and filled joints or application of Thistle Board Finish, Thistle Multi-Finish or Thistle Durafinish plaster.

Standard and certification
Conforms to *EN 520 - Type D.*

Thermal conductivity
λ 0.19W/mK.

Gyproc WallBoard DUPLEX

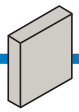

Width mm	Length mm	Edge type
12.5mm board	KG = 8.0	R = 0.41[1]
900	1800	S/E
1200	2400	T/E S/E
	2700	T/E
	3000	T/E
15mm board	KG = 9.8	R = 0.42[1]
1200	2400	T/E

Characteristics
Gyproc WallBoard backed with a vapour control membrane.

Application
Used for wall and ceiling linings where vapour control and a plasterboard lining are required in one fixing operation.

Board colour
- Ivory face paper.
- Metalised polyester film, reverse.

Board printing
Face - screw centre markings 'x'.
Edge - product code, EAN number, board thickness x width x length, edge type.

Finishing
T/E - with Gyproc jointing materials for taped and filled joints or application of Thistle Board Finish, Thistle Multi-Finish or Thistle Durafinish plaster.
S/E - for plaster application, Artex texture finish or undecorated applications.

Standard and certification
Conforms to *EN 14190.*

Thermal conductivity
λ 0.19W/mK.

Always use genuine branded British Gypsum components to qualify for **SpecSure®** lifetime warranty

Gyproc performance plasterboards

Gyproc Moisture Resistant

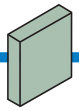

Width mm	Length mm	Edge type
12.5mm board	KG = 8.6	R = 0.07
1200	2400	T/E S/E
	2700	T/E
	3000	T/E
15mm board	KG = 10.1	R = 0.08
1200	2400	T/E

Characteristics
Gypsum plasterboard with water repellent additives in the core and paper liners.

Application
Suitable as a base for tiling in wet use areas. Also used for external soffits in sheltered positions.

Board colour
- Green face paper.
- Green reverse side paper.

Board printing
Face - screw centre markings 'x'.
Edge - product code, EAN number, board thickness x width x length, edge type.
Reverse - standard and certification.

Finishing
T/E - with Gyproc jointing materials for taped and filled joints.
S/E - for undecorated applications or as a base for ceramic tiling.

Standard and certification
Conforms to *EN 520 - Types A and H1*.

Thermal conductivity
λ 0.19W/mK.

Gyproc FireLine

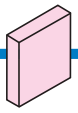

Width mm	Length mm	Edge type
12.5mm board	KG = 9.8	R = 0.05
900	1800	T/E S/E
1200	2400	T/E S/E
	2700	T/E
15mm board	KG = 11.7	R = 0.06
	3000	T/E
900	1800	T/E
1200	2400	T/E S/E
	2700	T/E

Characteristics
Gypsum plasterboard with glass fibre and other additives in the core.

Application
Used in British Gypsum partition, wall lining and ceiling systems to give increased fire protection. Also used for protection to structural steel.

Board colour
- Pink face paper.
- Brown reverse side paper.

Board printing
Face - screw centre markings 'x'.
Edge - product code, EAN number, board thickness x width x length, edge type.
Reverse - standard and certification.

Finishing
T/E - with Gyproc jointing materials for taped and filled joints or application of Thistle Board Finish, Thistle Multi-Finish or Thistle Durafinish plaster.
S/E - for plaster application or undecorated applications.

Standard and certification
Conforms to *EN 520 - Type F.*

Thermal conductivity
λ 0.24W/mK.

Always use genuine branded British Gypsum components to qualify for **SpecSure**® lifetime warranty

Gyproc performance plasterboards

Gyproc FireLine DUPLEX

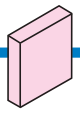

Width mm	Length mm	Edge type
12.5mm board	KG = 9.8	R = 0.39[1]
1200	2400	T/E

[1] Including 25mm minimum air space.

Characteristics
Gypsum plasterboard with glass fibre and other additives in the core, backed with a vapour control membrane.

Application
Used in British Gypsum partition, wall lining and ceiling systems to give increased fire protection with vapour control. Also used for protection to structural steel.

Board colour
- Pink face paper.
- Metalised polyester film.

Board printing
Face - screw centre markings 'x'.
Edge - product code, EAN number, board thickness x width x length, edge type.

Finishing
T/E - with Gyproc jointing materials for taped and filled joints or application of Thistle Board Finish, Thistle Multi-Finish or Thistle Durafinish plaster.

Standard and certification
Conforms to *EN 14190*.

Thermal conductivity
λ 0.24W/mK.

Gyproc FireLine MR

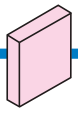

Width mm	Length mm	Edge type
12.5mm board	KG = 9.8	R = 0.05
1200	3000	T/E
15mm board	KG = 11.7	R = 0.06
1200	3000	T/E

Characteristics
Gyproc FireLine with water repellent additives in the core.

Application
Used in British Gypsum partition and wall lining systems where both fire protection and moisture resistance are required. Also used for protection to structural steel.

Board colour
- Pink face paper.
- Pink reverse side paper.

Board printing
Face - FireLine MR, screw centre markings 'x'.
Edge - product code, EAN number, board thickness x width x length, edge type.
Reverse - standard and certification.

Finishing
T/E - with Gyproc jointing materials for taped and filled joints.

Standard and certification
Conforms to *EN 520 - Type F, H1*.

Thermal conductivity
λ 0.24W/mK.

Gyproc performance plasterboards

Gyproc CoreBoard

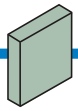

Width mm	Length mm	Edge type
19mm board	KG = 16	R = 0.08
598	3000	S/E

Characteristics
A 19mm thick version of Gyproc FireLine MR board.

Application
Used as the main board in the British Gypsum **ShaftWall** system to provide fire protection with temporary moisture protection during construction.

Board colour
- Green face paper.
- Green reverse side paper.

Board printing
Face - screw centre markings 'x'.
Edge - product code, EAN number, board thickness x width x length, edge type.
Reverse - standard and certification.

Standard and certification
Conforms to *EN 520 - Types D, F and H1.*

Thermal conductivity
λ 0.24W/mK.

Gyproc SoundBloc

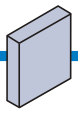

Width mm	Length mm	Edge type
12.5mm board	KG = 10.6	R = 0.05
1200	2400	T/E
	2700	T/E
	3000	T/E
15mm board	KG = 12.6	R = 0.06
1200	2400	T/E
	2700	T/E
	3000	T/E

Characteristics
Gypsum plasterboard with a higher density core.

Application
Designed for use in British Gypsum wall and partition systems where greater levels of sound insulation are required.

Board colour
- Pale blue face paper.
- Brown reverse side paper.

Board printing
Face - screw centre markings 'x'.
Edge - product code, EAN number, board thickness x width x length, edge type.
Reverse - standard and certification.

Finishing
T/E - with Gyproc jointing materials for taped and filled joints or application of Thistle Board Finish, Thistle Multi-Finish or Thistle Durafinish plaster.

Standard and certification
Conforms to *EN 520 - Type D.*

Thermal conductivity
λ 0.25W/mK.

Always use genuine branded British Gypsum components to qualify for **SpecSure**® lifetime warranty

Gyproc SoundBloc MR

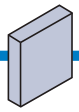

Width mm	Length mm	Edge type
12.5mm board	KG = 10.6	R = 0.05
1200	2400	T/E
	2700	T/E
15mm board	KG = 12.6	R = 0.06
1200	2400	T/E
	2700	T/E

Characteristics
Gypsum plasterboard with a higher density core and water repellent additives.

Application
Designed for use in British Gypsum wall and partition systems where moisture resistance and greater levels of sound insulation are required.

Board colour
- Pale blue face paper.
- Green reverse side paper.

Board printing
Face - SoundBloc MR, screw centre markings 'x'.
Edge - product code, EAN number, board thickness x width x length, edge type.
Reverse - standard and certification.

Finishing
T/E - with Gyproc jointing materials for taped and filled joints.

Standard and certification
Conforms to *EN 520 - Types D and H1.*

Thermal conductivity
λ 0.25W/mK.

Gyproc SoundBloc RAPID

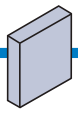

Width mm	Length mm	Edge type
15mm board	KG = 12.6	R = 0.06
900	1800	T/E
	2400	T/E
	2700	T/E

Characteristics
Gypsum plasterboard with a higher density core, in a special dimensional configuration.

Application
Used in the British Gypsum **GypWall** RAPID system, a quick to erect, high performance internal wall system for housing applications.

Board colour
- Pale blue face paper.
- Brown reverse side paper.

Board printing
Face - Screw centre markings 'x'.
Edge - product code, EAN number, board thickness x width x length, edge type.
Reverse - standard and certification.

Finishing
T/E - with Gyproc jointing materials for taped and filled joints or application of Thistle Board Finish, Thistle Multi-Finish or Thistle Durafinish plaster.

Standard and certification
Conforms to *EN 520 - Type D.*

Thermal conductivity
λ 0.25W/mK.

Always use genuine branded British Gypsum components to qualify for **SpecSure**® lifetime warranty

Gyproc performance plasterboards

Gyproc SoundBloc RAPID MR

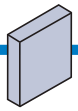

Width mm	Length mm	Edge type
15mm board	KG = 12.6	R = 0.06
900	2400	T/E

Characteristics
Gypsum plasterboard with moisture resistant additives and a higher density core, in a special dimensional configuration.

Application
Used in the British Gypsum GypWall RAPID system, a quick to erect, high performance internal wall system for housing applications.

Board colour
- Pale blue face paper.
- Green reverse side paper.

Board printing
Face - SoundBloc RAPID MR, screw centre markings 'x'.
Edge - product code, EAN number, board thickness x width x length, edge type.
Reverse - standard and certification.

Finishing
T/E - with Gyproc jointing materials for taped and filled joints.

Standard and certification
Conforms to *EN 520 - Types D and H1.*

Thermal conductivity
λ 0.25W/mK.

Gyproc DuraLine

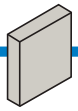

Width mm	Length mm	Edge type
15mm board	KG = 13.9	R = 0.06
1200	2400	T/E
	3000	T/E

Characteristics
Higher density core with glass fibre and other additives.

Application
Designed for use in the British Gypsum GypWall ROBUST system to give greater impact resistance in heavy use areas.

Board colour
- Ivory face paper.
- Brown reverse side paper.

Board printing
Face - DuraLine, screw centre markings 'x'.
Edge - product code, EAN number, board thickness x width x length, edge type.
Reverse - standard and certification.

Finishing
T/E - with Gyproc jointing materials for taped and filled joints or application of Thistle Board Finish, Thistle Multi-Finish or Thistle Durafinish plaster.

Standard and certification
Conforms to *EN 520 - Types D, F, I and R.*

Thermal conductivity
λ 0.25W/mK.

Always use genuine branded British Gypsum components to qualify for **SpecSure®** lifetime warranty

Gyproc performance plasterboards

Gyproc DuraLine MR

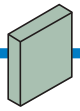

Width mm	Length mm	Edge type
15mm board KG = 13.9 R = 0.06		
1200	2400	T/E
	3000	T/E

Characteristics
Gyproc DuraLine with water repellent additives in the core.

Application
Designed for use in the British Gypsum **GypWall ROBUST** system to give moisture resistance and greater impact resistance in heavy use areas.

Board colour
- Green face paper.
- Green reverse side paper.

Board printing
Face - DuraLine MR, screw centre markings 'x'.
Edge - product code, EAN number, board thickness x width x length, edge type.
Reverse - standard and certification.

Finishing
T/E - with Gyproc jointing materials for taped and filled joints.

Standard and certification
Conforms to *EN 520 - Types D, F, I, R and H1.*

Thermal conductivity
λ 0.25W/mK.

Gyproc Ergo900

Width mm	Length mm	Edge type
12.5mm board KG = 11.5 R = 0.05		
900	2400	T/E

Characteristics
Gypsum plasterboard with a high density core with glass fibre and other additives.

Application
Designed for use with the British Gypsum **GypWall CLASSIC** system to give enhanced manual handling properties during installation.

Board colour
- Yellow face paper.
- Brown reverse side paper.

Board printing
Face - screw centre markings 'x'.
Edge - product code, EAN number, board thickness x width x length, edge type.
Reverse - standard and certification.

Finishing
T/E - with Gyproc jointing materials for taped and filled joints or application of Thistle Board Finish, Thistle Multi-Finish or Thistle Durafinish plaster.

Standard and certification
Conforms to *EN 520 - Types D and F.*

Thermal conductivity
λ 0.25W/mK.

Gyproc ThermaLine laminates

Gyproc TriLine

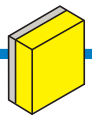

Width mm	Length mm	Edge type
52mm board	KG = 13	R = 1.25
900	2400	T/E

Characteristics
12.5mm Gyproc WallBoard factory-bonded to CFC and HCFC-free, meaning zero ODP (Ozone Depletion Potential), glass mineral wool backing.

Application
Used to upgrade the acoustic performance of masonry separating walls, whilst also providing some improvement to thermal insulation.

Board colour
- Faced with ivory coloured Gyproc WallBoard.
- Backed with yellow coloured glass mineral wool.

Board printing
Face - screw centre markings 'x'.
Edge - product code, EAN number, board thickness x width x length, edge type.

Finishing
T/E - with Gyproc jointing materials for taped and filled joints or application of Thistle Board Finish, Thistle Multi-Finish or Thistle Durafinish plaster.

Standard and certification
Conforms to *EN 13950.*

Thermal conductivity
λ WallBoard – 0.19W/mK. λ TriLine mineral wool – 0.033W/mK.

Gyproc ThermaLine BASIC

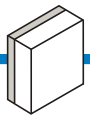

Width mm	Length mm	Edge type
22mm board	KG = 6.5	R = 0.35
1200	2400	T/E
30mm board	KG = 7.2	R = 0.55
1200	2400	T/E
40mm board	KG = 8.1	R = 0.80
1200	2400	T/E

Characteristics
Gyproc WallBoard factory-bonded to an expanded polystyrene insulant that is both CFC and HCFC-free, meaning zero ODP (Ozone Depletion Potential), and less than 5 GWP (Global Warming Potential).

Application
Can be used in both refurbishment and new-build where a basic level of additional thermal insulation is required.

Board colour
- Faced with ivory coloured Gyproc WallBoard.
- Backed with white coloured expanded polystyrene.

Board printing
Face - screw centre markings 'x'.
Edge - product code, EAN number, board thickness x width x length, edge type.

Finishing
T/E - with Gyproc jointing materials for taped and filled joints or application of Thistle Board Finish, Thistle Multi-Finish or Thistle Durafinish plaster.

Standard and certification
Conforms to *EN 13950.*

Thermal conductivity
λ WallBoard – 0.19W/mK. λ BASIC expanded polystyrene – 0.040W/mK.

Always use genuine branded British Gypsum components to qualify for **SpecSure®** lifetime warranty

Gyproc ThermaLine PLUS

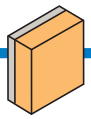

Width mm	Length mm	Edge type	KG	R
27mm board			= 6.5	= 0.62
1200	2400	T/E		
35mm board			= 7.2	= 0.89
1200	2400	T/E		
40mm board			= 7.7	= 1.05
1200	2400	T/E		
48mm board[1]			= 8.1	= 1.23
1200	2400	T/E		

[1] Faced with 12.5mm Gyproc WallBoard.

Characteristics
Gyproc WallBoard factory-bonded to an extruded polystyrene insulant that is both CFC and HCFC-free, meaning zero ODP (Ozone Depletion Potential), and less than 5 GWP (Global Warming Potential). The closed cell structure of the foam provides integral vapour control.

Application
Suitable for new buildings and for upgrading existing buildings where mid to high thermal performance is required.

Board colour
- Faced with ivory coloured Gyproc WallBoard.
- Backed with pink coloured extruded polystyrene.

Board printing
Face - screw centre markings 'x'.
Edge - product code, EAN number, board thickness x width x length, edge type.

Finishing
T/E - with Gyproc jointing materials for taped and filled joints or application of Thistle Board Finish, Thistle Multi-Finish or Thistle Durafinish plaster.

Standard and certification
Conforms to *EN 13950*.

Thermal conductivity
λ WallBoard – 0.19W/mK. λ PLUS extruded polystyrene – 0.030W/mK.

Gyproc ThermaLine SUPER

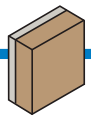

Width mm	Length mm	Edge type	KG	R
30mm board			= 6.3	= 0.93
1200	2400	T/E		
40mm board			= 6.4	= 1.49
1200	2400	T/E		
50mm board			= 6.5	= 1.97
1200	2400	T/E		
60mm board			= 6.6	= 2.56
1200	2400	T/E		
70mm board			= 6.7	= 3.06
1200	2400	T/E		
80mm board			= 6.8	= 3.56
1200	2400	T/E		
90mm board			= 6.9	= 4.06
1200	2400	T/E		

Characteristics
Gyproc WallBoard factory-bonded to CFC-free, high thermal performance phenolic foam insulant, meaning zero ODP (Ozone Depletion Potential), and with a GWP (Global Warming Potential) of 3. Has good fire performance, with Class 0 rating to both faces. Also has low toxicity and smoke obscuration of less than 5%. Includes a vapour control layer as standard to reduce risk of condensation.

Application
A very high performing, yet cost-effective, thermal laminate used for refurbishment and room-in-the-roof applications where a substantial upgrade in thermal insulation is required.

Board colour
- Faced with ivory coloured Gyproc WallBoard.
- Backed with brown coloured phenolic foam.

Board printing
Face - screw centre markings 'x'.
Edge - product code, EAN number, board thickness x width x length, edge type.

Finishing
T/E - with Gyproc jointing materials for taped and filled joints or application of Thistle Board Finish, Thistle Multi-Finish or Thistle Durafinish plaster.

Standard and certification
Conforms to *EN 13950*.

Thermal conductivity
λ WallBoard – 0.19W/mK. λ SUPER phenolic foam – 0.020W/mK - 0.023W/mK.

Always use genuine branded British Gypsum components to qualify for **SpecSure®** lifetime warranty

British Gypsum specialist boards

Glasroc F FIRECASE

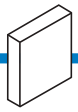

Width mm	Length mm	Edge type
15mm board	KG = 12.8	R = 0.05
1200	2400	S/E
20mm board	KG = 17.0	R = 0.07
1200	2000	S/E
25mm board	KG = 21.3	R = 0.08
1200	2000	S/E
30mm board	KG = 25.5	R = 0.10
1200	2000	S/E

Characteristics
High performance, Class 0, non-combustible glass fibre reinforced gypsum board.

Application
Used predominantly as part of the British Gypsum **FireCase** structural steel encasement system, giving up to 120 minutes fire protection. Also used in the **GypLyner ENCASE** system, achieving up to 180 minutes fire protection.

Board colour
☐ - White gypsum face.
☐ - White gypsum reverse side.

Board printing
Face - none.
Edge - none.
Reverse - board thickness, product name.

Finishing
S/E - with exceptionally smooth surface for direct decoration or application of Thistle Board Finish, Thistle Multi-Finish or Thistle Durafinish plaster.

Standard and certification
BBA approved (No 93/2935).
Conforms to *EN 15283-1 Types GM-F and H2.*

Thermal conductivity
λ 0.30W/mK.

Glasroc F MULTIBOARD

Width mm	Length mm	Edge type
6mm board	KG = 6.0	R = 0.02
1200	2400	S/E
	3000	S/E
10mm board	KG = 8.5	R = 0.03
1200	2400	S/E
	3000	S/E
12.5mm board	KG = 10.6	R = 0.04
1200	2400	S/E
	3000	S/E

Characteristics
Highly versatile, Class 0, non-combustible glass-reinforced gypsum board.

Application
Suitable for constructing all forms of partition and ceilings, including curved applications, giving high levels of fire and impact protection. Also offers increased levels of moisture performance. Can be used in semi-exposed situations such as eaves, canopies and carport under-linings.

Board colour
☐ - White gypsum face.
☐ - White gypsum reverse side.

Board printing
Face - none.
Edge - none.
Reverse - board thickness, product name.

Finishing
S/E - the exceptionally smooth surface enables Glasroc F MULTIBOARD to be left unfinished or can be painted or papered directly. Alternatively finish with Gyproc jointing materials for taped and filled joints or application of Thistle Board Finish, Thistle Multi-Finish or Thistle Durafinish plaster.

Standard and certification
Conforms to *EN 15283-1 Types GM-F (6mm GM-F and H1).*

Thermal conductivity
λ 0.30W/mK.

British Gypsum specialist boards

Glasroc F SOFFITLINE

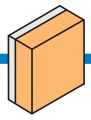

Characteristics
Manufactured from 6mm Glasroc F MULTIBOARD with a foil-backed CFC and HCFC-free phenolic foam and integral vapour control layer, meaning zero ODP (Ozone Depletion Potential), and a GWP (Global Warming Potential) of 3.

Application
Provides a high performance and durable lining for semi-exposed soffits that limits heat loss from the building above (e.g. used in basement car parks).

Board colour
- Faced with Glasroc F MULTIBOARD.
- Backed with orange coloured phenolic foam and metalised polyester film.

Board printing
Face - none.
Edge - none.
Reverse - none.

Finishing
S/E - with exceptionally smooth finished surface.

Thermal conductivity
- Glasroc F MULTIBOARD – 0.30W/mK.
- Phenolic foam – ranging from 0.020W/mK to 0.023W/mK (depending on thickness of foam).

Width mm	Length mm	Edge type
26mm board	KG = 7.0	R = 0.89
1200	2400	S/E
36mm board	KG = 7.5	R = 1.45
1200	2400	S/E
46mm board	KG = 8.0	R = 1.92
1200	2400	S/E
56mm board	KG = 8.5	R = 2.52
1200	2400	S/E
66mm board	KG = 9.0	R = 3.02
1200	2400	S/E
76mm board	KG = 9.5	R = 3.52
1200	2400	S/E
86mm board	KG = 10.0	R = 4.02
1200	2400	S/E

Glasroc F FLAMELINE

Characteristics
High performance, Class 0, non-combustible glass fibre reinforced gypsum board.

Application
For use in the British Gypsum **FlameLyner** system, giving up to 120 minutes fire resistance.

Board colour
- White gypsum face.
- White gypsum reverse side.

Board printing
Face - none.
Edge - none.
Reverse - board thickness, product name.

Finishing
S/E - with exceptionally smooth finished surface.

Thermal conductivity
- 0.30W/mK.

Width mm	Length mm	Edge type
6mm board	KG = 6.0	R = 0.02
600	2400	S/E
10mm board	KG = 8.5	R = 0.03
600	2400	S/E

Rigidur H

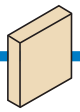

Width mm	Length mm	Edge type
12.5mm board	KG = 15.0	R = 0.06
1200	2400	T/E
	2800	T/E
	3000	T/E
15mm board	KG = 18.0	R = 0.07
1200	2400	T/E
	2800	T/E
	3000	T/E

Characteristics

Rigidur H is a gypsum fibreboard which combines gypsum, cellulose fibres from recycled paper, and water, to form a dense sheet material that has superior rigidity, durability and mechanical strength.

Application

Rigidur H is the outer board component in GypWall EXTREME, offering a British Gypsum system with increased rigidity and durability.

Board colour

- Beige face.
- Beige reverse side.

Board printing

Face - none.
Edge - none.
Reverse - product name, board thickness and standards.

Finishing

T/E - with Gyproc jointing materials for taped and filled joints or application of Thistle Board Finish, Thistle Multi-Finish or Thistle Durafinish plaster.

Standard and certification

Conforms to *EN 15283-2 Types GF.*

Thermal conductivity

λ 0.21W/mK.

Products - Fixings

This section includes updated information, added since it was first published in July 2009. Please see the WHITE BOOK update document for details.
Last updated 05/07/2010

Main image: Coventry Football Club,
Insets: British Gypsum Product Training Centre, East Leake

Gyproc, Gypframe and specialist board fixing products

The British Gypsum range of fixing products cater for drywall applications, from simple yet secure fixing of plasterboard linings to expansion anchors and sophisticated bonded anchor systems for demanding heavyweight fixing applications.

The Gyproc fixings range includes screws engineered for board-to-metal, board-to-timber or metal-to-metal fixing; high performance screws for use with the **FireCase** encasement system, and special Gypframe fixings for ceiling, lining and floor systems.

Gyproc fixings are designed to deliver optimum performance for all British Gypsum systems, and must be specified to ensure compliance with the **SpecSure®** lifetime system warranty.

Fixings index

Gyproc fixing products

Gyproc Drywall Screws	523
Gyproc Collated Drywall Screws	523
Gyproc Drywall Timber Screws	524
Gyproc Collated Drywall Timber Screws	524
Gyproc Jack-Point Screws	524
Gyproc Wafer Head Drywall Screws	524
Gyproc Wafer Head Jack-Point Screws	525
Gyproc Nailable Plugs	525

Specialist board fixing products

Glasroc F FIRECASE Screws	525
Rigidur Screws	525

Gypframe fixing products

Gypframe MF11 Nut and Bolt	526
Gypframe GL11 GypLyner Anchors	526
Gypframe SIF5 Floor Screws	526

Gyproc Drywall Screws

Characteristics
Corrosion resistant self-tapping zinc plated steel screws with countersunk cross-heads. Supplied with screwdriver bits.

Application
Ideal for fixing boards to Gypframe metal framing less than 0.8mm thick ('I' studs less than 0.6mm thick).

The length of screw selected for a given boarding configuration should be sufficient to give a nominal 10mm penetration into Gypframe metal.

Length mm
22
25
32
36
42
50
60
75
90

Gyproc Collated Drywall Screws

Characteristics
Corrosion resistant self-tapping zinc plated steel screws with countersunk cross-heads, for use with collated drywall screwdrivers. Strips of 50 Collated Drywall Screws supplied in boxes of 1000 screws (20 strips).

Application
Ideal for fixing boards to Gypframe metal framing less than 0.8mm thick ('I' studs less than 0.6mm thick).

The length of screw selected for a given boarding configuration should be sufficient to give a nominal 10mm penetration into Gypframe metal.

Length mm
25
36
42
50

Gyproc fixing products

Gyproc Drywall Timber Screws

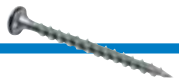

Characteristics
Corrosion resistant self-tapping zinc plated steel screws with countersunk cross-heads. Supplied with screwdriver bits.

Application
Ideal for fixing plasterboards to timber framing. The length of screw selected for a given boarding configuration should be sufficient to give a nominal 25mm penetration into timber framing.

Length mm
32
38
41
51
60

Gyproc Collated Drywall Timber Screws

Characteristics
Corrosion resistant self-tapping zinc plated steel screws with countersunk cross-heads, for use with collated drywall screwdrivers. Strips of 50 Collated Drywall Timber Screws supplied in boxes of 1000 screws (20 strips).

Application
Ideal for fixing plasterboards to timber framing. The length of screw selected for a given boarding configuration should be sufficient to give a nominal 25mm penetration into timber framing.

Length mm
38
41
51

Gyproc Jack-Point Screws

Characteristics
Corrosion resistant, self-tapping zinc plated steel screws with countersunk cross-heads. The length of the screw selected for a given boarding configuration should be sufficient to give a nominal 10mm penetration into steel framing. Supplied with screwdriver bits.

Application
Ideal for fixing boards to Gypframe metal framing 0.8mm thick or greater ('I' studs 0.6mm thick and greater).

Length mm
25
35
41
60

Gyproc Wafer Head Drywall Screws

Characteristics
Corrosion resistant self-tapping zinc plated steel screws with wafer cross-head. Supplied with screwdriver bits.

Application
Ideal for Gypframe metal-to-metal fixing less than 0.8mm thick ('I' studs less than 0.6mm thick).

Length mm
13

Always use genuine branded British Gypsum components to qualify for **SpecSure®** lifetime warranty

Gyproc fixing products

Gyproc Wafer Head Jack-Point Screws

Characteristics
Similar to Gyproc Wafer Head Screws, but with self-drilling points. Supplied with screwdriver bits.

Application
Ideal for Gypframe metal-to-metal fixing 0.8mm thick or greater ('I' studs 0.6mm thick and greater).

Length mm
13

Gyproc Nailable Plugs

Characteristics
A combination of masonry nail and plastic wall fixing with expanding tip and countersunk head.

Application
Designed for secondary fixing of Gyproc ThermaLine laminates to masonry backgrounds.

Length mm
60
80
110

British Gypsum specialist board fixing products

Glasroc F FIRECASE Screws

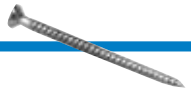

Characteristics
The screws have a unique head design that countersinks itself into the board allowing easy fixing.

Application
Specifically designed for the fixing of Glasroc F FIRECASE specialist board in the FireCase system.

Length mm
40
50
58
70

Rigidur Screws

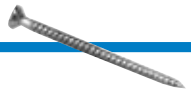

Characteristics
The screws have a unique head design that countersinks itself into the board allowing easy fixing.

Application
Specifically designed for the fixing of Rigidur H specialist board in the GypWall EXTREME system.

Length mm
30
40

Gypframe MF11 Nut and Bolt

Characteristics
Designed for securing Gypframe MF8 Strap Hanger to Gypframe MF12 Soffit Cleat.

Application
For use in the CasoLine MF ceiling system.

6 x 12mm bolt

Gypframe GL11 GypLyner Anchors

Characteristics
Hammer-in fixing with wide flange to avoid the need for a separate washer.

Application
Designed for fixing Gypframe GL2 or GL9 Brackets to masonry walls and concrete soffits.

Length mm
40

Gypframe SIF5 Floor Screws

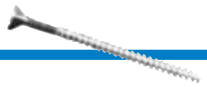

Characteristics
Electro-zinc plated, self-drilling and tapping screws with countersunk heads.

Application
For use in the GypFloor SILENT acoustic floor system. Suitable for fixing timber flooring through Gyproc Plank into Gypframe SIF Floor Channel.

Length mm
55

Always use genuine branded British Gypsum components to qualify for **SpecSure**® lifetime warranty

Always use genuine branded British Gypsum components to qualify for **SpecSure®** lifetime warranty

Products - Plasterboard accessories

This section includes updated information, added since it was first published in July 2009. Please see the WHITE BOOK update document for details.
Last updated 21/01/2011

Curve, Leicester

Gyproc plasterboard accessories

The Gyproc range of accessories includes everything you need to finish plasterboard linings and partitions ready for decoration.

Every stage is catered for, from Gyproc Dri-Wall Adhesive for simple and quick board fixing, through reinforcement tapes and jointing compounds for perfect plasterboard joints, angles and arches, to Gyproc Primer and Gyproc Sealer. There is also a range of products to cater for expansion, fire resistance and acoustic sealing - all designed to provide exactly the level of quality and performance required as part of an integrated British Gypsum system covered by the SpecSure® lifetime system warranty.

Gyproc plasterboard accessories index

Gyproc jointing materials

Gyproc Joint Filler 529
Gyproc Joint Cement 529
Gyproc ProMix LITE Joint Cement 530
Gyproc Ready Mix Joint Cement 530
Gyproc Easi-Fill 530
Gyproc Easi-Fill 45 530

Gyproc miscellaneous accessories

Gyproc FireStrip 531
Gyproc Dri-Wall Adhesive 531
Gyproc Soundcoat Plus 531
Gyproc Drywall Primer 531
Gyproc Drywall Sealer 532
Gyproc Sealant 532
Gyproc Corner Tape 532
Gyproc Joint Tape 532

Gyproc beads

Gyproc No-Coat Ultraflex 325 533
Gyproc No-Coat Ultratrim L 533
Gyproc Drywall Metal Angle Bead 533
Gyproc Drywall Archbead 533
Gyproc Drywall Metal Edge Bead 533
Gyproc Drywall Plastic Edge Bead 534
Gyproc Control Joint 534

Gyproc Joint Filler

12.5kg bags

Characteristics
A gypsum based setting material for bulk and secondary filling of plasterboard joints. A low shrinkage product for hand application with 90 minutes working time.

Application
Used in the traditional three stage jointing process.

Standard and certification
Conforms to EN 13963.

Gyproc Joint Cement

22.5kg bags

Characteristics
An air-drying, powdered jointing material.

Application
Used in the traditional three stage jointing process. Designed for the finishing stage over Gyproc Joint Filler in hand jointing, or for all application stages with mechanical jointing tools.

Standard and certification
Conforms to EN 13963.

Gyproc jointing materials

Gyproc ProMix LITE Joint Cement

17 litre tubs

Characteristics
A lightweight ready-mixed jointing material for the finishing stage over Gyproc Joint Filler or for all stages with mechanical jointing tools. Also compatible with most airless spraying equipment. Provides excellent workability, very low shrinkage and easy sanding.

Application
Used in the traditional three stage jointing process.

Standard and certification
Conforms to EN 13963.

Gyproc Ready Mix Joint Cement

12 litre tubs

Characteristics
An air-drying, ready-mixed jointing material.

Application
Used in the traditional three stage jointing process. Designed for the finishing stage over Gyproc Joint Filler in hand jointing, or for all application stages with mechanical jointing.

Standard and certification
Conforms to EN 13963.

Gyproc Easi-Fill

10kg bags

Characteristics
A combined setting and air-drying gypsum based material for bulk filling and finishing of joints. High coverage rate and minimal drying shrinkage allows application in only two coats. Easy to mix, apply and sand, with 90 minutes working time and the second (final) coat can be applied after 120 minutes.

Application
Used in the two stage method of plasterboard jointing.

Standard and certification
Conforms to EN 13963.

Gyproc Easi-Fill 45

10kg bags

Characteristics
A combined setting and air-drying gypsum based material for bulk filling and finishing of joints. High coverage rate and minimal drying shrinkage allows application in only two coats. Easy to mix, apply and sand, with 45 minutes working time and the second (final) coat can be applied after 70 minutes.

Application
Used in the two stage method of plasterboard jointing.

Standard and certification
Conforms to EN 13963.

Always use genuine branded British Gypsum components to qualify for **SpecSure®** lifetime warranty

Gyproc miscellaneous accessories

Gyproc FireStrip

Length mm
3600

Characteristics
A soft extruded linear intumescent gap sealer, to maintain fire resistance.

Application
Designed to be used with British Gypsum **GypWall** metal framed systems as part of the deflection head detail.

Gyproc Dri-Wall Adhesive

25kg bags

Characteristics
A general purpose gypsum-based adhesive.

Application
For use in British Gypsum **DriLyner** systems, on high, medium or low suction backgrounds.

Standard and certification
Conforms to *EN 14496*.

Gyproc Soundcoat Plus

25kg bags

Characteristics
A gypsum-based parge coat material.

Application
Designed for application to masonry party and external walls, prior to drylining, to improve acoustic and thermal performance by sealing air paths (either through cracks or block permeability).

Used in Robust Detail wall constructions E-WM-3, E-WM-4, E-WM-5, E-WM-6, E-WM-10, E-WM-11, E-WM-12, E-WM-13 and E-WM-16.

Standard and certification
Conforms to EN13279-1.

Gyproc Drywall Primer

10 litre tubs

Characteristics
A general purpose plasterboard primer.

Application
Provides an ideal surface for decoration with most paints and wall coverings. For brush or roller application.

Gyproc miscellaneous accessories

Gyproc Drywall Sealer

10 litre tubs

Characteristics
A specially formulated sealer that provides vapour control and a superior, durable finish when applied in two coats.

Application
Suitable for decoration with paints and most wall coverings. A single coat protects the board surface from subsequent steam stripping. For brush or roller application.

Gyproc Sealant

0.38 litre cartridge

0.93 litre cartridge

Characteristics
An acrylic sealant and adhesive.

Application
Used for sealing air gaps in British Gypsum systems to maintain optimum acoustic performance. Also used for fixing Gyproc plasterboards in the British Gypsum DriLyner RF system, and Gyproc ThermaLine laminates in the British Gypsum DriLyner MF system.

Gyproc Corner Tape

33 metre rolls

Characteristics
Paper joint tape bonded to two corrosion resistant metal strips, for manual application only. Supplied in a cardboard dispenser.

Application
For reinforcing external angles in plasterboard construction. Also ideal for internal or external angles that are not 90°.

Gyproc Joint Tape

150 metre rolls

Characteristics
Paper tape with centre crease, chamfered edges and spark perforations, for easy use in internal angle joints. Provides excellent crack resistance.

Application
Designed for reinforcing flat joints and internal angles in both manual and Gyproc Speed Tape mechanical jointing systems. Also used for joint reinforcing plaster finishes to plasterboard.

Standard and certification
Conforms to EN 13963.

Always use genuine branded British Gypsum components to qualify for **SpecSure**® lifetime warranty

Gyproc beads

Gyproc No-Coat

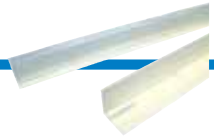

Characteristics
A range of high-performance corner reinforcement products for jointed systems.

Application
Ultraflex 325 adjusts to any angle of both internal and external corners, and is supplied on a roll, therefore eliminating waste.

Ultratrim L forms crisp, straight lines to board edges - ideal for trimming ceiling lines and at door / window jambs.

	Length
Ultraflex 325	
41 x 41mm	30m
Ultratrim L	
14 x 45mm	3050mm

Gyproc Drywall Metal Angle Bead

Characteristics
Perforated galvanised metal bead.

Application
For reinforcing external 90° angles.

	Length
25mm x 25mm	
	2400mm or 3000mm

Gyproc Drywall Archbead

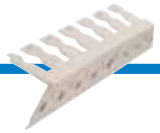

Characteristics
Extruded uPVC profile with equal 25mm legs.

Application
The special design allows for curving around arches and reveals down to 250mm minimum radius.

	Length
25mm x 25mm	
	3000mm

Gyproc Drywall Metal Edge Bead

Characteristics
Galvanised steel channel. Asymmetric profile with one perforated leg and pre-formed arris to accommodate jointing material.

Application
Used to protect exposed plasterboard edges and form a defined edge to plasterboard area.

	Length
12.5mm	
	2400mm or 3000mm
15mm	
	3000mm

Gyproc beads

Gyproc Drywall Plastic Edge Bead

Characteristics
Extruded uPVC channel. Asymmetric profile with one perforated leg and pre-formed arris to accommodate jointing material.

Application
Used to protect exposed plasterboard edges and form a defined edge to plasterboard area.

	Length
12.5mm	
	3000mm

Gyproc Control Joint

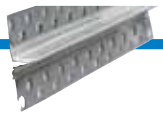

Characteristics
Pre-formed galvanised metal strip.

Application
Used to form joints in drywall systems to accommodate expansion or contraction of up to 7mm.

	Length
47mm	
	3048mm

Always use genuine branded British Gypsum components to qualify for **SpecSure**® lifetime warranty

Products - Plasters and plaster accessories

This section includes updated information, added since it was first published in July 2009. Please see the WHITE BOOK update document for details.
Last updated 05/07/2010

Beaumont Leys School, Leicester

Thistle plasters and plaster accessories

The UK's leading range of undercoat, finish coat, one-coat and speciality plasters provides durable, high quality internal linings for all common backgrounds and building types.

Combining reliable, controlled workability for the plasterer, with **SpecSure®** lifetime warranted performance for the specifier and client, the Thistle range includes premium quality bonding agents, beads and tapes - everything needed for a perfect finish, every time.

Plaster and plaster accessories product index

Thistle beads for solid plastering

Thistle Plaster Angle Bead	538
Thistle Plaster Stop Bead	538

Thistle beads for skimming

Thistle Thin Coat Angle Bead	538
Thistle Thin Coat Plaster Stop Bead	538
Thistle Thin Coat Mini Mesh Bead	538

Thistle plaster bonding agents

ThistleBond-it	538
Thistle GypPrime	538

Thistle fibre tapes

Thistle ProTape FT50	539
Thistle ProTape FT100	539

Thistle undercoat plasters

Thistle Bonding Coat	539
Thistle Hardwall	539
Thistle Tough Coat	539
Thistle Browning	539
Thistle Dri-Coat	539
Thistle X-Ray	539

Thistle finish coat plasters

Thistle Board Finish	540
Thistle Multi-Finish	540
Thistle Durafinish	540

Thistle one coat plasters

Thistle Universal One Coat	540
Thistle Projection	540

Always use genuine branded British Gypsum components to qualify for **SpecSure®** lifetime warranty

Thistle beads for solid plastering

	Depth mm	Length mm
Thistle Plaster Angle Bead		
A galvanised steel bead with expanded wings for reinforcing external angles.		2400
		3000
Standard and certification *Conforms to EN 13658-1.*		
Thistle Plaster Stop Bead		
A galvanised steel bead with expanded wings for finishing and reinforcing plaster edges.	10	2400
		3000
Standard and certification *Conforms to EN 13658-1.*	13	2400
		3000

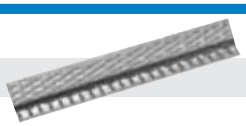

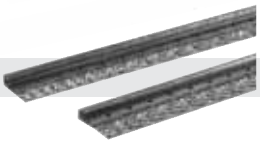

Thistle beads for skimming

	Depth mm	Length mm
Thistle Thin Coat Angle Bead		
A galvanised steel 'thin coat' bead with perforated, 30mm wide wings. For reinforcing external angles in 2mm plaster finishes.		2400
		3000
Standard and certification *Conforms to EN 13658-1.*		
Thistle Thin Coat Plaster Stop Bead		
A galvanised steel bead with perforated wings for finishing and reinforcing edges of thin coat plaster.	3	2400
		3000
Standard and certification *Conforms to EN 13658-1.*		
Thistle Thin Coat Mini Mesh Bead		
A galvanised steel bead with mesh wings, which provides excellent key for thin coat plaster corners.		2400
		3000
Standard and certification *Conforms to EN 13658-1.*		

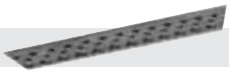

Thistle plaster bonding agents

ThistleBond-it	**10 litre tubs**
Bonding agent for pre-treatment of smooth backgrounds.	
Thistle GypPrime	**11 litre tubs**
Suction control primer for high suction backgrounds.	

Always use genuine branded British Gypsum components to qualify for **SpecSure**® lifetime warranty

Thistle fibre tapes

Self-adhesive glass fibre mesh tapes for joint and repair reinforcement.

	Width mm	Roll length m
Thistle ProTape FT50	50	90
Thistle ProTape FT100	100	45

Thistle undercoat plasters[1]

	Approx. coverage m²/1000kg	Approx. setting time hours	Shelf life months
Thistle Bonding Coat	**100 - 115[2]**	**1½ - 2**	**4**
For low suction backgrounds, e.g. concrete, plasterboard or surfaces treated with bonding agents. **Standard and certification** *Conforms to EN13279-1.*			
Thistle Hardwall	**115 - 130[2]**	**1½ - 2**	**4**
High impact resistance and quicker drying surface. Suitable for application by hand or mechanical plastering machine to most masonry backgrounds. **Standard and certification** *Conforms to EN13279-1.*			
Thistle Tough Coat	**135 - 150[2]**	**1½ - 2**	**4**
High coverage, good impact resistance. Suitable for application by hand or mechanical plastering machine to most masonry backgrounds. **Standard and certification** *Conforms to EN13279-1.*			
Thistle Browning	**135 - 155[2]**	**1½ - 2**	**4**
For solid backgrounds of moderate suction with an adequate mechanical key. **Standard and certification** *Conforms to EN13279-1.*			
Thistle Dri-Coat	**125 - 135[2]**	**N/A**	**6**
Cement based, for replastering after installation of a damp-proof course.			
Thistle X-Ray	**40 - 45[2]**	**1½ - 2**	**4**
Giving protection from x-rays in medical and dental installations. **Standard and certification** *Conforms to EN13279-1.*			

[1] Nominal bag weight 25kg.
[2] Coverage based on 11mm thickness for undercoat plasters.

Always use genuine branded British Gypsum components to qualify for **SpecSure®** lifetime warranty

Thistle finish coat plasters[1]

	Approx. coverage m²/1000kg	Approx. setting time hours	Shelf life months
Thistle Board Finish	410 - 430[2]	1½	4
For low-medium suction backgrounds, e.g. plasterboards, Thistle Dri-Coat. **Standard and certification** *Conforms to EN13279-1.*			
Thistle Multi-Finish	410 - 430[2]	1½	4
For use over both undercoats and plasterboard. **Standard and certification** *Conforms to EN13279-1.*			
Thistle Durafinish	410 - 430[2]	1½	4
For increased resistance to accidental damage. **Standard and certification** *Conforms to EN13279-1.*			

Thistle one coat plasters[1]

	Approx. coverage m²/1000kg	Approx. setting time hours	Shelf life months
Thistle Universal One Coat	85 - 95[2]	1½ - 2	4
For a variety of backgrounds. Suitable for application by hand or mechanical plastering machine. **Standard and certification** *Conforms to EN13279-1.*			
Thistle Projection	75 - 85	1½ - 2	4
For application by a mechanical plastering machine. **Standard and certification** *Conforms to EN13279-1.*			

[1] Nominal bag weight 25kg.
[2] Coverage based on 2mm thickness for finish coat plasters, 13mm thickness for one coat plasters.

Always use genuine branded British Gypsum components to qualify for **SpecSure**® lifetime warranty

Products - Decorative

This section includes updated information, added since it was first published in July 2009. Please see the WHITE BOOK update document for details.
Last updated 05/07/2010

Barratt Homes,
Lytham St. Annes

Gyproc decorative products

Gyproc decorative products are designed to add the finishing touch to any room, whether you are building from new, refurbishing or simply updating the decoration.

With the ever-popular Gyproc Cove or Cornice to stylise and soften wall / ceiling junctions, and Gyproc Styletrims to create interesting and imaginative design effects to plasterboard linings, dull and uninteresting rooms need never again be a problem for the building designer.

Decorative products index

Gyproc Cove, Cornice and Styletrim products

Gyproc Cove	544
Gyproc Cornice	544
Gyproc Cornice Strips	544
Gyproc Cornice Battens	544
Gyproc Cove Adhesive	544
Gyproc Styletrims	545

Decorative products

Gyproc Cove

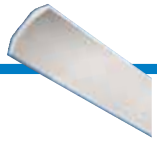

Characteristics
Gypsum plasterboard moulding in traditional cove profile. Facetted back for easier location. Paper lined sections.

Application
Usually installed between the wall and ceiling angle to add decorative effect, Gyproc Cove 100 is ideal for most domestic applications, and Gyproc Cove 127 is suitable for larger rooms and commercial applications.

Standard and certification
Conforms to EN14209.

Product	Facing paper	Length mm
100	White	3000
127	Ivory	3000
		3600
		4200

'C' shape profile

Gyproc Cornice

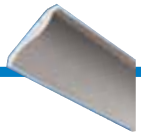

Characteristics
Gypsum plasterboard moulding in classic 's' profile. Paper lined section.

Application
Gives a high quality look to any room, especially when used in conjunction with Gyproc Cornice Strips.

Standard and certification
Conforms to EN14209.

Product	Facing paper	Length mm
135	White	3000

'S' shape profile

Gyproc Cornice Strips

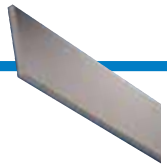

Characteristics
Pre-cut strips of glass reinforced gypsum board.

Application
Enhances Gyproc Cove and Cornice installations to give more ornate effects.

Thickness mm	Width mm	Length mm
12.5	100	2400

Gyproc Cove with one Gyproc Cornice Strip on ceiling and wall.

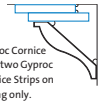
Gyproc Cornice with two Gyproc Cornice Strips on ceiling only.

Gyproc Cornice Battens

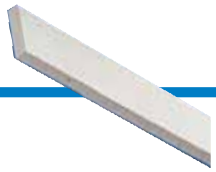

Characteristics
Pre-cut strips of glass reinforced gypsum board.

Application
Allows the installation of Gyproc Cornice over an existing profile without the need for time consuming removal of the old cove moulding.

Thickness mm	Width mm	Length mm
10	25	1200

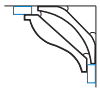

Gyproc Cove Adhesive

Characteristics
Gypsum based adhesive specially formulated for good 'grab' and adhesion.

Application
Fixing of Gyproc Cove and Cornice products to most backgrounds, and filling of mitred joints.

Nominal bag weight kg
5
12.5

Always use genuine branded British Gypsum components to qualify for **SpecSure**® lifetime warranty

Gyproc Styletrims

Gyproc Styletrims are primed, pre-formed aluminium trims which enable the designer to create interesting and imaginative architectural design effects with plasterboard.

	Depth mm	Width mm	Length mm
BGM105 Edge Reveal			
Used to create a 25mm wide x 10mm deep reveal around drylined wall perimeters, doors, glazing and skirting.	10	25	3000
BGM106 Edge Reveal			
Used to create a 12.5mm wide x 10mm deep reveal around drylined wall perimeters, doors, glazing and skirting.	10	12.5	3000
BGM119 Edge Stop			
Used to create a distinctive straight edge for reveals and other drylining features.	10		3000

Products - Access panels

This section includes updated information, added since it was first published in July 2009. Please see the WHITE BOOK update document for details.
Last updated 05/07/2010

Bluewater shopping centre, Dartford

Gyproc Profilex Access Panels

Gyproc Profilex Access Panels are purpose-designed for use in British Gypsum framed systems where there is a requirement to access services for maintenance purposes. Designs are also included for use in masonry backgrounds.

Regularly specified in commercial, industrial, public and residential buildings, they are available as wall or ceiling panels, in either standard or a choice of performance options, which are fully substantiated for use in 60 or 120 minute fire-rated constructions. They come in a range of standard sizes, with a choice of security locks and catches and in finishes to suit different applications.

Access panels index

Access panels - non fire-rated

Gyproc Profilex Standard Panel 548
Gyproc Profilex Sealed Panel 548
Gyproc Profilex Loft Hatch Panel 548
Gyproc Profilex Handi-Access Panel 549

Access panels - 60 minutes fire-rated

Gyproc Profilex FR1 Standard Panel 549
Gyproc Profilex FR1 Ceiling Panels 550

Access panels - 120 minutes fire-rated

Gyproc Profilex FR2 Performance Panel 550

Access panels locking and frame types

There are four standard locking types:

- Budget - basic lock operated by an 8mm square open drive, used on the majority of panels where low security locking is required.
- Tamper proof - used where a medium level of security is required. Needs a key to open but the key will open any tamper proof lock.
- 3-point - operates as budget lock but locks to the side and, by the use of shoot bolts, to the top and bottom of the frame. Used on 120 minute fire-rated access panels.
- Touch catch - operated by pushing the door near the touch catch, which then springs slightly open. Used on loft hatches.

There are three frame types:

- Beaded frame - used in new-build where board is taped and jointed, or skim finished. Panels are supplied etch primed in white for on-site paint decoration.
- Picture frame - used where supporting construction is already built. The frame is visible after installation. Panels are supplied gloss powder coated in white.
- Plaster frame - used where panels are installed in walls to be plastered (13mm overall two coat plaster). Panels are supplied etch primed in white for on-site paint decoration.

Beaded frame

Picture frame

Plaster frame

Access panels - non fire-rated

Gyproc Profilex Standard Panel

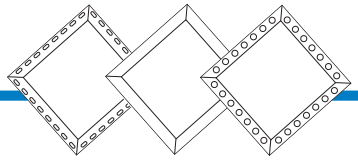

Characteristics
A non fire-rated panel manufactured in zinc coated mild steel and finished etch primer or powder coat white.

Application
For use in ceiling and wall constructions.

Panel size [1] mm	No of locks	Weight kg
Beaded frame with budget lock		
300 x 300	1	3
300 x 600	1	4
450 x 450	1	5
550 x 550[2]	1	6
550 x 900[2]	2	9
550 x 1200[2]	2	13
Picture frame with budget lock		
300 x 300	1	3
450 x 450	1	5
550 x 550[2]	1	6
Plaster frame with budget lock		
550 x 550[2]	1	6

Gyproc Profilex Sealed Panel

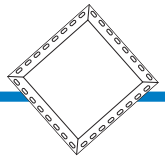

Characteristics
A flush metal faced panel manufactured in zinc coated mild steel and finished etch primer.

Application
For use in plasterboard walls and ceiling constructions, in areas of high humidity or dust free environments.

Panel size [1] mm	No of locks	Weight kg
Beaded frame with tamper proof lock		
450 x 450	1	6

Gyproc Profilex Loft Hatch Panel

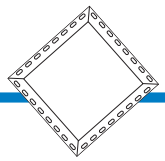

Characteristics
A concealed flush metal faced panel manufactured to accept ladders (by others) with no visible framing after installation. Finished in etch primer ready for decoration.

Application
For use in residential applications.

Panel size [1] mm	No of locks	Weight kg
Beaded frame with Loft Hatch Panel		
540 x 540	2	7
800 x 540	2	10

[1] The panel sizes are shown with the hinge side last, e.g. 550mm x 1200mm panel is 1200mm on hinge side.
[2] Where panels are manufactured 550mm x 550mm, this is to suit framing at 600mm centres.

Always use genuine branded British Gypsum components to qualify for **SpecSure®** lifetime warranty

Access panels - non fire-rated (continued)

Gyproc Profilex Handi-Access Panel

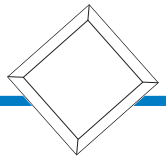

Characteristics

A plastic access panel.

Application

Used on plasterboard or other lined walls in a multitude of environments, where there is a need to access plumbing, valves, lighting devices, fuse boxes, vents and duct work.

Panel size [1] mm	No of locks	Weight kg
Picture frame		
150 x 235	0	1
300 x 300	0	1

Access panels - 60 minute fire-rated

Gyproc Profilex FR1 Standard Panel - Integrity only (both directions)

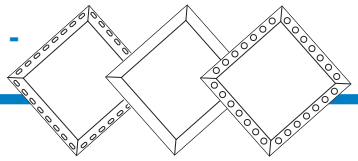

Characteristics

A 60 minute fire-rated flush metal faced panel manufactured in treated zinc coated steel and finished etch primer or powder coated white.

Application

For use in wall constructions.

Panel size [1] mm	No of locks	Weight kg
Beaded frame with budget lock		
300 x 300	1	4
300 x 600	1	7
450 x 450	1	8
550 x 550[2]	1	13
550 x 900[2]	2	20
550 x 1200[2]	2	26
Picture frame with budget lock		
550 x 550[2]	1	13
Plaster frame with budget lock		
550 x 550[2]	1	13

[1] The panel sizes are shown with the hinge side last, e.g. 550mm x 1200mm panel is 1200mm on hinge side.
[2] Where panels are manufactured 550mm x 550mm, this is to suit framing at 600mm centres.

Access panels - 60 minute fire-rated (continued)

Gyproc Profilex FR1 Ceiling Panel - Protection to steel beams

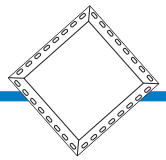

Characteristics

A 60 minute fire-rated panel manufactured in zinc coated mild steel and finished etch primer. Door faced with plasterboard and edged with beaded trim. The FR1 panel is equipped with a controlled action device to ensure safe operation.

Application

For use in ceiling constructions only.

Panel size [1] mm	No of locks	Weight kg
Plasterboard faced with beaded frame and budget lock		
300 x 300	1	4
450 x 450	1	8
600 x 300	1	7
600 x 600	1	13
600 x 900[3]	2	20
600 x 1200[3]	2	26

Gyproc Profilex FR1 Ceiling Panel - Integrity only

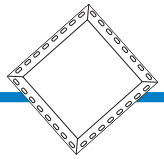

Characteristics

A 60 minute fire-rated flush metal faced panel, manufactured in treated zinc coated steel and finished in etch primer. The FR1 Ceiling Panel is equipped with a controlled action device to ensure safe operation.

Application

For use in ceiling constructions only.

Panel size [1] mm	No of locks	Weight kg
Flush metal faced with beaded frame and budget lock		
300 x 300	1	3
450 x 450	1	6
600 x 300	1	5
600 x 600	1	10
600 x 900	2	15
600 x 1200	2	20

Access panels - 120 minute fire-rated, integrity only from one side

Gyproc Profilex FR2 Performance Panel - Integrity only

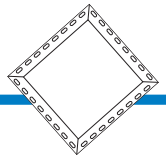

Characteristics

A 120 minute fire-rated flush metal faced panel manufactured in zinc coated mild steel and finished etch primer.

Application

For use in ShaftWall or wall lining systems.

Panel size [1] mm	No of locks	Weight kg
Beaded frame with 3 point lock		
550 x 550[2]	1	15

[1] The panel sizes are shown with the hinge side last, e.g. 550mm x 1200mm panel is 1200mm on hinge side.
[2] Where panels are manufactured 550mm x 550mm, this is to suit framing at 600mm centres.
[3] Non fire-rated.

Always use genuine branded British Gypsum components to qualify for **SpecSure**® lifetime warranty

Always use genuine branded British Gypsum components to qualify for **SpecSure®** lifetime warranty

Products - Ceilings

This section includes updated information, added since it was first published in July 2009. Please see the WHITE BOOK update document for details.
Last updated 05/07/2010

Copenhagen airport

British Gypsum ceiling products

British Gypsum's versatile range of ceiling systems combines aesthetic and acoustic performance with the unique environmental properties of gypsum.

The British Gypsum ceiling range includes lay-in grid tiles, planks and seamless boarded solutions, providing the following benefits:

- High acoustic performance across all frequencies.
- Aesthetics.
- Durability and low maintenance.
- SpecSure® lifetime warranty.
- High humidity tolerance.
- Optimum hygiene and cleanliness.
- Reaction to fire performance up to Class 0, A2-s1, d0.

Ceilings index

Gyprex tiles

SATINSPAR 554
BIO 554

Casoprano tiles

ROC 555
BIANCA 555
STAR 555
NOVA 555
VOICE 555
FORTE 555

Gyptone boards, tiles and planks

Boards

QUATTRO 41 556
QUATTRO 45 556
QUATTRO 46 556
QUATTRO 47 556
BASE Curve 556
LINE 7 Curve 556
LINE 6 556

Tiles and planks

BASE 31 557
BASE 33 Plank 557
LINE 4 557
LINE 8 Plank 557
POINT 11 557

Gyptone boards, tiles and planks

Tiles and planks (continued)

POINT 12 557
POINT 15 Plank 557
QUATTRO 20 557
QUATTRO 22 557
QUATTRO 55 Plank 558
SIXTO 558

CasoLine GRID ceiling components

CLT2401 Main 'T' 558
CLT24D101 Cross 'T' 558
CLT15P01 Main 'T' 558
CLT15P02 Main 'T' 558
CLWA01 Wall Angle 558
CLSM04 Shadowline Moulding 558
CLC02 Wall Spring Clip 558
CLC03 Perimeter Clip 558
E15 Casoprano Spacer Block 558
E24 Casoprano Spacer Block 558

Rigitone boards

8/18 559
10/23 559
15/30 559
12-20/66 559
8-15-20 559
8-15-20 SUPER 559

Always use genuine branded British Gypsum components to qualify for **SpecSure®** lifetime warranty

Edge details

British Gypsum's ceiling systems create a new flexibility in design and construction. The wide range of products give fresh and creative freedom for interior designers, enabling them to fully realise the visual and acoustic ambience of their designs. The products are available in seven edge profiles as shown below:

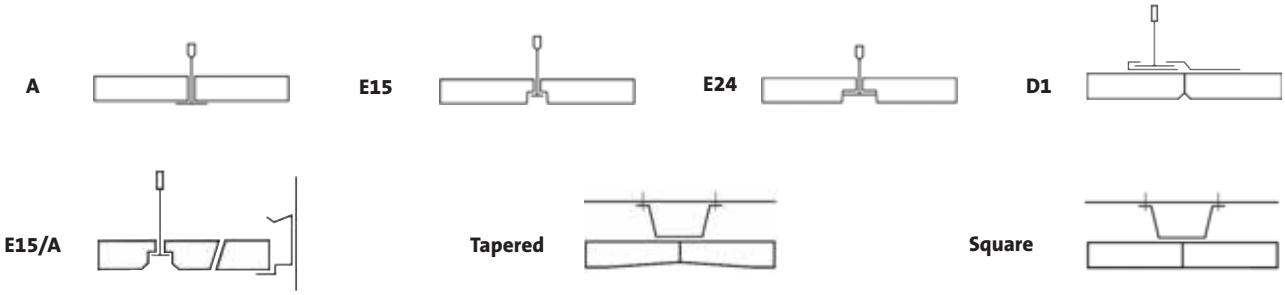

CasoLine GRID reference codes and abbreviations

CLT15P01			
CL = CasoLine	T = T section	15 = Dimension (mm)	P01 = Plank size

Gyprex

Gyprex vinyl faced ceiling tiles have been specially developed to provide the ideal solution for environments where hygiene and cleanliness are essential.

	Edge detail	Nominal size mm	Weight kg/m²
SATINSPAR			
Attractive smooth satin finish.	A	600 x 600 x 8	6.9
	A	1200 x 600 x 8	6.9
BIO			
Smooth white tile with integral biocide within the vinyl preventing the growth of fungi and bacteria, including MRSA, E.Coli 0.57 and Salmonella.	A	600 x 600 x 8	6.9

Technical performance

- Acoustic performance
  - D_{ncw} up to 37 dB
- Class 0 / Euroclass B-s1, d0
- Relative humidity 90%
- Biocide version
- Wipe-clean finish
- Thin and lightweight
- Easy to install
- Ideal solutions for HTM 08-01 and HTM 60

Casoprano

An adaptable range of pre-finished white lay-in grid acoustic ceiling tiles available in a choice of smooth, textured or perforated finishes, making them ideal for a variety of different aesthetic and acoustic requirements.

Casoprano is the only range to offer both sound absorbing and sound reflecting tiles with an identical visual appearance. Creating the ideal speech clarity solution is no longer a question of mixing solid (reflecting) and perforated (absorbing) tiles. Casoprano allows you to keep the desired aesthetic throughout and still achieve the required speech clarity, an important consideration for many environments, such as lecture theatres and classrooms.
RAL colour reference: 9016

ROC

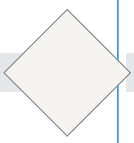

Smooth white tile, suitable for a wide range of buildings and achieves high levels of sound insulation.

Edge detail	Nominal size mm	Weight kg/m²
A	600 x 600 x 8	6.9
E24	600 x 600 x 9.5	7.9

BIANCA

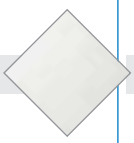

Fine granulated textured tile giving high levels of sound insulation.

A	600 x 600 x 8	6.9
E24	600 x 600 x 9.5	7.9

STAR

Lightly pinned surface pattern, giving an attractive yet subtle appearance with high levels of sound insulation.

A	600 x 600 x 8	6.9
E24	600 x 600 x 9.5	7.9

NOVA

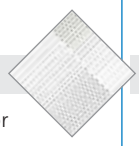

Graduated pattern, perforated with special acoustic tissue backing to give superior sound absorption.

A	600 x 600 x 8	6.5
E24	600 x 600 x 9.5	7.2

VOICE

Fissured pattern, perforated with special acoustic tissue backing to give superior sound absorption, used in conjunction with **FORTE** to give high levels of speech clarity.

E24	600 x 600 x 9.5	7.2

FORTE

Fissured, sound insulating tile used in conjunction with **VOICE** to achieve high levels of speech clarity.

A	600 x 600 x 8	6.9
E24	600 x 600 x 9.5	7.9

Technical performance

- Acoustic performance
  - α_w up to 0.60
  - NRC up to 0.65
  - D_{ncw} up to 47 dB
  - Class C and D absorbers
- Class 0 / Euroclass A2-s1, d0
- Relative humidity 90%
- Can be repainted

Gyptone boards

A choice of seven perforated and non-perforated designs, coupled with an integral sound absorbent tissue backing make Gyptone acoustic ceiling boards the natural choice for creating the ideal acoustic ceiling system.

	Edge detail	Nominal size mm	Weight kg/m²
QUATTRO 41			
Achieves high levels of sound absorption, classified as a Class C absorber satisfying Building Regulations Approved Document E. Perforated area 16%.	Tapered	2400 x 1200 x 12.5	8
QUATTRO 45			
Achieves high levels of sound absorption, classified as a Class C absorber satisfying Building Regulations Approved Document E. Perforated area 17%.	Tapered	2400 x 900 x 12	8
QUATTRO 46			
Comprises a perforated area of 10%, giving a good level of sound absorption performance.	Tapered	2400 x 1200 x 12.5	8
QUATTRO 47			
Comprises a perforated area of 6%, giving a good level of sound absorption performance.	Tapered	2400 x 1200 x 12.5	8
BASE Curve			
Used in conjunction with **LINE 7 Curve**	Tapered	2400 x 900 x 6.5	6
LINE 7 Curve			
A versatile board capable of being dry curved to a minimum radius of 1200mm. Perforated area 14%.	Tapered	2400 x 900 x 6.5	5
LINE 6			
Comprises a perforated area of 13%, giving a good level of sound absorption performance.	Tapered	2400 x 1200 x 12.5	8

Technical performance

- Acoustic performance
  - α_w up to 0.75
  - NRC up to 0.75
  - D_{ncw} up to 39 dB
  - Class C and D absorbers
- Class 0 / Euroclass A2-s1, d0
- Relative humidity 70%
- Ideal solution to Building Regulations Approved Document E and BB93
- Monolithic appearance
- Ceiling or wall lining
- Can be painted

Always use genuine branded British Gypsum components to qualify for **SpecSure®** lifetime warranty

Gyptone tiles and planks

A range of five attractive design types with an integral sound absorbent tissue backing make Gyptone suspended ceiling tiles and planks the natural choice for creating the ideal acoustic ceiling system. The range includes **BASE, SIXTO, LINE, POINT** and **QUATTRO.** Bespoke options for coloured tiles and planks are available to any NCS colour code. RAL colour reference: NCS 0500

	Edge detail	Nominal size mm	Weight kg/m²
BASE 31 Pre-finished white un-perforated tile. Used in conjunction with **SIXTO, LINE, QUATTRO** and **POINT** tiles to create distinctive ceiling designs.	A	600 x 600 x 12.5	9
	D1	600 x 600 x 12.5	9
	E15	600 x 600 x 12.5	9
BASE 33 Plank Pre-finished white un-perforated plank. Used in conjunction with **LINE, QUATTRO** and **POINT** planks to create distinctive ceiling designs. Planks are ideal for use in corridor areas.	E15/A	1800 x 300 x 12.5	9
	E15/A	2100 x 300 x 12.5	9
LINE 4 Pre-finished white tile with line perforations, backed by special sound absorbent tissue. Achieves high levels of sound absorption from an 18% perforated area.	E15	600 x 600 x 12.5	8
LINE 8 Plank Pre-finished white plank with line perforations, backed by special sound absorbent tissue. Achieves high levels of sound absorption from a 15% perforated area. Planks are ideal for use in corridor areas.	E15/A	1800 x 300 x 12.5	8
	E15/A	2100 x 300 x 12.5	8
POINT 11 Pre-finished white tile with round perforations, backed by special sound absorbent tissue. Achieves high levels of sound absorption from a 12% perforated area.	E15	600 x 600 x 12.5	8
POINT 12 Pre-finished white tile with round perforations, backed by special sound absorbent tissue. Used in conjunction with **POINT 11** tiles, the unperforated area allows the installation of services, such as lights, into the ceiling. Perforated area 5%.	E15	600 x 600 x 12.5	8
POINT 15 Plank Pre-finished white tile with round perforations, backed by special sound absorbent tissue. Suitable for use in corridors to provide sound absorption from the 11% perforated area.	E15/A	1800 x 300 x 12.5	8
	E15/A	2100 x 300 x 12.5	8
QUATTRO 20 Pre-finished white tile with square perforations, backed by special sound absorbent tissue. A perforated area of 18% provides high levels of sound absorption.	D1	600 x 600 x 12.5	8
	E15	600 x 600 x 12.5	8
QUATTRO 22 Pre-finished white tile with square perforations, backed by special sound absorbent tissue. Used in conjunction with **QUATTRO 20** tiles, the unperforated area allows the installation of services, such as lights, into the ceiling. Perforated area 9%.	D1	600 x 600 x 12.5	8
	E15	600 x 600 x 12.5	8

Always use genuine branded British Gypsum components to qualify for **SpecSure®** lifetime warranty

Gyptone tiles and planks (continued)

	Edge detail	Nominal size mm	Weight kg/m²
QUATTRO 55 Plank			
Pre-finished white plank with square perforations, backed by special sound absorbent tissue. Suitable for use in corridors to provide sound absorption from a 15% perforated area.	E15/A	1800 x 300 x 12.5	8
	E15/A	2100 x 300 x 12.5	8
SIXTO			
Pre-finished white tile with hexagonal perforations, backed by special sound absorbent tissue. Up to Class B sound absorption from a 17% open area.	E15	600 x 600 x 12.5	8

Technical performance

- Acoustic performance
  - α_w up to 0.85
  - NRC up to 0.80
  - D_{ncw} up to 39 dB
  - Class B, C and D absorbers
- Class 0 / Euroclass A2-s1, d0
- Relative humidity 70%
- Ideal solution to Building Regulations Approved Document E
- Removable for easy access
- Can be repainted

CasoLine GRID - ceiling components[1]

Lay-in butt-cut grid system with white exposed flanges, for use with Gyptone D1 edge tiles and Gyptone planks. All components conform to *EN 13964*. RAL colour reference: 9010

	Pack size - number of items	mm
CLT2401 Main 'T'		
For Gyptone D1 edge tiles.		3600
CLT24D101 Cross 'T'		
For Gyptone D1 edge tiles.		600
CLT15P01 Main 'T'		
For 1800mm Gyptone planks.		1830
CLT15P02 Main 'T'		
For 2100mm Gyptone planks.		2130
CLWA01 Wall Angle		
		3000
CLSM04 Shadowline Moulding		
Shadowline Moulding for Gyptone planks.		3000
CLC02 Wall Spring Clip	100	
For Gyptone D1 edge tiles.		-
CLC03 Perimeter Clip	100	
For E15 edge tiles.		-
E15 Casoprano Spacer Block	100	
		-
E24 Casoprano Spacer Block	100	
		-

[1] For further information of reference codes and abbreviations, refer to page 548.

Always use genuine branded British Gypsum components to qualify for **SpecSure**® lifetime warranty

Rigitone boards

Rigitone is a range of distinctive acoustic ceiling boards. With six individual patterns available, including regular and random design options, Rigitone acoustic ceilings offer the perfect combination of acoustic performance and creativity.

	Edge detail	Nominal size mm	Weight kg/m²
8/18			
Capable of achieving NRC up to 0.85, with regular 8mm perforations at 18mm centres giving a perforated area of 15.5%.	Square	1998 x 1188 x 12.5	10
10/23			
Capable of achieving NRC up to 0.85, with regular 10mm perforations at 23mm centres giving a perforated area of 15%.	Square	2001 x 1196 x 12.5	10
15/30			
Gives high levels of sound absorption with NRC up to 0.85, from the 15mm perforations at 30mm centres. Giving a perforated area of 19.6%.	Square	2010 x 1200 x 12.5	9.5
12-20/66			
A regular pattern of 12mm and 20mm perforations at 66mm centres combine to give an NRC of up to 0.90, and a perforated area of 20.2%.	Square	1980 x 1188 x 12.5	9.5
8-15-20			
The random pattern of 8mm, 15mm and 20mm holes forms a perforated area of 6%, which gives sound absorption performance combined with impact resistance. This makes the board suitable for extreme environments, such as indoor sports areas.	Square	2000 x 1200 x 12.5	10
8-15-20 SUPER			
The random pattern of 8mm, 15mm and 20mm holes give a perforated area of 10%, which gives a high level of sound absorption performance combined with impact resistance making the board suitable for extreme environments, such as indoor sports areas.	Square	1960 x 1200 x 12.5	10

Technical performance

- Acoustic performance
  - α_w up to 0.70 (LM)
  - NRC up to 0.90
  - Class C, D and E absorbers
- Class 0 / Euroclass A2-s1, d0
- Relative humidity 70%
- Ideal solution to Building Regulations Approved Document E
- Rigitone **8-15-20 SUPER** product ideal for sports halls
- Monolithic appearance
- Can be painted

NB A special procedure is used for fixing and jointing Rigitone boards. Detailed installation notes are given in the current British Gypsum **Ceilings Installation Guide**, available to download from www.british-gypsum.com

Products - Insulation

This section includes updated information, added since it was first published in July 2009. Please see the WHITE BOOK update document for details.
Last updated 21/01/2011

Isover insulation installed within a metal stud partition

Isover insulation

The world's leading manufacturer and innovator in glass mineral wool insulation, Saint-Gobain Isover manufacture and supply environmentally friendly thermal, acoustic and fire safe solutions for masonry, steel frame and timber constructions, tested and recommended for use in British Gypsum systems.

Environmentally sustainable insulation products

Isover glass mineral wool insulation is manufactured from a combination of silica sand and up to 80% recycled post-consumer glass from building regeneration projects or flat glass manufacture that would otherwise go to landfill. This makes Isover one of the most environmentally sustainable insulation products on the market today.

Isover glass mineral wool products boast:

- Zero ODP (Ozone Depletion Potential)
- Zero GWP (Global Warming Potential)
- A contribution towards the available credits in the following four key areas under the Code for Sustainable Homes; Energy and CO_2, Health and Wellbeing, Materials and Pollution
- Glass mineral wool insulation achieves an A+ rating under the Building Research Establishment (BRE) Green Guide to specification

Insulation product index

Isover APR 1200	561
Isover Acoustic Slabs	562
Isover ULTIMATE Piano Plus	562
Isover Sound Deadening Floor Slab	562
Isover Modular Roll	563
Isover Spacesaver Ready-Cut	563
Isover TS48 Slab	563
Isover RD35	564
Isover CWS	564
Isover Timber Frame Batts and Rolls	564
Isover Steel Frame Batt	565
Isover Steel Frame Infill Batts	565
Isover Cavity Barriers	565

Isover APR 1200

Characteristics

Euroclass A1 fire rating when classified in accordance with *BS EN 13501-1*. A proven high performance acoustic insulant, providing acoustic enhancement to British Gypsum warranted and performance related systems.

Application

British Gypsum metal stud partitions and wall lining. Timber stud partition, separating walls, and timber floors.

Thickness mm	Width mm	Length m	Pack area m²
25	2 x 600	20.00	24.00
50	2 x 600	13.00	15.60
65	2 x 600	10.00	12.00
75	2 x 600	12.20	14.64
100	2 x 600	9.17	11.00

Always use genuine branded British Gypsum components to qualify for **SpecSure**® lifetime warranty

Insulation

Isover Acoustic Slab

Thickness mm	Width mm	Length m	Pack area m²
50	600	1.20	11.52
75	600	1.20	7.20
100	600	1.20	5.76

Characteristics
Euroclass A1 fire rating when classified in accordance with *BS EN 13501-1*. Provides thermal and acoustic benefits in wall linings and partitions. Does not shrink, slump or consolidate in normal building applications.

Application
British Gypsum metal stud partitions and wall linings. Timber stud partition, separating walls, and timber floors.

Isover ULTIMATE Piano Plus

Thickness mm	Width mm	Length m	Pack area m²
60	2 x 610	12.00	14.64

Characteristics
Euroclass A1 fire rating when classified in accordance with *BS EN 13501-1*. High fire resistance at reduced weight.

Application
Integral component of British Gypsum's GypWall EXTREME impact and abrasion resistant partition system.

Isover Sound Deadening Floor Slab

Thickness mm	Width mm	Length m	Pack area m²
25	625	1.20	6.00

Characteristics
Mineral wool acoustic slab providing impact sound insulation in separating floors to meet Building Regulations Approved Document E performance requirements.

Application
Provides the mineral wool resilient layer in a type 3.1A timber base floor without the need for additional support to the walking surface.

Always use genuine branded British Gypsum components to qualify for **SpecSure**® lifetime warranty

Insulation

Isover Modular Roll

Thickness mm	Width mm	Length m	Pack area m²	R-value m²K/W
60	1200	15.50	18.60	1.40
80	1200	11.25	13.50	1.86
100	1200	9.17	11.00	2.33

Characteristics
Euroclass A1 fire rating when classified in accordance with *BS EN 13501-1*. Does not shrink, slump or consolidate in normal applications.

Application
Suitable for providing thermal and acoustic insulation in a variety of applications where a modular 1200mm width is required.

Thermal conductivity
λ 0.043W/mK.

Isover Spacesaver Ready-Cut

Thickness mm	Width mm	Length m	Pack area m²
100	2 x 580	9.17	10.64
	3 x 386	9.17	10.62
150	2 x 580	6.03	6.99
	3 x 386	6.03	6.98
200	2 x 580	3.88	4.50
	3 x 386	3.88	4.49

Characteristics
Euroclass A1 fire rating when classified in accordance with *BS EN 13501-1*.

Application
Suitable for providing thermal and acoustic insulation.

Thermal conductivity
λ 0.043W/mK.

Isover TS48 Slab

Thickness mm	Width mm	Length m	Pack area m²
50	600	1.20	5.76
75	600	1.20	4.32

Characteristics
Euroclass A1 fire rating when classified in accordance with *BS EN 13501-1*. Provides thermal and acoustic benefits in suspended ceiling systems. Does not shrink, slump or consolidate in normal building applications.

Application
British Gypsum suspended ceiling systems where additional acoustic absorption is required.

Always use genuine branded British Gypsum components to qualify for **SpecSure**® lifetime warranty

Isover RD35

Thickness mm	Width mm	Length mm	Pack area m²
35	455	1.20	6.55

Characteristics
Euroclass A2 fire rating when classified in accordance with *BS EN 13501-1*. Unique foil-faced mineral wool slab with high acoustic performance as proven by the stringent test regime of Robust Details Ltd, which RD35 passed for three separate specifications.

Application
Designed to give enhanced acoustic performance in masonry separating walls. Isover RD35 is an integral component of Robust Details E-WM-8, E-WM-14 and E-WM-15.

Isover CWS

Thickness mm	Width mm	Length m	Pack area m²	R-value m²K/W
50	455	1.20	10.92	1.39
65	455	1.20	8.74	1.81
75	455	1.20	8.74	2.08
85	455	1.20	6.55	2.36
100	455	1.20	6.55	2.78
125	455	1.20	4.37	3.47
150	455	1.20	3.28	4.17

Characteristics
Euroclass A1 fire rating when classified in accordance with *BS EN 13501-1*. Water-repellent, suitable for partial and full-fill applications. Does not shrink, slump or consolidate in normal building applications.

Application
Suitable for providing thermal insulation in a variety of different masonry external wall specifications.

Standards and certification
BBA approved.

Thermal conductivity
λ 0.036W/mK.

NB Hi-Cav 32 is available for enhanced thermal performance of the external cavity wall.
λ Thermal conductivity 0.032W/mK.

Isover Timber Frame Batts and Rolls

Thickness mm	Width mm	Length m	Pack area m²	R-value m²K/W
Frame Roll 35				
90	2 x 570	5.30	6.04	2.57
140	2 x 570	4.00	4.56	4.00
Frame Batt 32				
90	570	1.175	3.35	2.81
140	570	1.175	2.26	4.37
Frame Batt 35				
90	570	1.175	6.70	2.57
140	570	1.175	4.02	4.00
Frame Batt 43				
90	570	1.18	8.04	2.09
140	570	1.18	5.36	3.26

Characteristics
Euroclass A1 fire rating when classified in accordance with *BS EN 13501-1*. Does not shrink, slump or consolidate in normal building applications. Excellent acoustic performance.

Application
Batts and rolls suitable for use in timber frame external and party wall constructions. The products are self-supporting between the studs at 600mm centres and require no additional fixings. The batts are designed so that two batts, end to end, will fit frames of standard domestic storey height without the need for cutting.

Thermal conductivity
λ Frame Roll 35 = 0.035W/mK.
λ Frame Batt 32 = 0.032W/mK.
λ Frame Batt 35 = 0.035W/mK.
λ Frame Batt 43 = 0.043W/mK.

Always use genuine branded British Gypsum components to qualify for **SpecSure**® lifetime warranty

Insulation

Isover Steel Frame Batt

Thickness mm	Width mm	Length m	Pack area m²	R-value m²K/W
50	1200	1.20	57.6	1.56

Characteristics
Euroclass A1 fire rating when classified in accordance with *BS EN 13501-1*.
Provides thermal and acoustic benefits to external steel frame wall systems.

Application
Loadbearing - Metsec SFS external walls. Fixed to the outside of the metal stud with the foil face towards the cavity.

Thermal conductivity
λ 0.032W/mK.[1]

[1] Additional Low E cavity of 0.57m²K/W when adjacent to 25mm (minimum) unventilated airspace.

Isover Steel Frame Infill Batts

Thickness mm	Width mm	Length m	Pack area m²	R-value m²K/W
50	600	1.20	11.52	1.39
75	600	1.20	7.20	2.08
100	600	1.20	5.76	2.78

Characteristics
Euroclass A1 fire rating when classified in accordance with *BS EN 13501-1*. Provides thermal and acoustic benefits in external wall linings and partitions. Does not shrink, slump or consolidate in normal building applications.

Application
British Gypsum metal stud partitions and external wall linings. Friction fitted between studs with no additional fixings required.

Thermal conductivity
λ 0.036W/mK.

Isover Cavity Barriers

Width mm	Nominal Length m
For cavity sizes 50 - 65mm	
300	2.40
300	1.20
100	1.20
For cavity sizes 66 - 80mm	
300	2.40
300	1.20
100	1.20
For cavity sizes 81 - 100mm	
300	2.40
300	1.20
100	1.20

Characteristics
Provides up to 100 minutes fire resistance in concealed cavities.
Reduces flanking sound transmission in external wall cavities.
Simple acoustic and fire solution at 'T' junction details including timber frame. Three colour-coded sizes for ease of identification, as shown in table. 2.4m length available for full story height applications with no joints.

Application
Designed to restrict the spread of smoke and flames in concealed cavities, particularly within external masonry or timber frame walls. Will also help to comply with acoustic requirements as required by Building Regulations Approved Document E.

Self-adhesive version available to assist installation in steel frame buildings.

Always use genuine branded British Gypsum components to qualify for **SpecSure**® lifetime warranty

This section includes updated information, added since it was first published in July 2009. Please see the WHITE BOOK update document for details.
Last updated 05/07/2010

Glossary

Angle bead
A metal or plastic angle used to reinforce external corners, e.g. Gyproc and Thistle angle bead.

Backing coat
Undercoat plaster used as part of a two-coat plaster system, e.g. Thistle Hardwall.

Bonding agent
Liquid preparation applied to the wall or ceiling surface prior to plastering to provide adhesion to challenging backgrounds, e.g. ThistleBond-it.

Caulk
A joint sealing material, applied in a plastic state.

Closing-in
The operation of consolidating the surface of a final coat plaster with a finishing trowel.

Control joint
A joint which accepts movement in the form of lateral expansion or contraction. Allows relatively small movements to occur without damage to the internal surface.

Core board
A version of fire-resistant and moisture resistant plasterboard with square edges and green coloured paper liners supplied in 19mm thickness. Used as an inside stud (core) board in shaft wall systems, e.g. Gyproc CoreBoard.

Cove
A concave decorative moulding used at the wall to ceiling angle.

Cut end
End of a gypsum board showing the exposed core.

Decibel (dB)
A unit of magnitude for Sound Pressure, Sound Intensity, Sound Power and, in relation to Sound Insulation, the measurement of level reduction. Impact sound insulation, dB, is a measure of sound level.

Deflection head
A special design feature at the head of a partition, which allows its integrity to be maintained while allowing movement such as floor slab or beam deflection to take place.

Dew point
The temperature at which air becomes saturated with water vapour and below which condensation occurs.

Door set
A complete unit consisting of a door frame and door leaf or leaves, supplied with essential hardware as a product from a single source.

DPC
A damp-proof course (often abbreviated to DPC) providing a horizontal barrier in a wall designed to prevent moisture rising through the structure by capillary action.

Dry construction
A general term describing wall linings, ceiling linings, lightweight partitions and separating walls in board or sheet materials, either self-finished, plastered or jointed as distinct from construction with solid plaster finishes.

Drying shrinkage
Shrinkage caused by the evaporation of water.

Drylining
Creating a wall or ceiling lining using plasterboard as an internal finish instead of solid plaster treatment.

Drywall partition
Lightweight non-loadbearing construction, either self-finished, skimmed or jointed as distinct from masonry construction with solid plaster finishes.

Drywall
A partition, separating wall or wall lining which uses plasterboard as a lining instead of solid plastering (can be skim plastered however).

DSG
Desulphurised gypsum. A synthetic gypsum produced as a by-product of the desulphurisation process at coal-fired power stations.

Dual-purpose compound
Jointing compound suitable for use as a bedding compound and as a finishing compound in a jointing process, e.g. Gyproc Easi-Fill.

Edge profile of plasterboard
The bound edge of a plasterboard which is commonly square or tapered.

Edge bead
A metal or plastic strip to protect the edges of plasterboard or to form a feature, e.g. Gyproc Drywall Metal Edge Bead.

Efflorescence
Formation of crystals on a surface during drying, caused by the presence of soluble salts.

Expansion joint
A permanent joint between different parts of the structure to allow relatively small movements to occur without damage to the surface.

Face
The side of the plasterboard from which the covering paper is carried round the edges, e.g. the exposed side for direct decoration or plastering.

Feather-edge rule
Used for working angles or for closing-in an undercoat plaster after using a floating rule. It is made of wood or metal with one edge bevelled to a thickness of about 3mm.

Final set
The point at which the plaster mix permits no movement under the trowel.

Field of board
The face of plasterboard excluding the perimeter.

Finishing coat
The final coat in two or three-coat plasterwork, e.g. Thistle Multi-Finish.

Finishing compound
Jointing material applied over the bedding compound in one or more applications and which forms the final finished surface.

Fire door
A door that provides fire resistance.

Fire-resistant and moisture resistant plasterboard
A fire-resistant plasterboard with water repellent and other additives in the core, e.g. Gyproc FireLine MR.

Fire-resistant plasterboard
A gypsum plasterboard with greater fire protection properties than standard plasterboard, e.g. Gyproc FireLine.

Fixed partition
A partition that cannot be demounted without destroying, partially or totally, the integrity of the components.

Flanking sound
The structure-borne transmission of sound between adjacent rooms or spaces, which bypasses the obvious dividing barriers.

Float
Tool used in plasterwork to smooth and level the plaster surface.

Floating coat
The undercoat immediately preceding the final coat.

Floating floor
Part of a composite floor construction whereby the upper surface membrane (possibly a concrete screed or timber deck) is independently isolated (floated) from the lower structural floor by the use of a resilient underlay, an array of flexible pads, spring isolators or battens.

Framed partition
A partition consisting of a continuously supported frame with facings or infillings. It may take the form of a stud and sheet, frame and sheet or frame and panel partition, e.g. GypWall CLASSIC.

Furring
Timber or metal channels used to even-up a surface - on a wall for example, to provide a true surface to which plasterboards can be fixed, e.g. Gypframe MF10 Channel.

Glass mineral wool
Mineral wool manufactured from glass used for improved thermal or acoustic insulation, e.g. Isover.

GRG board
A gypsum board having a glass fibre reinforced core and continuous glass fibre membranes just below each surface, e.g. Glasroc F FIRECASE and Glasroc F MULTIBOARD.

Gypsum
Calcium sulphate dihydrate ($CaSO_4.2H_2O$). A natural mineral deposit and the main raw material from which gypsum products are made.

Gypsum adhesive
A gypsum-based compound that, when mixed with water, provides an adhesive for use in drylining systems, e.g. Gyproc Dri-Wall Adhesive.

Gypsum fibre board
A building board, complying with *BS EN 15283-2: 2008*, composed of gypsum, reinforced with fibres, e.g. Rigidur H.

Gypsum plank
Gypsum plasterboard 19mm thick and 600mm wide, e.g. Gyproc Plank.

Gypsum plaster, hemihydrate
Plaster, mainly of gypsum, from which approximately three-quarters of the water has been removed.

Gypsum plaster, pre-mixed lightweight
Plaster in which a lightweight aggregate has been pre-mixed dry with a hemihydrate gypsum plaster to give low density.

Gypsum plasterboard
A building board, complying with *BS 1230 / EN 520*, composed of a core of aerated gypsum plaster bonded between two sheets of strong paper, e.g. Gyproc WallBoard.

Hacking
The roughening of solid backgrounds by hand or mechanical means to provide a suitable key.

Hairline crack
Crack just visible to the naked eye.

Impact resistant plasterboard
A gypsum plasterboard with a heavier duty face paper, a higher density core than standard plasterboard, and additives in the core to improve impact performance, e.g. Gyproc DuraLine.

Impact sound
Sound produced when short duration sources, e.g. footsteps and door slams, impact directly onto a structure.

Independent wall lining
A lining (often using related partition components), which is erected independently of the external walling, e.g. GypLyner IWL.

Insulating drylining
Drylining using laminates composed of plasterboard and polystyrene, phenolic foam or mineral wool, e.g. Gyproc ThermaLine laminates.

Joint tape
Tape that is embedded in the bedding compound to reinforce the joint, e.g. Gyproc Joint Tape.

Jointing
The process of using hand or mechanical systems for achieving a flush seamless surface on dry construction, based on tapered edge plasterboard and applicable to walls and ceilings.

Key
The roughness of a surface that enables plaster to make a mechanical bond with it.

Lath
Expanded metal mesh that is fixed to a surface to provide a mechanical key for plaster.

Masonry partition
A partition of brickwork or blockwork complete with any specified surface finishes, such as a drylining or plaster.

Metal stud partition
A partition consisting of a metal stud / channel framework and lined both sides with sheet materials, such as plasterboard. This is a form of stud and sheet partition, e.g. GypWall CLASSIC.

Metal stud separating wall
A metal stud / plasterboard partition that meets the separating wall requirements of Building Regulations for multi-occupancy dwellings, e.g. GypWall QUIET.

Moisture resistant plasterboard
A gypsum plasterboard with moisture-repellent additives in the core, which is enclosed in water-repellent green coloured paper liners, e.g. Gyproc Moisture Resistant.

Nogging
Cross member between main members of a framed construction. Also known as a 'dwang'.

Noise
Unwanted sound resulting in distraction and disturbance, interference with speech and stress or damage to hearing.

Panel
Decorative or functional portion of the cladding of a floor, ceiling, roof or wall supported by a concealed or exposed frame.

Partition
A non-loadbearing vertical construction dividing space, e.g. GypWall CLASSIC.

Pattern staining
Surface staining that sometimes occurs when the two sides of a composite structure are consistently exposed to different temperatures.

Perforated ceiling
A ceiling incorporating tile or board products available in various edge profiles and with circular, square or rectangular perforations in random or regular pattern designs, typically used in suspended ceilings to provide sound absorption, e.g. Gyptone.

Performance partitions
Partitions that have enhanced sound insulation, fire resistance, impact resistance, or a combination of these, e.g. GypWall ROBUST or GypWall QUIET.

Perlite
A lightweight aggregate produced from siliceous volcanic glass, expanded by heat. Used as an additive in some backing coat plasters.

Plaster key
Portion of the plaster that is pressed through metal lath and, when set, holds the plaster layer in place. Also applies to the mechanical key produced by scratching a plaster undercoat.

Plenum
An enclosed chamber, e.g. space between a suspended ceiling and the floor above.

Pricking-up
The application of the first coat of plaster on metal lathing.

Racking resistance
A measure of a structure's ability to resist horizontal forces, such as wind loading.

Rendering coat
First coat of plaster on a wall.

Reverberation
The persistence of sound in an enclosure, due to its continued reflection or scattering from surfaces or objects, after the sound source has ceased.

Sarking board
Sheet material fixed to roof framework to contribute to weather protection, which may provide a degree of racking resistance.

Sealant
Joint sealing material, applied in a plastic state, e.g. Gyproc Sealant.

Security partitions
Constructions specifically designed to be resistant to ballistic and physical attack and explosions, such as those from letter or car bombs, e.g. GypWall SECURE or BlastWall.

Self-drilling, self-tapping
Shank and point design of a metal screw that facilitates penetration and grip into a light gauge metal section.

Shaft wall
A partition or lining used to form fire protective enclosures to all forms of shafts, including service cores and lift shafts. It consists of multiple layers of gypsum plasterboard fixed to single or twin metal frames to give fire resistance, e.g. ShaftWall.

Sheathing board
Sheet material used in framed structures. Fixed to external wall framework to contribute to weather protection, it may provide a degree of racking resistance.

Skin
A single thickness of panelling or cladding or one leaf of a cavity wall. Single skin or double skin are used to describe a lining consisting of one or two skins of plasterboard.

Soffit
Any semi-exposed under-surface.

Sound absorption
Sound absorption is the loss of sound energy when striking or transmitting into a boundary surface material or obstacle, or when causing a volume of air to resonate.

Sound leakage
Airborne sound transmission via gaps or cracks around or through building elements and services that allow sound to escape from one area to an adjacent area, and thus lower the element's potential sound reduction properties.

Square edge boards
Plasterboard with a square edge profile used for textured finishes or undecorated applications, as well as being suitable to receive gypsum plaster.

Staggered metal stud partition
A partition based on a framework with alternative studs off-set within wide floor and ceiling tracks. This system is used where increased levels of sound insulation are required. Performances are higher than those achieved with a single row of stud, but lower than with twin framed partitions, e.g. GypWall STAGGERED.

Stone wool
Mineral wool manufactured from stone, used to improve fire resistance performance.

Stud
Vertical member in framed wall or partition.

Suction
Moisture absorption of background.

Suspended ceiling
A ceiling formed with boards or tiles fixed into (or onto) a grid with a cavity between the suspension system and the structural soffit, joists or trusses, e.g. CasoLine MF.

Suspension system
Grid of metal sections, consisting of main and cross members, to support ceiling panels.

t&g
Tongue and groove (often abbreviated to t&g), a method of fitting similar objects together, edge to edge, is used mainly with timber constructions. Tongue and groove joints allow two sections to be joined together to create a single flat surface.

Tapered edge
A design of a board or sheet material applicable to plasterboard particularly, and to its long bound edges to enable flush seamless jointing or plastering to be carried out in dry construction.

Thermal laminate
A laminate consisting of gypsum plasterboard with a backing of factory bonded insulation material, providing enhanced thermal insulation. Used to provide insulated wall and soffit linings or ceilings, e.g. Gyproc ThermaLine laminates.

Three-coat work
Plasterwork with rendering, floating and finishing coats. Generally used when a very high quality finish is required.

Timber stud partition
A partition consisting of a timber frame lined on each side with materials such as plasterboard.

Undercoats
Gypsum plaster or cement render coats other than the final coat, e.g. Thistle Bonding Coat.

Vapour control plasterboard
A gypsum plasterboard backed with metallised polyester for wall and ceiling linings, which enables the lining and the vapour check membrane to be fixed in one operation, e.g. Gyproc WallBoard DUPLEX.

Vapour control layer
A material (usually a membrane) that reduces the transfer of water vapour through a building element in which it is incorporated.

Vermiculite
A lightweight aggregate produced from micaceous material exfoliated by heat.

Working time
The period during which a plaster mix is workable, i.e. does not significantly stiffen.

X-ray plaster
Plaster containing barytes (barium sulphate $BaSO_4$) as the aggregate, which gives protection or shielding from electro-magnetic radiation, e.g. Thistle X-Ray plaster.

This section includes updated information, added since it was first published in July 2009. Please see the WHITE BOOK update document for details.
Last updated 21/01/2011

Index

A

Access panels 546-550
AcouStuds 497
Acoustic braces 505
Acoustic hangers 505

B

Backing coat plasters - see Undercoat plasters
Basic principles of system design 14-57
Beads
  Drywall 533-534
  Plaster 538
BlastWall 231
Board accessories 528-534
Board Finish plaster 540
Board jointing components (metal) 504
Boards 506-521
Bonding Coat plaster 539
Bonding compound - see Dri-Wall Adhesive
Browning plaster 539
Building acoustics 23-34

C

'C' Studs 497
CasoLine CURVE system 316-323
CasoLine MF ceiling channels and accessories 499
CasoLine MF system 294-314
CasoLine GRID ceiling components 558
CasoLine GRID system 336-349
Casoprano tiles 555
Cavity fire barriers 400-405
Ceiling products 552-559
Ceiling and floor systems 294-377, 448-465
Channels 498-502
Collated Drywall Screws 523
Collated Drywall Timber Screws 524
Control Joint 534
CoreBoard 513
Corner Tape 532
Cornice 544
Cornice Battens 544
Cornice Strips 544
Cove 544
Cove Adhesive 544
CurveLyner Channel 502

D

Decorative effects 488-491
Decorative products 542-545
Deep Flange Floor & Ceiling Channels 499
Design - Basic principles of 14-57
  Building acoustics 23-34
  Fire performance 15-22
  Robustness 43-47
  Service installations 48-54
  Standards 55-57
  Thermal insulation and condensation 35-42
Dri-Coat plaster 539
DriLyner BASIC, TL, SI, MF, RF system 250-265
Dri-Wall Adhesive 531
Drywall Academy 10
Drywall Archbead 533
Drywall beads 533-534
  Drywall Metal Angle Bead 533
  Drywall Metal Edge Bead 533
  Drywall Plastic Edge Bead 534
Drywall Primer 531
Drywall Screws 523
Drywall Sealer 532
Drywall Timber Screws 524
Durafinish plaster 540
DuraLine 515
DuraLine MR 516

E

Easi-Fill 530
Easi-Fill 45 530
Ergo900 516
Extra Deep Flange Floor & Ceiling Channels 499

F

Fibre tapes - see tapes
Finishing systems and decorative effects 466-491
Finish plasters 540
  Board Finish 540
  Durafinish 540
  Multi-Finish 540
Fire performance 15-22
FireCase system 378-389
FireLine 511
FireLine DUPLEX 512
FireLine MR 512
FireStrip 531
FireWall system 232-239
Fixing channels 502
Fixings 522-526
FlameLyner components 503
FlameLyner system 286-292
Floor and ceiling systems 294-377, 448-465

G

Glasroc F fixing products 525
Glasroc F specialist board products 519-520
Glasroc F FIRECASE 519
Glasroc F FLAMELINE 520
Glasroc F MULTIBOARD 519
Glasroc F SOFFITLINE 520
Glasroc F FIRECASE Screws 525
Glossary 566-569
GypFloor SB 360-370
GypFloor SILENT channels and accessories 501
GypFloor SILENT system 350-359
Gypframe metal products 494-505
Gypframe fixing products 526
Gypframe steel angles 503
GypLyner channels and accessories 500
GypLyner ENCASE system 390-399
GypLyner IWL system 276-285
GypLyner UNIVERSAL wall lining system 266-274
GypLyner UNIVERSAL ceiling system 324-334
GypPrime 538
Gyprex tiles 554
Gyproc fixing products 522-525
Gyproc plasterboard accessories 528-534
Gyproc plasterboard products 506-519
Gyptone products
  Boards 556
  Tiles and planks 557-558

GypWall AUDIO system 190-201
GypWall CLASSIC system 66-98
GypWall CURVE system 100-105
GypWall EXTREME system 124-137
GypWall QUIET system 150-158
GypWall QUIET SF system 168-178
GypWall QUIET IWL system 160-166
GypWall RAPID dB Plus system 138-149
GypWall RAPID studs, channels and accessories 502
GypWall ROBUST system 106-123
GypWall SECURE system 226-230
GypWall STAGGERED system 180-188

H

HandiBoard 509
Hardwall plaster 539
Health and Safety 58-61

I

'I' Studs 498
Insulation 560-565
Insulation boards - see Thermal laminates
Introduction 8-13
Isover 560-565
- Acoustic Slab 562
- APR 1200 561
- Cavity Barriers 565
- CWS / Hi-Cav 32 564
- Modular Roll 563
- RD35 564
- Sound Deadening Floor Roll 562
- Spacesaver Ready-Cut 563
- Steel Frame Batt 565
- Steel Frame Infill Batt 565
- Timber Frame Batts and Rolls 564
- TS48 Slab 563
- ULTIMATE Piano Plus 562

J

Jack-Point Screws 524
Joint Cement 529
Joint Filler 529
Joint Tape 532
Jointing 472-478
Jointing materials 529-530

L

Laminates - see Thermal laminates
Loadbearing framed systems 416-465
  Steel frame 417-429
  Timber frame 440-446
  Timber stud 430-439
  Timber joist 448-465

M

Metal systems - see Systems
Moisture Resistant plasterboard 511
Multi-Finish plaster 540

N

Nailable Plugs 525
No-Coat 533

O

One-coat plasters 540

P

Parge - see SoundCoat
Partitions and wall systems 66-249, 430-439
Plank 509
Plaster accessories 536-539
Plaster Angle Bead 538
Plaster beads - see Beads
Plaster bonding agents
  GypPrime 538
  ThistleBond-it 538
Plaster Stop Bead 538
Plasterboard accessories 528-534
Plasterboards 506-521
Plaster skimming 466-471
Plaster systems 406-415
Plasters 539-540
Primers
  Drywall Primer 531
  Drywall Sealer 532
Products 492-565
Projection plaster 540
ProMix LITE Joint Cement 530
ProTape 539

R

Ready Mix Joint Cement 530
Rigidur H 521
Rigidur Screws 525
Rigitone boards 559
Robustness 43-47

S

Screws 522-527
Sealant 532
Security sheet 504
Service installations 48-54
ShaftWall starter channels and accessories 501
ShaftWall system 202-224
Skimming beads - see Beads
Skirting plates 504
SoffitLine system 372-377
Solid plastering beads - see Beads
Sound insulating bars 504
SoundBloc 513
SoundBloc MR 514
SoundBloc RAPID 514
SoundBloc RAPID MR 515
Soundcoat Plus 531
SpecSure® lifetime performance warranty 8
Staggered stud clips 505
Standard Floor & Ceiling Channels 498
Standards 55-57
Steel angles 503
Steel frame - Loadbearing 417-429
Steelwork encasement systems 378-399
Studs 497-498
Styletrims 545
Sustainability 62-65

Index - continued

Systems
- BlastWall 231
- CasoLine CURVE 316-323
- CasoLine MF 294-314
- CasoLine GRID 336-349
- Cavity fire barriers 400-405
- DriLyner BASIC, TL, SI, MF, RF system 250-265
- FireCase 378-389
- FireWall 232-239
- FlameLyner 286-292
- GypFloor SB 360-370
- GypFloor SILENT 350-359
- GypLyner ENCASE 390-399
- GypLyner UNIVERSAL wall lining system 266-274
- GypLyner UNIVERSAL ceiling system 324-334
- GypLyner IWL 276-285
- GypWall AUDIO 190-201
- GypWall CLASSIC 66-98
- GypWall CURVE 100-105
- GypWall EXTREME 124-137
- GypWall QUIET 150-158
- GypWall QUIET IWL 160-166
- GypWall QUIET SF 168-178
- GypWall RAPID dB Plus 138-149
- GypWall ROBUST 106-123
- GypWall SECURE 226-230
- GypWall STAGGERED 180-188
- Loadbearing systems 416-465
  - Steel frame 417-429
  - Timber frame 440-446
  - Timber stud 430-439
  - Timber joist 448-465
- Non-loadbearing timber stud 240-249
- Plaster systems 406-415
- ShaftWall 202-224
- SoffitLine 372-377

System warranty - see SpecSure®

T

Tapes
- Corner Tape 532
- Joint Tape 532
- ProTape 539

Thermal insulation and condensation 35-42
Thermal laminates 517-518
- ThermaLine BASIC 517
- ThermaLine PLUS 518
- ThermaLine SUPER 518

Thin Coat Angle Bead 538
Thin Coat Mini Mesh Bead 538
Thin Coat Plaster Stop Bead 538
Thistle plaster products 536-540
ThistleBond-it 538
Tiling 480-487
Timber frame - Loadbearing 440-446
Timber joist - Loadbearing 448-465
Timber stud - Loadbearing 430-439
Timber stud - Non-loadbearing 240-249
Tough Coat plaster 539
TriLine 517

U

Ultraflex 325 533
Ultratrim L 533
Undercoat plasters 539
- Bonding Coat 539
- Hardwall 539
- Tough Coat 539
- Browning 539
- Dri-Coat 539
- X-Ray 539

Universal One Coat plaster 540

W

Wafer Head Drywall Screws 524
Wafer Head Jack-Point Screws 525
Wall lining systems 250-292, 440-446
WallBoard 508
WallBoard 4TE 508
WallBoard DUPLEX 510
WallBoard TEN 510
Warranty - see SpecSure®

X

X-Ray plaster 539

BUSINESS SUPERBRAND SINCE 2008

Mixed Sources
Product group from well-managed forests and other controlled sources
www.fsc.org Cert no. TT-COC-002626
© 1996 Forest Stewardship Council

Gyproc, Thistle, Gypframe and Glasroc are all registered trade names of BPB United Kingdom Limited. Isover is a registered trade name of Saint-Gobain.

Proprietor: BPB United Kingdom Limited registered in England 734396, registered office Saint-Gobain House, Binley Business Park, Coventry, CV3 2TT, UK.

British Gypsum reserves the right to revise product specifications without notice. The information in this document was correct to the best of our knowledge at the time of publication. It is the user's responsibility to ensure that it remains current prior to use.

The information in this document is for guidance only and should not be read in isolation. Users should read and familiarise themselves with all the information contained in this document and ensure that they are fully conversant with the products and systems being used, before subsequent specification or installation.

For a comprehensive and up-to-date library of information visit the British Gypsum website at: www.british-gypsum.com

Technical enquiries
British Gypsum
Drywall Academy
East Leake
Loughborough
Leicestershire
LE12 6HX

Telephone: 0844 800 1991
Fax: 0844 561 8816
Email:bgtechnical.enquiries@bpb.com

Training enquiries: 0844 561 8810

www.british-gypsum.com

FM 52358

British Gypsum July 2010 WB-09